Markers, printers, software
Catalogue 2017/2018
Let's connect.

Industrial marking system

Weidmüller

Dear Customers,

The PDF versions of our catalogues offer practical additional functions, helping you to find your way around our product range and simplifying the ordering process.

In addition to the catalogue, the PDF also contains:

- Internal page links
- Links to the online catalogue

Try it out for yourself. Click the order number to obtain more detailed information and close-up images via you web browser. The links in the PDF file also enable you to go directly to the next desired catalogue page.

Further Weidmüller product catalogues can be accessed by clicking the following:

Markers, printers, software
Catalogue 7

Markers, printers, software

Introduction

Software

Terminal markers

Wire and cable markers

Device markers

Marking systems

Appendix

Weidmüller Solutions & Service

Index Index Type / Index Order No.

Software M-Print® PRO

M-Print® PRO
Page B.2

Optimal project creation
Page B.3

Continuous labelling
Page B.4

Double-sided labelling
Page B.5

Fill functions
Page B.6

Data transfer
Page B.7

Graphics, bar codes and symbols
Page B.8

Layout options
Page B.9

Drawing functions and scale labels
Page B.10

M-Print® PRO eCAD software
Page B.11

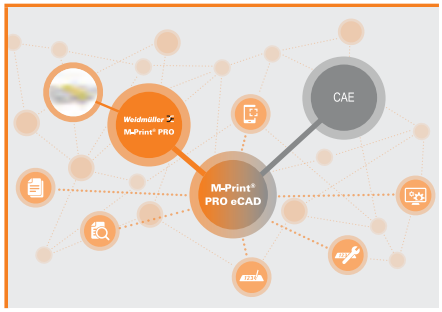

Terminal markers

DEK card
Page C.10

DEK MultiCard
Page C.12

WS MultiCard
Page C.20

ZS MultiCard
Page C.36

MF MultiCard
Page C.40

WAD MultiCard
Page C.80

Tag carriers
Page C.84

ELS MultiCard
Page C.90

Dekafix and WS
Page C.94

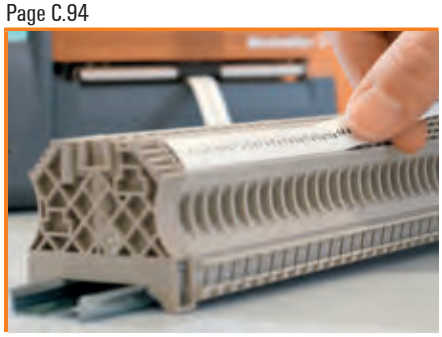

Wire and cable markers

SF/SFR MultiCard
Page D.6

SFX MultiCard
Page D.8

SFC MultiCard
Page D.10

TM-I MultiCard
Page D.12

Transparent sleeves
Page D.14

ELS MultiCard
Page D.18

WKM transparent sleeve
Page D.20

MetalliCard
Page D.24

MultiMark
Page D.28

MultiMark shrink sleeve
Page D.32

WriteOn cable labels
Page D.40

CableLine® CLI C
Page D.46

CableLine® CLI O
Page D.78

CableLine® CLI M
Page D.84

WSM stainless steel markers
Page D.94

Cable ties
Page D.98

Device markers

DMC MultiCard
Page E.6

ESG MultiCard
Page E.8

SM MultiCard
Page E.26

CC MultiCard
Page E.36

Tag rails
Page E.44

MetalliCard
Page E.48

Labels MultiMark and THM
Page E.60

KSW – Labels
Page E.72

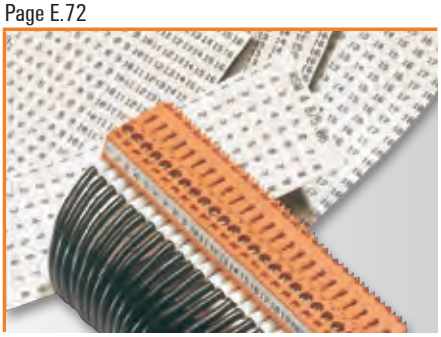

Marking systems

PrintJet ADVANCED
Page F.6

MCP Plus 2
Page F.10

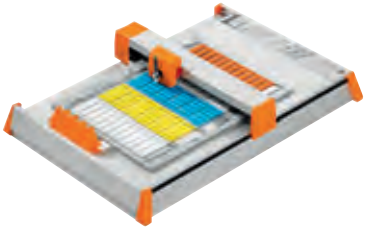

MCP Basic 2
Page F.12

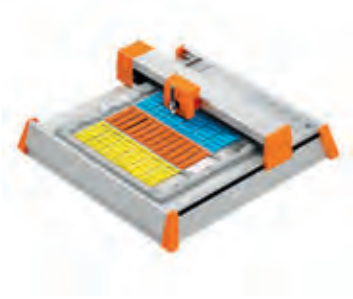

THM MMP
Page F.14

THM Plus M
Page F.16

THM TwinMark
Page F.18

Introduction

Introduction	Systemised marking	A.2
	Colour coding with PrintJet ADVANCED	A.4
	Materials	A.6
	Weidmüller tests and test procedures	A.8
	Reasons to choose MultiCard	A.10

Systemised marking
for optimised processes

Our co-ordinated complete system

Professional, industrial marking in line with the IEC 60204-1 standard is essential for faultless operation and reliable maintenance of industrial facilities. Weidmüller calls this "systemised marking" and offers more than the norm: a perfectly co-ordinated product range for optimised processes.

Software: intuitive to use and tailored to your requirements. Import, edit and manage data with ease with the M-Print® PRO software.

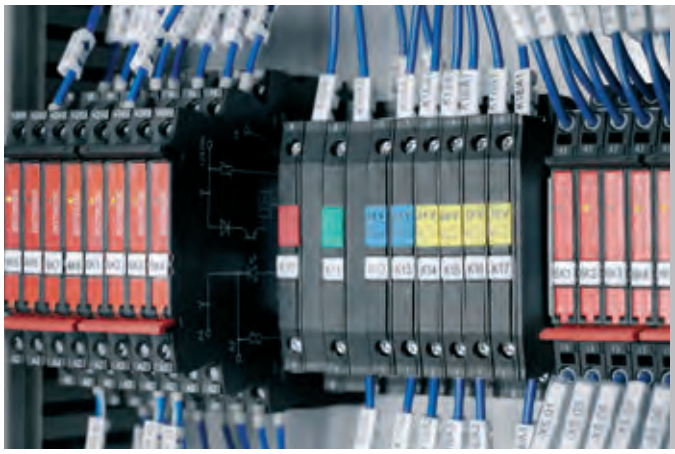

Do you need marking systems for a whole range of different applications?
Our all-in-one solutions are intelligent and display real future viability: convenient data organisation, intelligent functions and marking conforming to standards make our systems unique.

Your marking needs

One of the main requirements of a marking system is that it clearly shows how your components are configured. This includes a precise print image, convenient handling and the guarantee of usability in an industrial environment. The software should provide optimum support during data entry and management. During marker output, the speed should be adapted to your needs.

Markers: constructive solutions for all cabinet-related applications. From the shrink sleeve to the metal marker.

Printers: laser, ink or thermal transfer. Industrial printing systems for every requirement. Designed with one eye on the future to suit your requirement profile

The marking result

You will be won over by marking systems from Weidmüller. We don't just offer you a complete, convenient process chain from data entry to ready-for-use markers for your individual cabinet configuration. We offer you marking solutions that are already geared towards the future requirements of progressive automation. This means you are one step ahead of state-of-the-art!

Colour coding, only with PrintJet ADVANCED

Relevant standards specify the need for colour coding in order to clearly identify different components, such as wires or push buttons. Coloured markings can be applied accurately and securely with the PrintJet inkjet printer from Weidmüller, which has a highly superior colour-printing capability.

The marking of components, sub-assemblies, devices, wires and connectors within your electrical system means that you will have clear identification throughout its entire life cycle. As a result, service and maintenance work is made significantly easier and potential faults can be quickly located and immediately eliminated.

Clear identification of electrical equipment and systems is obligatory, as defined in relevant standards such as DIN EN 60204-1, entitled "Safety of machinery - Electrical equipment of machines - Part 1: General requirements". To ensure that the markings have the best visibility, these and other standards recommend colour coding, in most cases.

Fast and accurate recognition of warning and hazard information through colour coding

In contrast to black and white printing, colour coding enables faster and more accurate recognition of the type of information that the marking is in place to convey. This is of particular significance when it applies to warning and hazard information. For example, due to its colour symbolism, the colour red indicates: "Warning – there is a possible hazard here". Accordingly, DIN EN 60204-1 states that "the colour RED [...] shall be used for EMERGENCY STOP and EMERGENCY OFF controls". Other colours, such as yellow, blue or green, are specified for various other conditions. In addition to the compulsory colour coding, the standard recommends "identifying push buttons in the vicinity of the control panel, or preferably directly on the control panel, with [corresponding] symbols [...]" to prevent any confusion.

"Wherever colours are used to identify wires, use of the colour throughout the length of the wire is recommended, either through the colour of the insulation or through coloured markings at regular intervals, at the ends, or in accessible locations." (DIN EN 60204-1). Again, defined colours are specified for certain types of conductor in this case, e.g. green/yellow for PE wires or light blue for neutral wires.

High definition and in colour

In these cases, where colour coding is required, you will benefit from the unique characteristics of our PrintJet ADVANCED inkjet printer which delivers high-definition, colour printing of texts, frames, lines, graphics, barcodes, serial numbers and photos. The major advantage is that only white markers are needed and that they can be printed with a total of 256 different colours. A marker can be printed using any number of different inks, without having to use individual matte colours. M-Print® PRO, our software for printing and ordering labels and markers, can be used

to fully customise each marker before printing it with the PrintJet ADVANCED printer.

This system requires significantly fewer article numbers than when using colour markers, which are often only available as special orders. The effort involved in ordering and stocking is therefore considerably reduced. This enables standard-compliant coding in a time-saving and cost-efficient manner - for fast and accurate identification.

Overview of particular standards which specify or recommend colour coding:

- **DIN EN 60204-1** (Safety of machinery - Electrical equipment of machines - Part 1: General requirements)
- **IEC 60445** (Identification of equipment terminals, conductor terminations and wires)
- **IEC 60446** (Basic and safety principles for man-machine interface - Identification of wires by colours or alphanumerics)
- **DIN EN 50174-2** (Information technology - Cabling installation - Part 2: Installation planning and practices inside buildings)

Materials

Material	Thermal, mechanical characteristics	Chemical characteristics
Polyamide 66 (PA), UL 94-V2	Hard, rigid, abrasion-resistant halogen-free, –40 °C...+100 °C	**Resistant to:** oils, benzine, benzene, alkalis, solvents, chlorinated hydrocarbons, esters and ketones **Not resistant to:** ozone, hydrochloric acid, sulphuric acid, hydrogen peroxide
Polyethylene LD (PE), UL 94-HB	Soft, cold-resistant to –40 °C, impact-resistant, unbreakably rigid, transparent to opaque halogen-free, –40 °C...+80 °C	**Resistant to:** acid, alkalis, solvents, alcohol, benzine **Not resistant to:** aromatics, chlorinated hydrocarbons
Polyvinyl chloride, hard (PVC), UL 94-V0	Hard, rigid, transparent to opaque –50 °C...+80 °C	**Resistant to:** acid, alkalis, oils, greases, benzine **Not resistant to:** benzene, ketones, esters and stain removers
Polyvinyl chloride, soft (PVC), UL 94-V0	Hard, rigid, transparent to opaque –40 °C...+80 °C	**Resistant to:** acid, alkalis, oils, greases, detergents **Not resistant to:** benzene, esters and chlorinated hydrocarbons
Polypropylene (PP)	Hard, rigid, transparent to opaque –40 °C...+80 °C	**Resistant to:** acid, alkalis, saline solutions, alcohol, oil **Not resistant to:** chlorinated hydrocarbons
Polyolefins	Shrinkage rate 2:1 > 90°C halogen-free, –55 °C...+105 °C	**Resistant to:** acid, alkalis, solvents, alcohol, benzine **Not resistant to:** aromatics, chlorinated hydrocarbons, diesel
	Fire-retardant Shrinkage rate 3:1 > 90°C –55 °C...+135 °C	**Resistant to:** acid, alkalis, solvents, alcohol, benzine, saline solutions, alcohol, oil **Not resistant to:** aromatics, chlorinated hydrocarbons, diesel, chlorinated hydrocarbons
Polyoxymethylene (POM)	Hard, rigid, impact-resistant to –40 °C, unbreakable, high dimensional stability in heat, high abrasion resistance, low moisture absorption –40 °C...+80 °C	**Resistant to:** weak acids, weak alkalis, benzene, benzine, alcohols, oils **Not resistant to:** strong acids and strong alkalis
Vinyl-coated cotton fabric	Halogen-free –29 °C...+80 °C	**Resistant to:** good resilience to water, oils and various solvents as well as alcohols and benzine
Polyester material UL 94 -HB	Halogen-free –40 °C...+150 °C	**Resistant to:** very good resilience to water and weathering effects, good resistance to petroleum-based solvents, moderate resistance to esters and ketones, very good resistance to UV radiation
Polyurethan	Flexible –40 °C...+90 °C	**Resistant to:** alcohols, solutions of organic salts, aromatic hydrocarbons, mineral oil, greases **Not resistant to:** acid, alkalis and chlorinated hydrocarbons
Polyvinyl fluoride	Dimensionally stable, abrasion-resistant, thermally stable –40 °C...+140 °C	**Resistant to:** very good resilience to water and weathering effects, good resistance to petroleum-based solvents, moderate resistance to esters and ketones, very good resistance to UV radiation

Material	Thermal, mechanical characteristics	Chemical characteristics
Stainless steel 1.4301		The 1.4301 steel is resistant to water, water vapour, humidity, food acids, as well as weak organic and inorganic acids and offers a range of diverse applications, e.g. in the foodstuff industry, in beverage production, in the pharmaceutical and cosmetic industry or in chemical equipment
Stainless steel 1.4404		The 1.4301 steel is resistant to water, salt water, chlorine-containing media, water vapour, humidity, food acids, as well as weak organic and inorganic acids and offers a range of diverse applications, e.g. in the foodstuff industry, in beverage production, in the pharmaceutical and cosmetic industry or in chemical equipment engineering.
Aluminium		Protected through passivation to protect reactions with air or water at room temperature. Inexpensive and light alternative to stainless steel.

Weidmüller tests and test procedures

Tests	Test conditions/requirements
Materials test	Flammability in accordance with UL 94 Shore A hardness test A – ISO 868 Surface resistance – DIN IEC 60093
Ageing	All marker materials are tested for their ageing resistance. Tested to Weidmüller test specifications.
Function test of PTFE and PVC wire insulation	Suitability of markers for installation at temperatures between –10 °C to +40 °C. Correct attachment test of the respective marker size for the smallest to the largest wire diameter.. Tested to Weidmüller test specifications.
Vibration resistance on carrier	Vibration test, industry, in accordance with: DIN EN 60068-2-6, sinusoidal (3 axes, 10 cycles per axis, acceleration 5g, frequency 10-500 Hz, sweep rate 1 octave/minute) Tested to Weidmüller test specifications.
Wipe resistance	Resistance of the print against the effects of hand perspiration, machine oil, water and ethanol. A slight alteration is permissible; however, clear identification (legibility) must be guaranteed. In the case of printing subject to VDE 0611 pt 4 (rating plate details), the wipe resistance against water and mineral spirits is to be tested for a period of 15 minutes. Standards: DIN VDE 0611-4 / Pt. 3.1.3 DIN EN 60947-1/ Pt. 5.1 DIN EN 60742, CEI 16-7 Tested to Weidmüller test specifications.
Scratch resistance	No scratches may be visible on the base or the carrier following the fingernail test. A slight alteration is permissible; however, clear identification must be guaranteed. Tested to Weidmüller test specifications.
UV light resistance	The function must be guaranteed. The print or colour of the product must be clearly recognisable. Standard: DIN EN ISO 4892-2; Tested to Weidmüller test specifications.
Chemical resistance of the print	Tested to Weidmüller test specifications.

We would like to point out that the described test procedures are implemented depending on type and application. Owing to the sheer number of possible applications and environmental influences such as moisture, radiation, gases or heat/cold to which the products can be exposed, Weidmüller accepts no liability for the suitability of products in all customer applications. Suitability tests for specific applications must therefore be carried out by the customer. However, Weidmüller will be happy to provide help and advice upon request.

Due to the different identification system available on the market, we wish to point out that Weidmüller does not guarantee industrial identification products if the Weidmüller components (markers – transparent sleeves – ink/toner/colour ink ribbons – printing systems) are combined with third-party products, unless Weidmüller has explicitly agreed for the purpose of an individual application.

Reasons to choose MultiCard

The perfect marking solution for every application

The complete, user-friendly marker range to meet all your needs.

From the planning phase of a marking project to final assembly, the MultiCard range has over 270 markers to meet all application levels and identification processes. Thanks to the excellent compatibility of the system components, you can always find the right solution for your connector, conductor, cable or device markings, even when it comes to more complex electrical cabinet systems. When a MultiCard marker is designed, the user is the focal point. All the mounting options and processes are therefore included in the design of the system elements. You can also keep an overview and act in a timely fashion due to the information on the project description areas and using the storage option in the circuit diagram folder. The exceptionally smudge-resistant and intense colour printing means that you can achieve maximum efficiency in diverse areas of application.

Using PrintJet ADVANCED, you can print your markers with non-fading four-colour print – customised with graphics, company logos, warning notices and much more.

The project marker surface is the place for assembly relevant information, which enables you to quickly identify the correct installation location.

MultiCard markers are halogen-free and resistant to many chemicals. Their high-quality design means that they are suitable for the most demanding applications areas, such as transportation and building technology.

Control Unit Solar
Control Unit Solar

Software

Software	M-Print® PRO	B.2
	Optimal project creation	B.3
	Continuous labelling	B.4
	Double-sided labelling	B.5
	Fill functions	B.6
	Data transfer	B.7
	Graphics, bar codes and symbols	B.8
	Layout options	B.9
	Drawing functions and scale labels	B.10
	M-Print® PRO eCAD software	B.11
	Technical data	B.12

M-Print® PRO

Individual options for the greatest ease of use

Creating markers with intuitive software

Using M-Print® PRO software, you can create your labelling for all identification-relevant applications in a timely and application-specific manner and without having to rely on external service providers. You have the option of printing the markers yourself, using our industrial printers, or you can order them from us via e-mail.
A comprehensive product catalogue means you can edit all neutral markers (MultiCards, inlay tags, labels and heat shrinks from the Weidmüller range).

Key benefits of M-Print® PRO

- Tailor-made: edit marker templates or create your own design in a free layout
- Reproducible: stored templates reduce your workload
- Clear: simple assignment due to the additional information on the project marking area
- Multilingual: software, online help and manual are available as standard in German, English, Spanish, French, Italian, Swedish, Czech, Polish, Russian, Hungarian, Chinese, Portuguese, Brazilian Portuguese, Dutch, Norwegian, Danish, Finnish, Japanese, Korean and Turkish.
- You choose: network and local installation are possible
- For ordering issues, just start the online version from the Weidmüller homepage.

Perfect for B2B: The M-Print® PRO software and its manual and online help system is available in 20 major business languages.

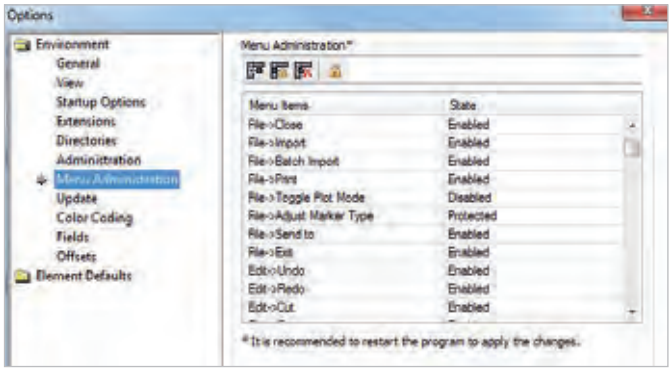

User-specific, saved menus in standard and expert modes ensure efficient work flows and continuity. Password protection prevents unwanted access to special functions.

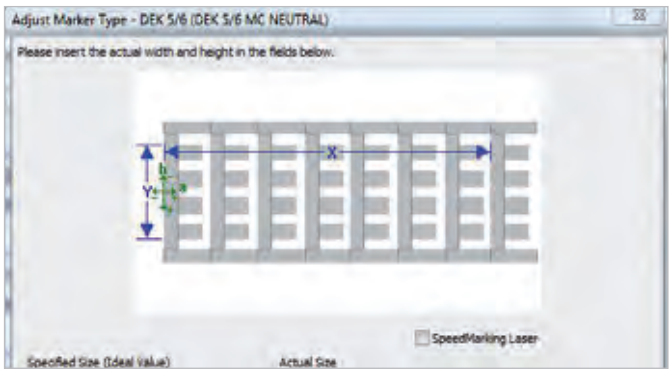

Flexible management of the printing parameters for multiple users and for various printing systems.

Optimal project creation
Flexible editing and printing

Project-oriented marker creation can also be ordered

Requirements for complex project tasks with different types of markers and printing parameters, which might be found in electrical cabinet marking, for example, can be selected, stored and transmitted in one project file. The complete data records will be printed exactly as requested on system printers, without errors and in the correct sequence. They can also be reproduced for future ordering processes by the creation of templates. The order function within our M-Print® PRO software gives you the advantages of internal marker creation and the high-quality output on Weidmüller's marking systems with just one click. This software solution for ordering direct, via e-mail, is particularly suitable for companies wanting professional standards but low quantity requirements for their MultiCards.

Key benefits when creating a project

- Process-optimised: marker selection, printer type mapping and data transmission in one program
- Professionalism: project-based editing for electrical cabinet marking, for example
- Reliable: error-free data transfer through co-ordinated system components

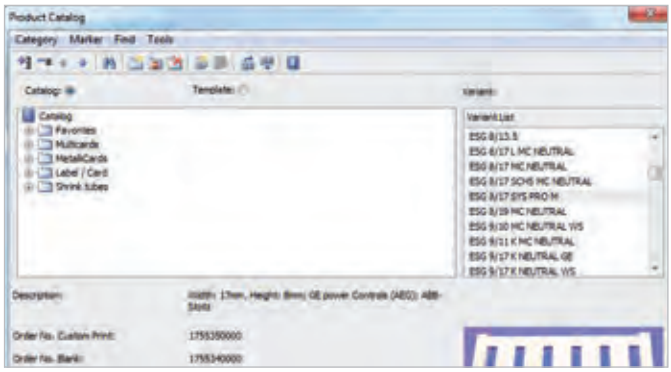

To efficiently create a project, the product catalogue of all the marker types along with application information and a product photograph are available. You can get up and running quickly, using the integrated search function or by sorting according to printer type.

Easily manage complex projects:
the different marker types in an electrical cabinet project are created, printed or ordered in a pre-determined order.

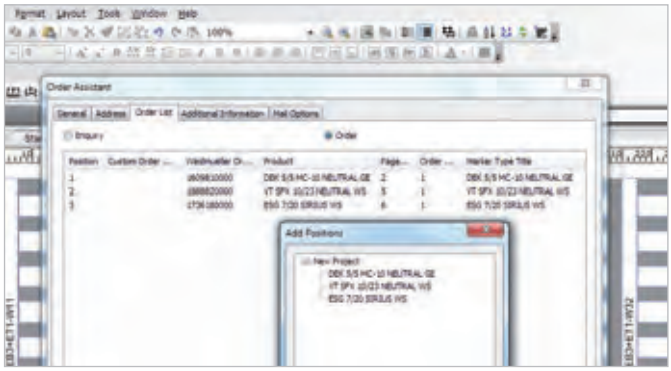

It makes sense for smaller amounts: low labelling requirements can be ideally covered through the order service. Here, the order is created and executed by the customer and is free from transmission errors or data loss.

Continuous labelling

The right format for every application

Dynamic pitch widths for application-specific, continuous labelling

When formatting continuous strips and sleeves, you have all the tools you need for individual labelling in the M-Print® PRO software. The configuration screen for continuous material gives the framework for the systematic use of dynamic pitch widths for the individual termination points. Variable crop marks complete the assorted possibilities, so that the result for every print job is a format-specific separation of individual markers, or for whole pages.

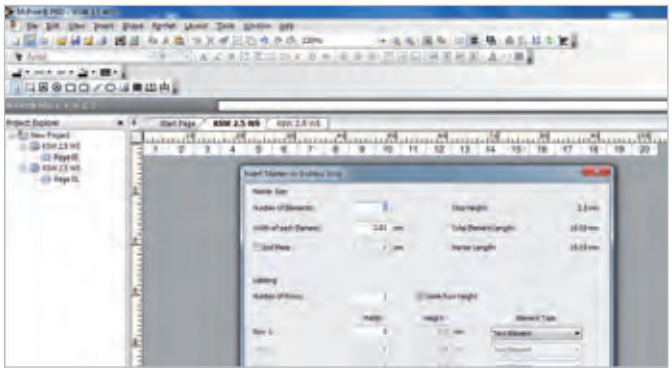

The project-based configuration screen allows you to consider dynamic pitch widths – even with multi-line labelling. You can perform further editing in the marker layout or in the data grid.

Key benefits of continuous printing

- Cost efficient: printing complete continuous strips in different formats
- Efficient: the systematic cuts of the printed output simplifies the further processing of the marker

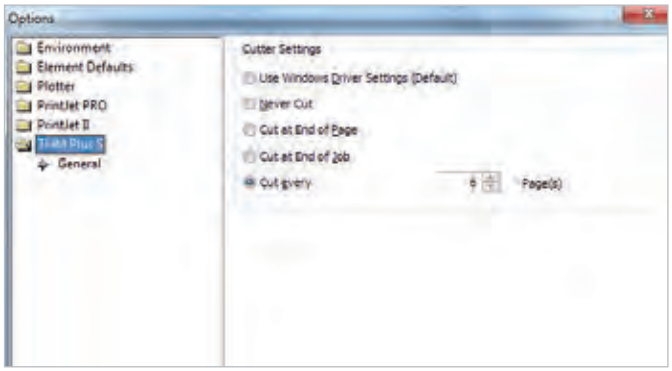

Separation requirements are definable using variable cutting possibilities.

Double-sided labelling

Clear layout for the front and back sides

Both shrink sleeve sides on one editing screen

The excellent processing properties of shrink sleeves are further enhanced for labelling with M-Print® Pro software. The editing screen, specifically designed for these markers, gives you the front and rear sides in a single template, allowing you to easily edit individual printing. When both sides need to be printed with identical text, the user-friendly data synchronisation order option saves you even more time.

Key benefits of double-sided printing

- Clarity: both printing sides can be viewed from one editing screen
- Variable: each shrink sleeve side can be printed with different or identical markings
- Practical: import marking text from other programs or input the text, using data synchronisation

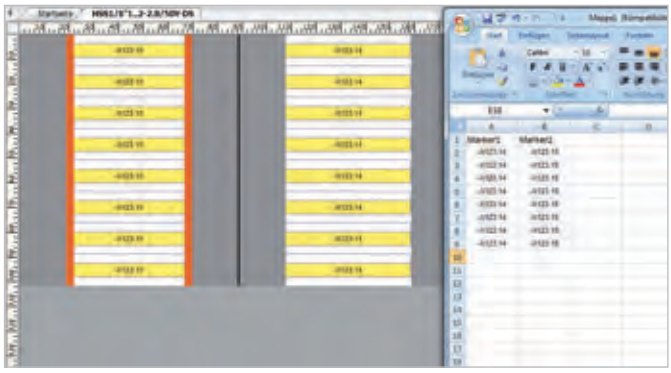

Using the individual text editing, or data transfer from imported files, you can label both sides of the shrink sleeve as desired.

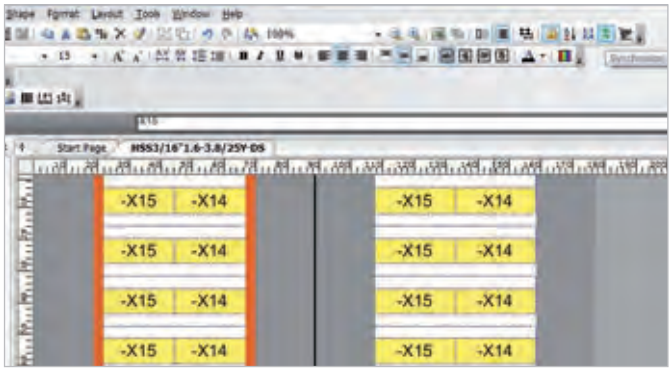

If both sides are to be marked identically, the data synchronisation function takes the text already edited for the front side and transfers it quickly and without errors to the rear side.

Fill functions

Easy-to-use editing for rows and sequences

Manage numbering and text sequences in a content-compliant way

Do your marking requirements consist of repeated or identical information for different applications? Then the auto-fill function is the perfect tool to automatically and sequentially number text and number series. In addition, pre-defined text sequences can be edited without errors, or number values can be increased or decreased step-by-step.

Your advantages from the fill functions

- Transferable: generate consecutive numbering by functions
- Callable: simple insertion of pre-defined sequences of text
- Clever: increase/decrease at the push of a button

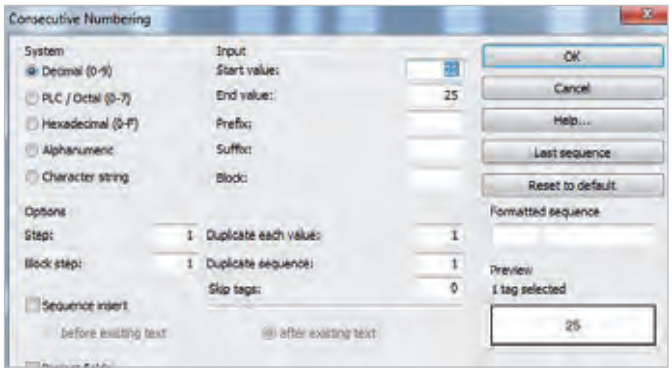

System-specific defined types of numbering which can be combined with text sequences are available in the consecutive numbering function. A preview shows the results beforehand.

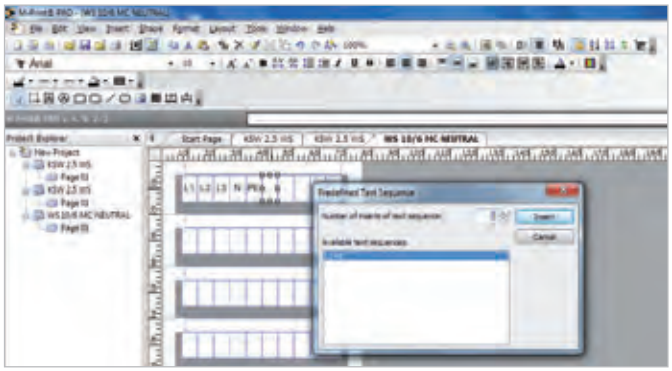

Non-logically connected text can be pre-defined as a text sequence and inserted in a block onto the markers.

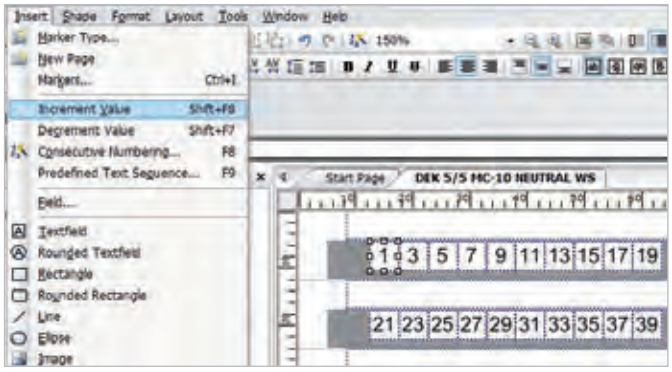

You can increase or decrease run sequences by keyboard shortcuts or via the menu. Step sizes can be adjusted if needed.

Data transfer
Process-optimised import functions

Accepting different file formats

To finalise a project, files in different formats are often created from a whole host of separate software types. These need to be processed through a single system. These compatibility requirements were considered during the development of the M-Print® PRO software, and implemented using import functions for the various file formats, as well as CAE interfaces. If needed, the import assistant function generates a script and using this, all similar transfers can be done routinely. Not only is the label data used but also the information about the type of marker to be used.

Key benefits of data transfer

- Resource optimised: use existing data for optimum processing times
- Simple: defined import steps for routine operations
- Controlled: sorting and filtering functions process data according to the application

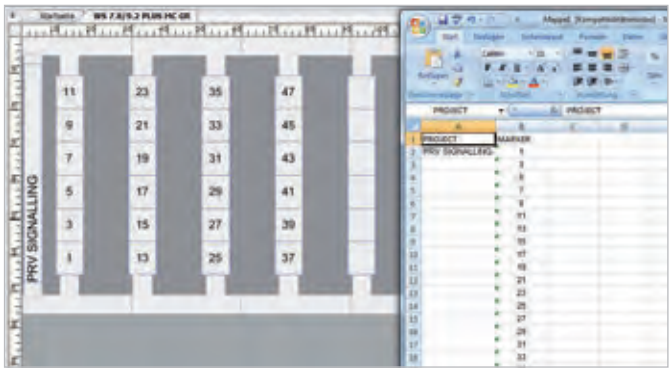

Excel formats can be opened and imported or directly taken into the M-Print® PRO software via OLE (Object Linking and Embedding). Nothing is simpler.

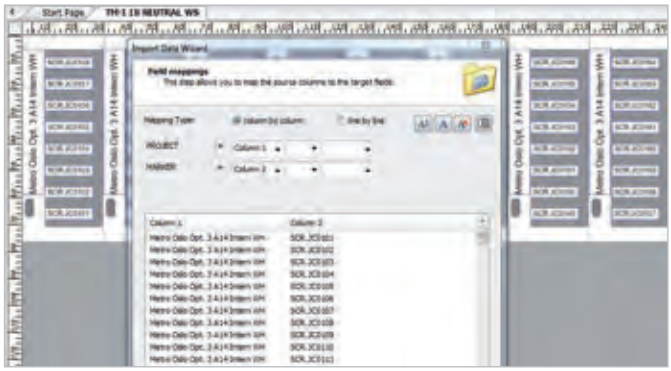

Import scripts are defined once, using the import assistant and ensure a quick and error-free data transfer for future projects. Batch import gives you further process optimisation.

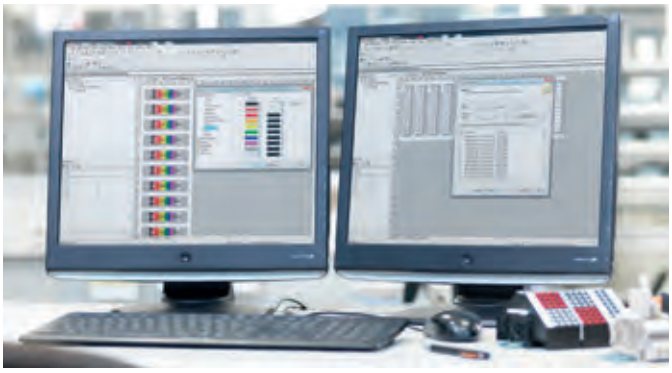

CAE data transfer is a simple data assumption, this reduces the workload as well as avoiding transfer errors. Special interfaces are available for different eCAD software.

Graphics, bar codes and symbols

Complex design possibilities for elaborate marking tasks

Extensive graphic functions give unlimited possibilities

Using the M-Print® PRO text and graphic functions, you have applications which are essential for special labelling needs. Many symbols, graphics and bar codes are available for immediate transfer onto the marker's printing. Or you can simply create your own layout using your own graphics, like your company logo. Just as simple is the import of files from external sources as M-Print® PRO software supports all common graphic formats. You always have the right tools for your graphical solution to hand.

Key benefits

- Maximum choice: comprehensive graphic editing tools for individually created markers
- Compatible: supports a wide variety of graphic formats
- Professional: create plotter compatible formats in the symbol editor

Different EAN bar codes, QR- and DataMatrix codes can be created with M-Print® PRO.

Standard graphic formats can be easily incorporated: M-Print® PRO supports BMP, EMF, GIF ICO, JPG, as well as PNG, WMF and TIFF.

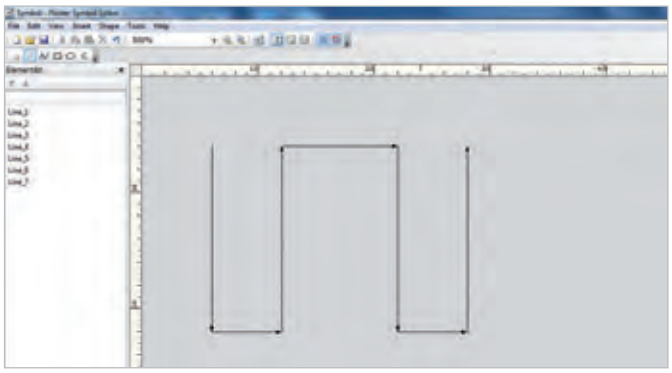

You can simply and quickly create symbols using the symbol editor which can also be output to plotters.

Layout options

Circular text, colour coding and multi-level terminals

Expert applications with simple user guidance

Whether standard functions or more complicated capabilities, the M-Print® Pro offers you intuitive software with astute user prompting, even with complex menu applications. Layouts in circular text, with 45° rotation steps for badges, colour coding for flexibly marking cable markers, as well as data sets for marking multi-level terminals with a sorting function, are some of the examples of the comprehensive menus for special layouts. In just a few steps, you have access to all the application-specific functions that you need for a requirement-defined creation of special marking projects.

Key benefits from the layout options

- Needs oriented: application-specific options
- Concise: program-side defaults for standardised markings
- Exact: optimum usage of space thanks to the automatic re-sizing with the overflow filter
- Specific: functions for circular text, colour codes and multi-level terminals

The ability to edit circular printing areas means that marking of hydraulic hoses, lights in accordance with DIN V VDE V 0108.100, cam controllers or dial labels can be prepared simply and quickly.

The colour coding option can be used to mark cables and wires with the international resistor colour code. Here, the colours can be optionally adjusted to match background and text.

Using the multi-level terminals program function means that data records for strip labelling can be sorted, as required. The number of levels is specifically taken into account for this purpose.

Drawing functions and scale labels

Precise information arrangement

The variable parameter definitions for type labels

A substantial amount of information is required to uniquely identify equipment and must be placed on type labels in a clear and standards-compliant arrangement. To easily deal with this labelling requirement, M-Print® PRO offers numerous drawing functions which enable you to simply create linear and circular scales, as well as all other application-relevant text and graphics. The precise arrangement of the markings is done using individually configurable pitch, value and text parameters, as well as with scale marks and text.

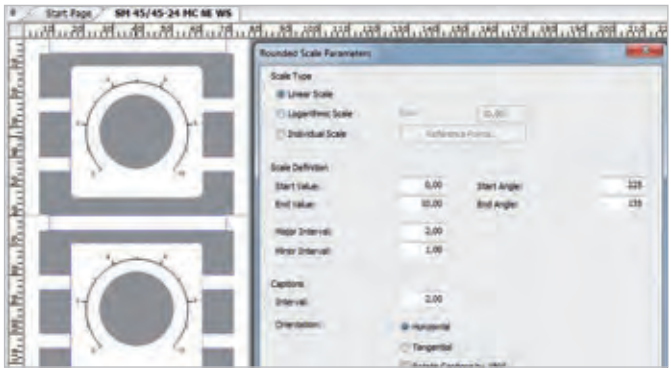

The features under the menu item scale labelling allow you to easily define graphics for round or linear scales.

Key benefits from the drawing functions and scale labels

- Schematic: processing all classification data according to individual parameters
- Functional: create templates for a variety of label formats
- Practical: standard commands for the alignment of individual drawing elements or groupings

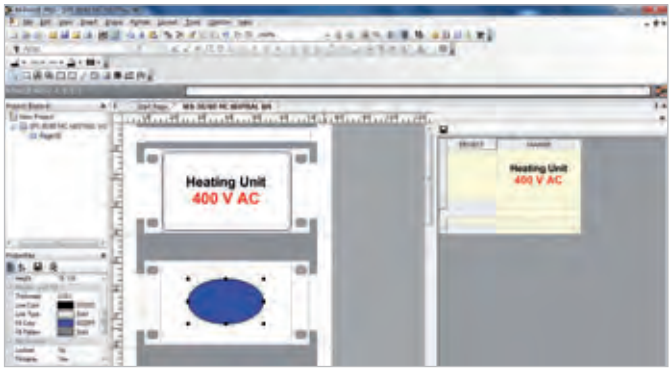

You can use the drawing objects to produce perfect frames or visualise plate holes and cut-outs (e.g. for cable ties) for the various plate forms.

The alignment function makes arranging drawing elements and text fields over the whole area or in pre-defined grids simple. Grouping fields rounds off the user convenience.

Efficient and comprehensive use of design data

M-Print® PRO eCAD, the add-on for electrical engineering software

Rising cost pressures in the industry are bringing about demand for the constant optimisation and standardisation of design work, and the same applies for the creation and use of data, macros, templates and scripts. The aim here is to ensure that all design data is documented in full and made available for use in future projects, which is a requirement that applies in relation to Industry 4.0.

The new M-Print® PRO eCAD checks the integrity of the data during export from the electrical engineerig software, informing the user in the case of missing information. All Weidmüller product data contains the associated accessory information, which ensures the correct allocation of the appropriate markers. This helps with project documentation, e.g. when creating parts lists.

The new interface software supports the call for the systematic exploitation of existing data, thereby saving time and money involved in subsequent work. Having complete and comprehensive product data makes project planning easier and helps minimise sources of error, while increasing quality and efficiency.

The transfer of existing CAE data reduces the associated workload and prevents transfer errors. The use of labelling schemes, templates and import scripts allows for a variety of different export options.

Key benefits

- Flexible export options
  The systematic use of existing data combined with flexible software functions allows for application-specific data transfer and the standardisation and optimisation of internal processes. When used together with Weidmüller printers and markers, this creates “systemised marking”.

- High levels of data security
  The Weidmüller product data for the individual components already contains information on the corresponding accessories, which helps prevent errors caused by incorrect product combinations.

- Plausibility testing
  The new M-Print® PRO eCAD checks the planned components to verify that the assigned markers are complete.

- Application-specific data transfer
  Thanks to the flexible labelling schemes and import scripts, it is possible to generate any labelling text imaginable. Data for identification plates can also be exported and printed, for example.

- Increased efficiency thanks to standardisation
  The standardised project planning and the exchange of data using macros and templates help to increase planning quality and efficiency.

M-Print® PRO Label Designer

Print and **ordering software** for markers and labels
M-Print® PRO is a professional software tool for printing and ordering Weidmüller markers and labels under Windows®. This software helps you to optimise your processes for marking electrical equipment. You can design, print and order your marking materials effortlessly, professionally and quickly: texts, frames, lines, graphics, barcodes, serial numbers and photos.

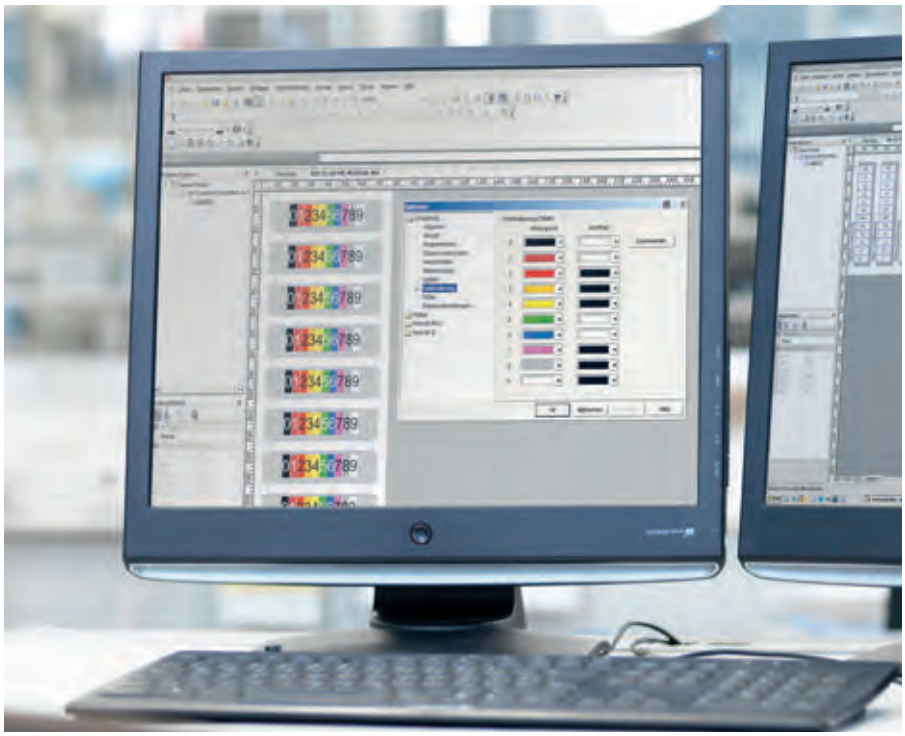

Technical data

Here is an overview of the main functions
Integrated product catalogue for all labels and markers, including images and links to the relevant web pages
Custom formatting of individual text characters (RTF)
Perform copy-and-paste functions with texts and their formats
Supports UNICODE for foreign-language texts, such as Russian, Chinese, Polish, etc.
Enter data on labels or worksheet
Creation of scales; numeric and alphanumeric counts and sequences
Extensive range of image formats (*.bmp, *.wmf, *.png, *.ico, *.jpeg, *.tif, *.gif)
Image library including all the important symbols used in electrical engineering
Permanent print preview: see what the printout will look like even at the design phase, WYSIWYG editing
Output devices supported: Weidmüller marking systems as well as standard printers with Windows® drivers
Imports data from CAE systems
Import wizard for a number of file formats (*.txt, *.csv, *.xml, etc.) for creating your own import scripts
Multi-level structuring of markers and labels
Interface to Weidmüller configurator
Operating systems supported
This product works with with Windows Vista, Windows 7, Windows 8, Windows 8.1 and Windows 10
System requirements
Hard disk memory required: 250 MB (plus disk space for your own files and graphics)
Super VGA monitor with a resolution of at least 768 and 256 colours or more
For installation: USB medium, DVD-ROM or network connection, Internet access if updates are to be called up automatically
Keyboard and mouse (or compatible input devices) for data capture
Internet browser (to download any new product data from the Weidmüller website and to call up details from the product catalogue)
Interface to the printer system (USB, LAN, ...)

Ordering data

M-Print® PRO

Type		Order No.
M-Print® PRO		1905490000
M-Print® PRO Online	www.weidmueller.com/MPP-Online	

Terminal markers

Terminal markers	Introduction	C.2
	Selection table – terminal markers	C.5
	DEK card – Dekafix standard printing	C.10
	DEK MultiCard – markers for terminals and connectors	C.12
	WS MultiCard – markers for the universal range for Klippon® Connect	C.20
	PM MultiCard – markers for compact plug-in connectors	C.34
	ZS MultiCard – markers for Z series modular terminals	C.36
	MF MultiCard – markers for use with other makes of terminals	C.40
	Cross-reference table	C.66
	WAD MultiCard – connector markers for terminal and endbrackets	C.80
	Tag carriers	C.84
	ELS MultiCard – inlay tags	C.90
	Dekafix and WS – MultiMark terminal markers	C.94

Terminal markers

Our range of terminal markers enables you to accomplish virtually any labelling task, on any conductor connector. Whether this involves multi-digit labelling, ready-to-use markers with standard print or customised labelling, white or colour markers or group designations at the clamping points – our comprehensive product portfolio is the easy, quick and clear answer to every marking task.

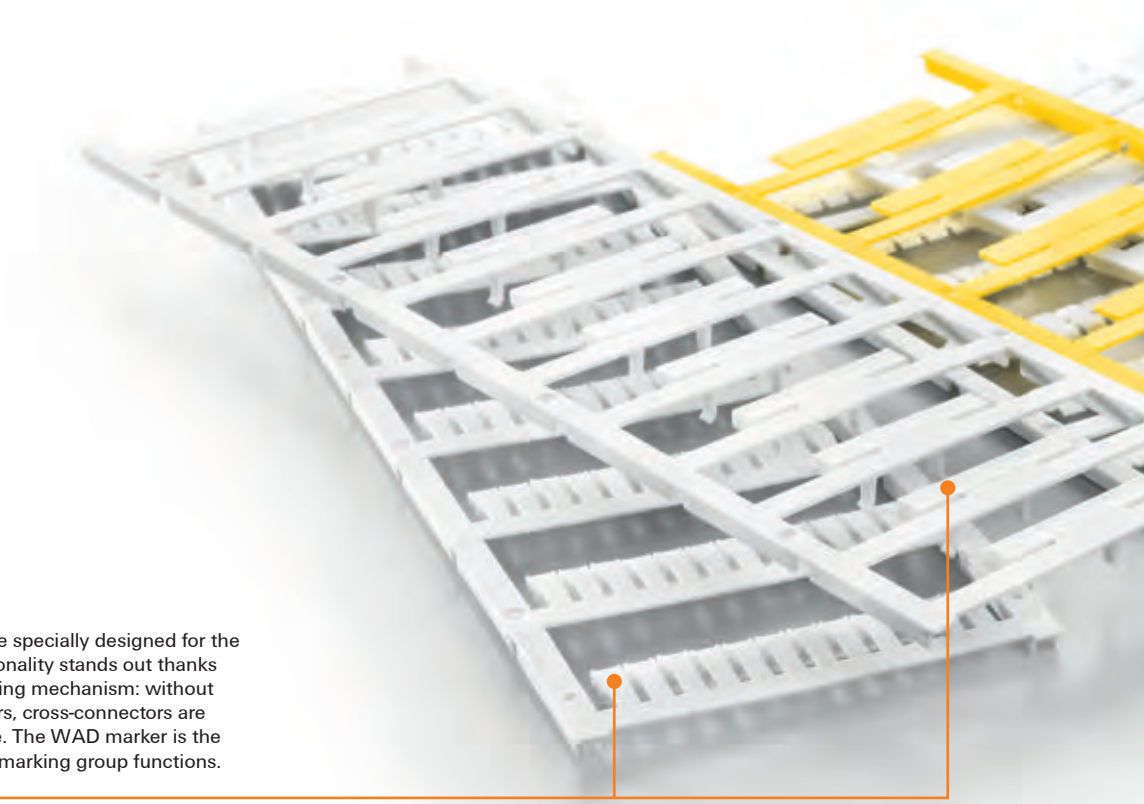

ZS + WAD
The ZS markers were specially designed for the Z-series, their functionality stands out thanks to a time-saving folding mechanism: without removing the markers, cross-connectors are still easily accessible. The WAD marker is the preferred choice for marking group functions.

Tag carrier
Available to you for every solution, is a suitable tag carrier that is tailored according to your needs and matched to the MultiCard product line.

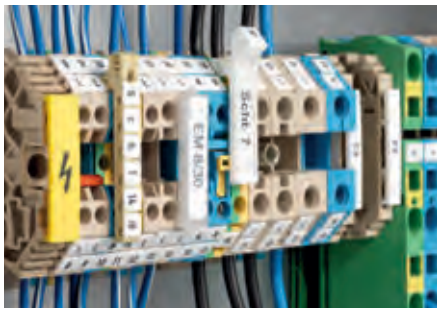

ELS
Optimally designed for use in WKM cable markers or SchT 5-type tag carriers, the ELS tags meet the highest requirements where prominent identification of cables and terminal strips is needed.

Dekafix + WS
Conductor and plug-in connectors, as well as electronic assemblies, can be identified quickly and easily with the Dekafix and WS markers.

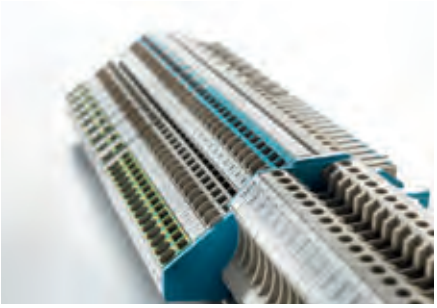

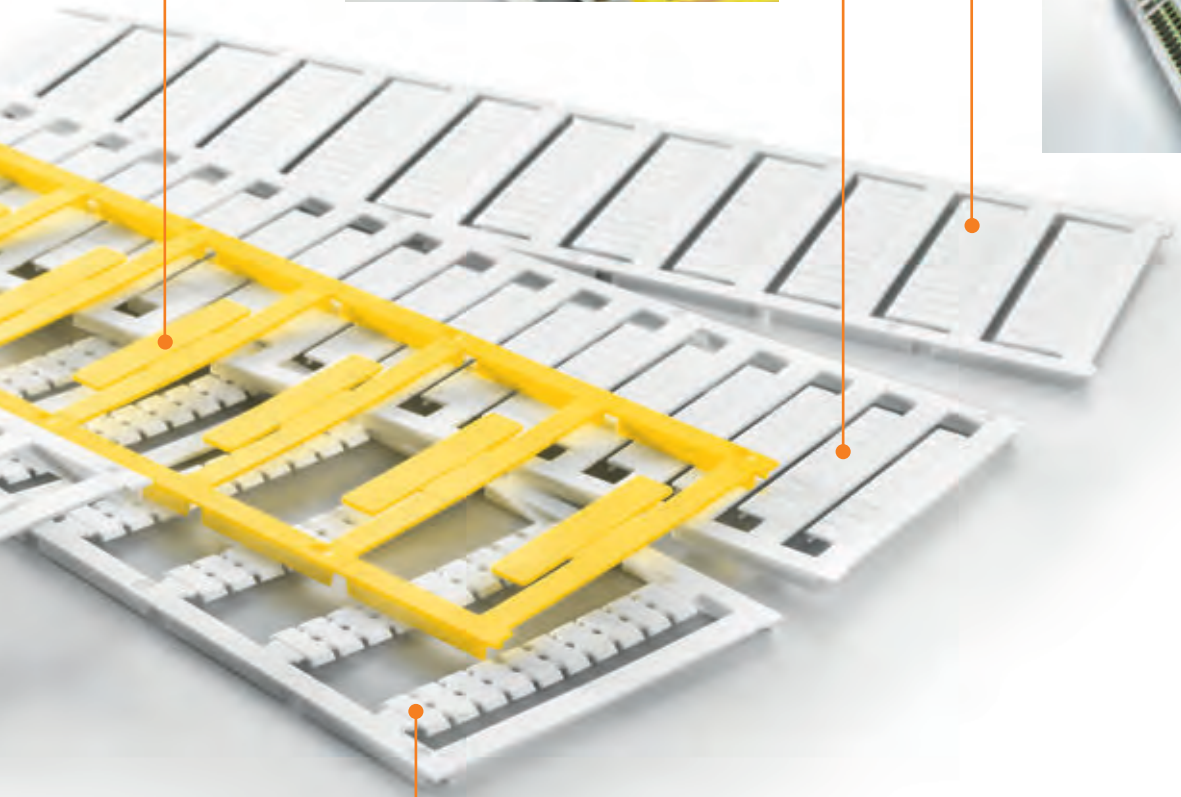

MultiFit
For manufacturer-independent marking of components, we have developed the adaptable MultiFit marker range. The MF 5/12 MC connector marker, for example, is suitable for identifying the flat channel of the 12 mm wide modular terminals from Phoenix Contact.

PrintJet ADVANCED
In combination with the M-Print® PRO software, or as a standalone solution, the PrintJet ADVANCED inkjet printer is the optimum addition to the MultiCard range for high-quality, resistant colour printing, on site.

www.PrintJetADVANCED.com

Terminal markers for the universal range for Klippon® Connect

The tables on the following pages show which markers fit the various terminal series. The terminal pitch governs the selection of a marker. For example, a WDU 2.5 terminal has a pitch of 5 mm, the WS 12/5 marker is 12 mm long and suitable for a 5 mm pitch.

Whole blocks of terminals can be marked as a strip. When a terminal with a larger pitch has to be marked (e.g. WDU 16), a smaller marker (e.g. WS 12/5) can be clipped onto it. Most of the markers are compatible with each other.

The two traditional marker series, DEK and WS, are available as ready-to-use markers. Users can print these for themselves using our Multicards.

MultiCards can be printed on, using the innovative PrintJet ADVANCED, MCP Plus 2 or MCP Basic 2 printing systems in conjunction with our M-Print® PRO software.

To see a small selection of our markers, order a bag of samples, order No. **1646670000**.

A series

W series

Z series

P series

Owing to the sheer number of possible applications and environmental influences such as moisture, radiation, gases or heat/cold to which the products can be exposed, Weidmüller accepts no liability for the suitability of products in all customer applications. Suitability tests for specific applications must therefore be carried out by the customer. However, Weidmüller will be happy to provide help and advice upon request.
Due to the different identification system available on the market, we wish to point out that Weidmüller does not guarantee industrial identification products if the Weidmüller components (markers – transparent sleeves – ink/toner/colour ink ribbons – printing systems) are combined with third-party products, unless Weidmüller has explicitly agreed for the purpose of an individual application.

Designation	Terminal width	DEK	WS	ZS	DEK MM	WS MM	SchT 7	WAD 5	WAD 8	WAD 12	WAD 27	ZGB 15 / ZGB 30	BZT 1	BZT 2	EM 8/30	Other
A2C 1.5...(PE)	**3,5**	5/3.5	10/3.5		5/3.5	8/3.5	-	-	-	-	-	-	-	-	-	-
A3C 1.5...(PE)	**3,5**	5/3.5	10/3.5		5/3.5	8/3.5	-	-	-	-	-	-	-	-	-	-
A4C 1.5...(PE)	**3,5**	5/3.5	10/3.5		5/3.5	8/3.5	-	-	-	-	-	-	-	-	-	-
A2C 2.5...(PE)	**5,1**	5/5	10/5		5/5	8/5	-	-	-	-	-	-	-	-	-	-
A3C 2.5...(PE)	**5,1**	5/5	10/5		5/5	8/5	-	-	-	-	-	-	-	-	-	-
A4C 2.5...(PE)	**5,1**	5/5	10/5		5/5	8/5	-	-	-	-	-	-	-	-	-	-
A2C 4...(PE)	**6,1**	5/6	10/6		5/6	8/6	-	-	-	-	-	-	-	-	-	-
A3C 4...(PE)	**6,1**	5/6	10/6		5/6	8/6	-	-	-	-	-	-	-	-	-	-
A4C 4...(PE)	**6,1**	5/6	10/6		5/6	8/6	-	-	-	-	-	-	-	-	-	-
A2C 6...(PE)	**8,1**	5/8	10/8		-A 5/8	-A8/8	-	-	-	-	-	-	-	-	-	-
A3C 6...(PE)	**8,1**	5/8	10/8		-A 5/8	-A8/8	-	-	-	-	-	-	-	-	-	-
ALO 6	**9**	5/5	10/5		5/5	8/5	-	-	-	-	-	-	-	-	-	-
A2T 2.5...(PE)	**5,1**	5/5	10/5		5/5	8/5	-	-	-	-	-	-	-	-	-	-
A3T 2.5...(PE)	**5,1**	5/5	10/5		5/5	8/5	-	-	-	-	-	-	-	-	-	-
ADT 2.5 2C...(PE)	**5,1**	5/5	10/5		5/5	8/5	-	-	-	-	-	-	-	-	-	-
ADT 2.5 3C...	**5,1**	5/5	10/5		5/5	8/5	-	-	-	-	-	-	-	-	-	-
ADT 2.5 4C...	**5,1**	5/5	10/5		5/5	8/5	-	-	-	-	-	-	-	-	-	-
AAP11 6...	**8,1**	5/8	-		-A 5/8	-A8/8	-	-	-	-	-	-	-	-	-	-
AAP11 1.5...	**3,5**	5/3.5	10/3.5		5/3.5	8/3.5	-	-	-	-	-	-	-	-	-	-
AAP12 10...	**10**		7.8/9.2		-	-	-	-	-	-	-	-	-	-	-	-
AAP12 2.5...	**5,1**	5/5	-		5/5	8/5	-	-	-	-	-	-	-	-	-	-
AAP13 6...	**8,1**	5/8	-		-A 5/8	-A8/8	-	-	-	-	-	-	-	-	-	-
AAP13 1.5...	**3,5**	5/3.5	10/3.5		5/3.5	8/3.5	-	-	-	-	-	-	-	-	-	-
AAP14 10...	**10**		7.8/9.2		-	-	-	-	-	-	-	-	-	-	-	-
AAP14 2.5...	**5,1**	5/5	-		5/5	8/5	-	-	-	-	-	-	-	-	-	-
AIO21 1.5 SI...(PE)	**3,5**	5/3.5	10/3.5		5/3.5	8/3.5	-	-	-	-	-	-	-	-	-	-
AIO22 1.5 SI-PE	**3,5**	5/3.5	10/3.5		5/3.5	8/3.5	-	-	-	-	-	-	-	-	-	-
AIO23 1.5 2SI	**3,5**	5/3.5	10/3.5		5/3.5	8/3.5	-	-	-	-	-	-	-	-	-	-
APGTB 2.5 FT 2C/1	**5,1**	5/5	10/5		5/5	8/5	-	-	-	-	-	-	-	-	-	-
APGTB 2.5 PE 2C/1	**5,1**	5/5	10/5		5/5	8/5	-	-	-	-	-	-	-	-	-	-
APGTB 2.5 2T 4C/2	**5,1**	5/5	10/5		5/5	8/5	-	-	-	-	-	-	-	-	-	-
APGTB 2.5 2T FT-PE 4C/2	**5,1**	5/5	10/5		5/5	8/5	-	-	-	-	-	-	-	-	-	-
APGTB 2.5 2T PE 4C/2	**5,1**	5/5	10/5		5/5	8/5	-	-	-	-	-	-	-	-	-	-
APGTB 2.5 2T VL 4C/2	**5,1**	5/5	10/5		5/5	8/5	-	-	-	-	-	-	-	-	-	-
ADK 1	**6**	6	-	-			-	-	-	-	-	-	-	-	-	-
AKE 2,5/AKZ 2,5...	**5**	5/5	-	-	5/5	-	-	-	-	-	-	-	-	-	-	-
AKE 2.5	**5,1**	5/5	-	-	5/5	-	-	-	-	-	-	-	-	-	-	-
AKE 4	**7**	5/6.5	-	-	5/6.5	-	-	-	-	-	-	-	-	-	-	-
AKZ 1,5...	**5**	5/5	-	-	5/5	-	-	-	-	-	-	-	-	-	-	-
AKZ 1.5-2.5	**5,1**	5/5	-	-	5/5	-	-	-	-	-	-	-	-	-	-	-
AKZ 4	**6,1**	5/6	-	-	5/6	-	-	-	-	-	-	-	-	-	-	-
AKZ 4.../AKB 4...	**6**	5/6	8/5	-	5/6	8/5	-	-	-	-	-	-	-	-	-	-
AL 1	**6,5**	6,5	-	-			-	-	-	-	-	-	-	-	-	-
ASK 1	**8**	5/8	-	-	5/8	-	x	-	-	-	-	-	-	-	-	-
AST 1-4/35	**6,2**	5/6	-	-	5/6	-	-	-	-	-	-	-	-	-	-	-
AST 5/35	**6,5**	5/6	-	-	5/6	-	-	-	-	-	-	-	-	-	-	-
BZT ZVL 1,5	**5,08**	5/5	12/5	-	5/5	12/5	-	-	-	-	-	-	-	-	-	-
DK 4...	**6**	5/6	-	-	5/6	-	-	-	-	-	-	-	-	-	-	-
DKT 4...	**6**	5/6	-	-	5/6	-	-	-	-	-	-	-	-	-	-	-
DLA 2,5...	**6**	5/6	8/5	-	5/6	8/5	x	-	-	-	-	-	-	-	-	-
DLD 2,5...	**6**	5/6	8/6	-	5/6	8/6	x	-	-	-	-	-	-	-	-	-
DLI 2,5	**6**	5/6	8/5	-	5/6	8/5	x	-	-	-	-	-	-	-	-	-
EK 10	**10**	5/5	-	-	5/5	-	-	-	-	-	-	-	-	-	-	-
EK 16	**12**	5/5	-	-	5/5	-	-	-	-	-	-	-	-	-	-	-
EK 2.5...	**6**	5/6	-	-	5/6	-	-	-	-	-	-	-	-	-	-	-
EK 35...	**16**	5/5	-	-	5/5	-	-	-	-	-	-	-	-	-	-	-
EK 4...	**6,5**	5/6.5	-	-	5/6.5	-	-	-	-	-	-	-	-	-	-	-
EK 6/35	**8**	5/8	-	-	5/8	-	-	-	-	-	-	-	-	-	-	-
EW 15	**9,5**	5/5	12/5	-	5/5	12/5	x	-	-	-	-	-	-	-	-	-
EW 15/2	**8**	5/5	-	-	5/5	-	-	-	-	-	-	-	-	-	-	-
EW 35	**8,5**	5/5	8/5	-	5/5	8/5	-	-	-	-	-	-	-	-	-	-
EWK	**8,5**	5/5	8/5	-	5/5	8/5	-	-	-	-	-	-	-	-	-	-
EWK 1	**8,5**	5/5	8/5	-	5/5	8/5	-	-	-	-	-	-	-	-	-	-
EWK 2	**8,5**	5/5	8/5	-	5/5	8/5	-	-	-	-	-	-	-	-	-	-
KDKS 1...	**8**	5/8	-	-	5/8	-	-	-	-	-	-	-	-	-	-	-
KMVF...	**6**	5/5	-	-	5/5	-	-	-	-	-	-	-	-	-	-	-
KSKM...	**13**	5/5	-	-	5/5	-	-	-	-	-	-	-	-	-	-	-
KST...	**24-34**	5	-	-			-	-	-	-	-	-	-	-	-	-
MAK 2,5/VLI 1,5...	**6**	5/6	8/5	-	5/6	8/5	x	-	-	-	-	x	-	-	-	-
NT...	**12**	5/6	-	-	5/6	-	-	-	-	-	-	-	-	-	-	-

1) = WS 10/6 Middle; 2) = WS 10/5 Middle; 3) = SnapMark

Selection table – terminal markers

Designation	Terminal width	DEK	WS	ZS	DEK MM	WS MM	SchT 7	WAD 5	WAD 8	WAD 12	WAD 27	ZGB 15 / ZGB 30	BZT 1	BZT 2	EM 8/30	Other
PDK 2.5/4	**5**	5/5	12/5	-	5/5	12/5	-	-	-	-	-	-	-	-	-	-
PDL 4...	**5**	5/5	12/5	-	5/5	12/5	-	-	-	-	-	-	-	-	-	-
PDL 6...	**8,1**	5/8	10/8		5/8	8/8	-	-	-	-	-	-	-	-	-	-
PDU 16	**12**	-	10/12	-	-	-	-	-	-	-	-	-	-	-	-	-
PDU 2.5/4...	**5**	5/5	12/5	-	5/5	12/5	-	-	-	-	-	-	-	-	-	-
PDU 6/10...	**8**	5/8	10/8	-	5/8	8/8	-	-	-	-	-	-	-	-	-	-
PEI 16	**12**	-	10/12	-	-	-	-	-	-	-	-	-	-	-	-	-
PMAK 4...	**5,1**	5/5	-	-	5/5	8/5	-	-	-	-	-	-	-	-	-	-
PNT 16	**12**	-	10/12	-	-	-	-	-	-	-	-	-	-	-	-	-
PNT 2.5/4	**5**	5/5	12/5	-	5/5	12/5	-	-	-	-	-	-	-	-	-	-
PNT 6/10	**8**	5/8	10/8	-	5/8	8/8	-	-	-	-	-	-	-	-	-	-
PPE 16	**12**	-	10/12	-	-		-	-	-	-	-	-	-	-	-	-
PPE 2.5/4	**5**	5/5	12/5	-	5/5	12/5	-	-	-	-	-	-	-	-	-	-
PPE 6/10	**8**	5/8	10/8	-	5/8	8/8	-	-	-	-	-	-	-	-	-	-
PSI 6/10	**12,2**		10/8		-	-										
PTR 2.5/4...	**5,1**	5/5	10/5	-	5/5	8/8	-	-	-	-	-	-	-	-	-	-
PPV 4...	**9,2**		7.8/9.2	-	-	-	-	-	-	-	-	-	-	-	-	-
PPV 8...	**9,2**		7.8/9.2	-	-	-	-	-	-	-	-	-	-	-	-	-
PRV 4...	**9,2**		7.8/9.2	-	-	-	-	-	-	-	-	-	-	-	-	-
PRV 8...	**9,2**		7.8/9.2	-	-	-	-	-	-	-	-	-	-	-	-	-
PRV 16...	**9,2**		7.8/9.2	-	-	-	-	-	-	-	-	-	-	-	-	-
RSF 1-3...	**8**	5/5	-	-	5/5	-	-	-	-	-	-	-	-	-	-	-
SAK 10...	**10**	5/5	-	-	5/5	-	-	-	-	-	-	-	-	-	-	-
SAK 16...	**12**	5/5	-	-	5/5	-	-	-	-	-	-	-	-	-	-	-
SAK 2.5	**6,1**	5/6	-	-	5/6	-	x	-	-	-	-	-	-	-	-	-
SAK 2.5/35	**5**	5/5	-	-	5/5	-	x	-	-	-	-	-	-	-	-	-
SAK 35...	**18**	5/5	-	-	5/5	-	x	-	-	-	-	-	-	-	-	-
SAK 4...	**6,5**	5/6.5	-	-	5/6.5	-	x	-	-	-	-	-	-	-	-	-
SAK 6...	**8**	5/8	-	-	5/8	-	x	-	-	-	-	-	-	-	-	-
SAK 95/35	**28**	5/5	-	-	5/5	-	x	-	-	-	-	-	-	-	-	-
SAKA 10	**12**	5/5	-	-	5/5	-	x	-	-	-	-	-	-	-	-	-
SAKB 10	**10**	5/5	-	-	5/5	-	x	-	-	-	-	-	-	-	-	-
SAKC 10/35	**12**	5/6.5	-	-	5/6.5	-	x	-	-	-	-	-	-	-	-	-
SAKC 4/35	**6,5**	5/6.5	-	-	5/6.5	-	x	-	-	-	-	-	-	-	-	-
SAKD 2,5N	**5**	5/5	-	-	5/5	-	x	-	-	-	-	-	-	-	-	-
SAKG...	**32-54**	5/5	-	-	5/5	-	x	-	-	-	-	-	-	-	-	-
SAKH 35	**18**	5/6.5	-	-	5/6.5	-	-	-	-	-	-	-	-	-	-	-
SAKH 4-10	**6,5-14**	5/5	-	-	5/5	-	x	-	-	-	-	-	-	-	-	-
SAKK 10..	**11,5**	5/5	-	-	5/5	-	x	-	-	-	-	-	-	-	-	-
SAKK 4..	**8**	5/6.5	-	-	5/6.5	-	x	-	-	-	-	-	-	-	-	-
SAKR...	**6,5**	5/6.5	-	-	5/6.5	-	x	-	-	-	-	-	-	-	-	-
SAKS....	**13-28**	5/5	-	-	5/5	-	x	-	-	-	-	-	-	-	-	-
SAKT...	**8**	5/6.5	-	-	5/6.5	-	x	-	-	-	-	-	-	-	-	-
VWGK 4...	**10**	5/5	12/6.5	-	5/5	-	-	-	-	-	-	-	-	-	-	-
VWGK 6...	**10**	5/5	12/6.5	-	5/5	-	-	-	-	-	-	-	-	-	-	-
WDK 1,5/R 3,5...	**3,5**	5/3.5	-	-	5/3.5	-	-	-	-	-	-	-	-	-	-	-
WDK 2,5 ...	**5**	5/5	8/5	-	5/5	8/5	-	-	-	-	-	x	-	-	-	-
WDK 2,5 800V	**6**	5/6	8/5	-	5/6	8/5	-	-	-	-	-	x	-	-	-	-
WDK 2,5/BLA R5.08	**5,08**	5/5	8/5	-	5/5	8/5	-	-	-	-	-	-	-	-	-	-
WDK 2,5/BLZ R5.08	**5,08**	5/5	8/5	-	5/5	8/5	-	-	-	-	-	-	-	-	-	-
WDK 2.5N...	**5**	5/5	8/5	-	5/5	8/5	-	-	-	-	-	-	-	-	-	-
WDK 4N...	**5**	5/5	8/5	-	5/5	8/5	-	-	-	-	-	-	-	-	-	-
WDL 2,5/...	**6**	5/6	8/5	-	5/6	8/5	-	-	-	-	-	x	-	-	-	-
WDT 1,5	**6,5**	5/6.5	8/5	-	5/6.5	8/5	-	-	-	-	-	-	-	-	-	-
WDTR 2,5...	**6,2**	5/6	8/5	-	5/6	8/5	-	-	-	-	-	-	-	-	-	-
WDU (WPE) 120/150	**32**	5/5	10/5	-	5/5	8/5	-	-	-	-	x	-	-	-	-	-
WDU (WPE) 35 N	**16**	5/5	12/5	-	5/5	12/5	x	-	-	-	-	x	-	-	-	-
WDU (WPE) 70/95	**27**	5/5	12/5	-	5/5	12/5	-	-	-	-	x	-	-	-	-	-
WDU (WPE) 70N	**20,5**	5/5	12/5	-	5/5	12/5	x	-	-	-	-	x	-	-	-	-
WDU 1,5 LD/BLA	**5,08**	5/5	12/5	-	5/5	12/5	x	-	-	-	-	x	-	-	-	-
WDU 1,5/BLA	**5,08**	5/5	12/5	-	5/5	12/5	x	-	-	-	-	x	-	-	-	-
WDU 1,5/BLZ R7,62	**7,62**	5/5	-	-	5/5	-	-	-	-	-	-	x	-	-	-	-
WDU 1,5/BLZ/5,08	**5,08**	5/5	12/5	-	5/5	12/5	x	-	-	-	-	x	-	-	-	-
WDU 1,5/BLZ/LD/5,08	**5,08**	5/5	12/5	-	5/5	12/5	x	-	-	-	-	x	-	-	-	-
WDU 1,5/R 3,5...	**3,5**	5/3.5	-	-	5/3.5	-	-	-	-	-	-	-	-	-	-	-
WDU 1,5/R/BLA	**5,08**	5/5	12/5	-	5/5	12/5	x	-	-	-	-	x	-	-	-	-
WDU 1,5/ZZ	**5**	5/5	12/5	-	5/5	12/5	x	-	-	-	-	x	-	-	-	-
WDU 10 SL	**10**	5/5	12/5	-	5/5	12/5	x	x	x	-	-	x	-	-	-	-
WDU 10...	**10**	5/5	12/5	-	5/5	12/5	x	x	x	-	-	x	-	-	-	-
WDU 16 (/ZA)	**12**	5/5	12/5	-	5/5	12/5	x	-	-	x	-	x	-	-	-	-

Designation	Terminal width	DEK	WS	ZS	DEK MM	WS MM	SchT 7	WAD 5	WAD 8	WAD 12	WAD 27	ZGB 15 / ZGB 30	BZT 1	BZT 2	EM 8/30	Other
WDU 16 N	**12**	5/5	12/5	-	5/5	12/5	x	-	-	-	-	x	-	-	-	-
WDU 2,5 F	**5**	5/5	12/5	-	5/5	12/5	-	-	-	-	-	-	-	-	-	-
WDU 2,5 FF	**5**	5/5	12/5	-	5/5	12/5	x	-	-	-	-	-	-	-	-	-
WDU 2,5 N (WDU 1,5)	**5**	5/5	12/5	-	5/5	12/5	x	-	-	-	-	x	-	-	-	-
WDU 2,5 TC...	**5**	5/5	12/5	-	5/5	12/5	x	-	-	-	-	x	-	-	-	-
WDU 2,5...	**5**	5/5	12/5	-	5/5	12/5	x	x	-	-	-	x	-	-	-	-
WDU 2,5/1,5/ZZ	**5**	5/5	12/5	-	5/5	12/5	x	-	-	-	-	x	-	-	-	-
WDU 2,5/BLZ R7,62	**7,62**	5/5	-	-	5/5	-	-	-	-	-	-	x	-	-	-	-
WDU 240...	**36**	5/5	12/5	-	5/5	12/5	-	-	-	-	-	-	-	-	-	-
WDU 35	**16**	5/5	12/5	-	5/5	12/5	x	-	-	x	-	x	-	-	-	-
WDU 4 ...	**6**	5/6	12/6	-	5/6	12/6	x	x	-	-	-	x	-	-	-	-
WDU 4N ...	**6**	5/6	12/6	-	5/6	12/6	x	-	-	-	-	x	-	-	-	-
WDU 50N	**18,5**	5/5	12/5	-	5/5	12/5	-	-	-	-	-	-	-	-	-	-
WDU 6 ...	**8**	5/8	12/8	-	5/8	12/8	x	x	x	-	-	x	-	-	-	-
WDU 95N	**27**	5/8	15/5	-	5/8	12/5	-	-	-	-	-	-	-	-	-	-
WDUL 4	**6**	5/6	12/6	-	5/6	12/6	x	x	-	-	-	x	-	-	-	-
WEW 32/1	**12,2**	5/5	12/5	-	5/5	12/5	x	-	-	-	x	x	-	-	-	-
WEW 35/1	**12,2**	5/5	12/5	-	5/5	12/5	x	-	-	-	-	-	-	-	-	-
WEW 35/2	**8**	5/8	12/5	-	5/8	12/5	x	x	x	-	-	-	-	-	x	-
WF 10...	**35,6**	5/6	15/5	-	5/6	12/5	-	-	-	-	-	-	-	-	-	-
WF 12...	**35,6**	5/6	15/5	-	5/6	12/5	-	-	-	-	-	-	-	-	-	-
WF 5...	**13**	5/6	15/5	-	5/6	12/5	-	-	-	-	-	-	-	-	-	-
WF 6...	**19,6**	5/6	15/5	-	5/6	12/5	-	-	-	-	-	-	-	-	-	-
WF 8...	**24,6**	5/6	15/5	-	5/6	12/5	-	-	-	-	-	-	-	-	-	-
WFF 120...	**42**	5/5	12/6.5	-	5/5	-	-	-	-	-	-	-	-	-	-	-
WFF 185...	**55**	5/5	12/6.5	-	5/5	-	-	-	-	-	-	-	-	-	-	-
WFF 300...	**55**	5/5	12/6.5	-	5/5	-	-	-	-	-	-	-	-	-	-	-
WFF 35...	**27**	5/5	12/5	-	5/5	12/5	-	-	-	-	-	-	-	-	-	-
WFF 70...	**32**	5/5	12/6.5	-	5/5	-	-	-	-	-	-	-	-	-	-	-
WGK 10.../WGKV 10..	**10,1**	5/5	12/6.5	-	5/5	-	-	-	-	-	-	-	-	-	-	-
WGK 16...	**12,1**	5/5	12/6.5	-	5/5	-	-	-	-	-	-	-	-	-	-	-
WGK 25.../WGKV 25...	**15,1**	5/5	10/15	-	5/5	-	-	-	-	-	-	-	-	-	-	-
WGK 4.../WGKV 4...	**8,1**	5/8	10/8	-	5/8	8/8	-	-	-	-	-	-	-	-	-	-
WGK 50...	**18,8**	5/5	-	-	5/5	-	-	-	-	-	-	-	-	-	-	-
WGK 95...	**25**	5/8	-	-	5/8	-	-	-	-	-	-	-	-	-	-	-
WMA 4...	**6**	5/6	12/6	-	5/6	12/6	x	x	-	-	-	x	-	-	-	-
WMF 2.5...(BLZ)	**5,08**	5/5	10/5		5/5	8/5	-	-	-	-	-	-	-	-	-	-
WMF 2.5 DI...(PE)/(BLZ)	**5,08**	5/5	10/5		5/5	8/5	-	-	-	-	-	-	-	-	-	-
WMF 2.5 PE...	**5,08**	5/5	10/5		5/5	8/5	-	-	-	-	-	-	-	-	-	-
WMF 2.5 FU...(PE)/(BLZ)	**5,08**	5/5	10/5		5/5	8/5	-	-	-	-	-	-	-	-	-	-
WNT 10	**10**	5/5	12/5	-	5/5	12/5	x	-	-	-	-	x	-	-	-	-
WNT 16 N	**12**	5/5	12/5	-	5/5	12/5	x	-	-	-	-	x	-	-	-	-
WNT 2,5	**5**	5/5	12/5	-	5/5	12/5	x	-	-	-	-	x	-	-	-	-
WNT 35 N	**16**	5/5	12/5	-	5/5	12/5	x	-	-	-	-	x	-	-	-	-
WNT 4	**6**	5/6	12/6	-	5/6	12/6	x	-	-	-	-	x	-	-	-	-
WNT 6	**8**	5/8	12/5	-	5/8	12/5	x	-	-	-	-	x	-	-	-	-
WNT 70 N	**20,5**	5/5	12/5	-	5/5	12/5	x	-	-	-	-	x	-	-	-	-
WPDB...		-	-	-			-	-	-	-	-	-	-	-	-	LM MT3000 15x9 GE
WPD 100...	**30,2**	-	-	-	-	-	-	-	-	-	-	-	-	-	-	ESG 9/17 K MC SDR
WPD 101...	**17,8**	-	-	-	-	-	-	-	-	-	-	-	-	-	-	SFX 10/23 MC NE WS V2
WPD 301...	**53,4**	-	-	-	-	-	-	-	-	-	-	-	-	-	-	SFX 10/23 MC NE WS V2
WPD 401...	**81,5**	-	-	-	-	-	-	-	-	-	-	-	-	-	-	SFX 10/23 MC NE WS V2
WPD 501...	**88,8**	-	-	-	-	-	-	-	-	-	-	-	-	-	-	SFX 10/23 MC NE WS V2
WPD 102...	**22,2**	-	-	-	-	-	-	-	-	-	-	-	-	-	-	HSS 1/2 4.8-11.4/50Y
WPD 202...	**44,4**	-	-	-	-	-	-	-	-	-	-	-	-	-	-	HSS 1/2 4.8-11.4/50Y
WPD 302...	**66,6**	-	-	-	-	-	-	-	-	-	-	-	-	-	-	HSS 1/2 4.8-11.4/50Y
WPD 103...	**32,9**	-	-	-	-	-	-	-	-	-	-	-	-	-	-	SFX 30/60 MC NE WS
WPD 104...	**33,3**	-	-	-	-	-	-	-	-	-	-	-	-	-	-	ESG 9/17 K MC SDR
WPD 204...	**64,5**	-	-	-	-	-	-	-	-	-	-	-	-	-	-	ESG 9/17 K MC SDR
WPD 304...	**96**	-	-	-	-	-	-	-	-	-	-	-	-	-	-	ESG 9/17 K MC SDR
WPD 105...	**37,1**	-	-	-	-	-	-	-	-	-	-	-	-	-	-	ESG 9/17 K MC SDR
WPD 205...	**72,7**	-	-	-	-	-	-	-	-	-	-	-	-	-	-	ESG 9/17 K MC SDR
WPD 305...	**108,3**	-	-	-	-	-	-	-	-	-	-	-	-	-	-	ESG 9/17 K MC SDR
WPD 106...	**41**	-	-	-	-	-	-	-	-	-	-	-	-	-	-	ESG 9/17 K MC SDR
WPD 107...	**52,2**	-	-	-	-	-	-	-	-	-	-	-	-	-	-	ESG 9/17 K MC SDR
WPD 108...	**52,2**	-	-	-	-	-	-	-	-	-	-	-	-	-	-	ESG 9/17 K MC SDR
WPD 109...	**52,6**	-	-	-	-	-	-	-	-	-	-	-	-	-	-	ESG 9/17 K MC SDR
WPE 1,5/R3,5	**3,5**	5/3.5	12/3.5	-	5/3.5	12/3.5	-	-	-	-	-	-	-	-	-	-
WPE 1,5/ZZ	**5**	5/5	12/5	-	5/5	12/5	x	-	-	-	-	x	-	-	-	-
WPE 10...	**10**	5/5	12/5	-	5/5	12/5	x	-	-	-	-	x	-	-	-	-

Selection table – terminal markers

Designation	Terminal width	DEK	WS	ZS	DEK MM	WS MM	SchT 7	WAD 5	WAD 8	WAD 12	WAD 27	ZGB 15 / ZGB 30	BZT 1	BZT 2	EM 8/30	Other
WPE 120	**32**	5/8	12/6.5	-	5/8	-	-	-	-	-	-	-	-	-	-	-
WPE 16	**12**	5/5	12/5	-	5/5	12/5	x	-	-	-	-	x	-	-	-	-
WPE 16 N	**12**	5/5	12/5	-	5/5	12/5	x	-	-	-	-	x	-	-	-	-
WPE 2,5 N (WPE 1,5)	**5**	5/5	12/5	-	5/5	12/5	x	-	-	-	-	x	-	-	-	-
WPE 2,5...	**5**	5/5	12/5	-	5/5	12/5	x	-	-	-	-	x	-	-	-	-
WPE 2,5/1,5/ZR	**5**	5/5	12/5	-	5/5	12/5	-	-	-	-	-	-	-	-	-	-
WPE 35...	**16**	5/5	12/5	-	5/5	12/5	x	-	-	-	-	x	-	-	-	-
WPE 4	**6**	5/6	12/6	-	5/6	12/6	x	-	-	-	-	x	-	-	-	-
WPE 4N	**6**	5/6	12/6	-	5/6	12/6	-	-	-	-	-	-	-	-	-	-
WPE 50N	**18,5**	5/8	12/6.5	-	5/8	-	-	-	-	-	-	-	-	-	-	-
WPE 6	**7,9**	5/6	12/5	-	5/6	12/5	x	-	-	-	-	x	-	-	-	-
WPE 95N/120N	**27**	5/8	15/5	-	5/8	12/5	-	-	-	-	-	-	-	-	-	-
WPO 4	**6**	5/6	10/6	-	5/6	8/6	-	-	-	-	-	x	-	-	-	-
WSI 25...	**18**	-	-	-	-	-	-	-	-	-	-	-	-	-	-	ESG 6/15
WSI 6...	**8**	5/8	12/5	-	5/8	12/5	-	-	-	-	-	x	-	-	-	-
WSI 6/2...	**12**	5/8	12/6.5	-	5/8	-	-	-	-	-	-	-	-	-	-	-
WTD 6/1	**8**	5/8	12/5	-	5/8	12/5	-	-	-	-	-	x	-	-	-	-
WTL 35	**16**	-	12/6		-	12/6										-
WTL 4 ...	**6**	5/6	12/6	-	5/6	12/6	-	-	-	-	-	-	-	-	-	-
WTL 6/1...	**8**	5/8	12/8	-	5/8	12/8	-	-	-	-	-	x	-	-	-	-
WTL 6/2	**8**	5/8	12/8	-	5/8	12/8	-	-	-	-	-	x	-	-	-	-
WTL 6/3...	**8**	5/8	12/8	-	5/8	12/8	-	-	-	-	-	x	-	-	-	-
WTQ 6/1	**8**	5/8	12/8	-	5/8	12/8	-	-	-	-	-	x	-	-	-	-
WTR 2,5 ...	**5**	5/5	12/5	-	5/5	12/5	-	-	-	-	-	x	-	-	-	-
WTR 35 E	**32**	-	12/6	-	-	12/6	-	-	-	-	-	-	-	-	-	-
WTR 4...	**6**	5/6	12/6	-	5/6	12/6	-	-	-	-	-	-	-	-	-	-
ZAP/TW ZIA 1,5/...	**3,8**	5/3.5	-	-	5/3.5	-	-	-	-	-	-	-	-	-	-	-
ZDK 1,5...	**3,5**	5/3.5	12/3.5	-	5/3.5	12/3.5	-	-	-	-	-	-	-	-	-	-
ZDK 2,5...	**5**	5/5	12/5	5/5	5/5	12/5	-	-	-	-	-	x	-	-	-	-
ZDK 2,5-2...	**5**	5/5	10/5	10/5	5/5	8/5	-	-	-	-	-	-	-	-	-	-
ZDK 2.5N...	**5,1**	5/5	10/5	-	5/5	8/5	-	-	-	-	-	-	-	-	-	ZAD 9/4
ZDK 4/S/...	**6**	5/6	-	12/6	5/6	-	-	-	-	-	-	x	-	-	-	-
ZDK 6/S/...	**8**	5/8	-	-	5/8	-	-	-	-	-	-	x	-	-	-	-
ZDKPE 2,5	**5**	5/5	10/5	10/5	5/5	8/5	-	-	-	-	-	-	-	-	-	-
ZDL 2,5/...	**5**	5/5	-	10/5	5/5	-	-	-	-	-	-	x	-	-	-	-
ZDLD 2,5-2...	**5**	5/5	-	10/5	5/5	-	-	-	-	-	-	x	-	-	-	-
ZDT 2.5 ...	**5**	5/5	10/5	10/5	5/5	8/5	-	-	-	-	-	-	-	-	-	-
ZDTPE 2.5...	**5**	5/5	10/5	10/5	5/5	8/5	-	-	-	-	-	-	-	-	-	-
ZDTR 2,5	**5**	5/5	12/5	15/5	5/5	12/5	-	-	-	-	-	x	-	-	-	-
ZDU (ZPE) 10	**10**	5/5	12/5	15/5	5/5	12/5	-	-	-	-	-	x	x	x	-	-
ZDU (ZPE) 10/S...	**10**	5/5	10/5	15/5	5/5	8/5	-	-	-	-	-	x	x	x	-	-
ZDU (ZPE) 16...	**12**	5/5	12/5	15/5	5/5	12/5	-	-	-	-	-	x	x	x	-	-
ZDU (ZPE) 16/S...	**12**	5/5	10/5	15/5	5/5	8/5	-	-	-	-	-	x	x	x	-	-
ZDU (ZPE) 2,5 ...	**5**	5/5	12/5	15/5	5/5	12/5	-	-	-	-	-	x	x	x	-	-
ZDU (ZPE) 2,5-2/...	**5**	5/5	12/5	15/5	5/5	12/5	-	-	-	-	-	x	-	-	-	-
ZDU (ZPE) 2.5N...	**5,1**	5/5	10/5	-	5/5	8/5	-	-	-	-	-	-	-	-	-	ZAD 9/4
ZDU (ZPE) 35...	**16**	5/5	12/5	15/5	5/5	12/5	-	-	-	-	-	x	x	x	-	-
ZDU (ZPE) 4...	**6**	5/6	12/6	12/6	5/6	12/6	-	-	-	-	-	x	x	x	-	-
ZDU (ZPE) 4-2...	**6**	5/6	12/6	12/6	5/6	12/6	-	-	-	-	-	-	-	-	-	-
ZDU (ZPE) 6...	**8**	5/8	12/8	15/5	5/8	12/8	-	-	-	-	-	x	x	x	-	-
ZDU (ZPE) 6-2...	**8**	5/8	12/8	12/6	5/8	12/8	-	-	-	-	-	-	-	-	-	-
ZDU 1.5...	**3,5**	5/3.5	12/3.5	-	5/3.5	12/3.5	-	-	-	-	-	-	x	x	-	-
ZDUA (ZPEA) 2,5-2	**5**	5/5	8/5	15/5	5/5	8/5	-	-	-	-	-	x	-	-	-	-
ZDUA 2,5-2N	**5**	5/5	10/5	10/5	5/5	8/5	-	-	-	-	-	-	-	-	-	-
ZDUB (ZPEB) 2,5-2/...	**5**	5/5	8/5	15/5	5/5	8/5	-	-	-	-	-	x	-	-	-	-
ZEI 16	**16**	5/5	12/5	15/5	5/5	12/5	-	-	-	-	-	x	-	-	-	-
ZEI 6	**10**	5/8	12/6	12/6	5/8	12/6	-	-	-	-	-	x	x	x	-	-
ZEW 35/2	**8**	5/8	-	-	5/8	-	-	-	-	-	-	-	-	-	x	-
ZIA 1,5 ...	**5,08**	5/5	8/5	15/5	5/5	8/5	-	-	-	-	-	x	-	-	-	-
ZMAK 2,5...	**5**	5/5	10/5	15/5	5/5	8/5	-	-	-	-	-	x	-	-	-	-
ZNT 10/S	**10**	5/5	-	-	5/5	-	-	-	-	-	-	-	-	-	-	-
ZNT 16/S	**12**	5/5	-	-	5/5	-	-	-	-	-	-	-	-	-	-	-
ZNT 2,5/S	**5**	5/5	10/5	10/5	5/5	8/5	-	-	-	-	-	-	-	-	-	-
ZNT 4/S	**6**	5/6	10/6	12/6	5/6	8/6	-	-	-	-	-	-	-	-	-	-
ZNT 6/S	**8**	5/8	10/8	12/6	5/8	8/8	-	-	-	-	-	-	-	-	-	-
ZP 2,5...	**5,1**	5/5	10/5	10/5	5/5	8/5	-	-	-	-	-	-	-	-	-	-
ZPE 16-2/1 AN	**12**	5/8	12/6	12/6	5/8	12/6	-	-	-	-	-	-	-	-	-	-
ZPV 1,5	**5,08**	5/5	12/5	15/5	5/5	12/5	-	-	-	-	-	x	-	-	-	-
ZRV 1,5...	**5**	5/5	8/5	10/5	5/5	8/5	-	-	-	-	-	x	-	-	-	-

Designation	Terminal width	DEK	WS	ZS	DEK MM	WS MM	SchT 7	WAD 5	WAD 8	WAD 12	WAD 27	ZGB 15 / ZGB 30	BZT 1	BZT 2	EM 8/30	Other
ZSI 2,5...	**8**	5/8	12/5	15/5	5/8	12/5	-	-	-	-	-	x	-	-	-	-
ZSI 2,5/2...	**12**	5/5	12/5	15/5	5/5	12/5	-	-	-	-	-	x	-	-	-	-
ZSI 6-2/FC	**8**	5/6	12/6	12/6	5/6	12/6	-	-	-	-	-	-	-	-	-	-
ZT 2,5 ...	**5**	5/5	10/5	10/5	5/5	8/5	-	-	-	-	-	-	-	-	-	-
ZTD 6	**8**	5/8	12/6.5	-	5/8	-	-	-	-	-	-	-	-	-	-	-
ZTL 6	**8**	5/8	12/6.5	-	5/8	-	-	-	-	-	-	-	-	-	-	-
ZTPE 2,5 ...	**5**	5/5	10/5	10/5	5/5	8/5	-	-	-	-	-	-	-	-	-	-
ZTR 2,5...	**5**	5/5	12/5	15/5	5/5	12/5	-	-	-	-	-	x	-	-	-	-
ZTR 2,5-2...	**5**	5/5	14/5	10/5	5/5	12/5	-	-	-	-	-	-	-	-	-	-

DEK card – Dekafix standard printing

The Dekafix marker is the universal marker for terminals and plug-in connectors, as well as electronic modules from the Weidmüller product range. Dekafix provides you with a wide range of standard printing options. The system is particularly suitable for short sequences of numbers and is also available for customer-specific printing.

- In strips for fast installation
- Large selection of ready-to-use printed markers
- Excellent printing quality with the MC Laser
- Available in 4 widths

In the form of a card, the Dekafix (DEK) marker is the universal marker for the Weidmüller SAK, W, P and Z series. The markers lie flush in the marker channel which guarantees optimum and secure positioning.

Halogen Free

- The DEK marker is suitable for all wire and plug-in connectors, plus electronic assemblies from Weidmüller
- The system is particularly suitable for short number strings and is also available with custom printing
- Wide selection of ready-to-use, printed markers
- In strips for fast installation

Technical data

Material	Polyamide 66, halogen-free
UL 94 flammability rating	V2
Temperature range	-40 °C to 100 °C
Printing	Black

Ordering data

Qty	500 pcs 10 cards	
Pitch	DEK 5 = 5 mm : DEK 6 = 6 mm : DEK 6.5 = 6.5 mm : DEK 8 = 8 mm	
Printing variations	FW = consecutive horizontal	e.g. DEK 5 FW 1-50
	FS = consecutive vertical	e.g. DEK 5 FS 51-100
	FWZ = consecutive horizontal line	e.g. DEK 5 FWZ 1-10
	FSZ = consecutive vertical line	e.g. DEK 5 FSZ 21-30
	GW = identical horizontal	e.g. DEK 5 GW A
	GS = identical vertical	e.g. DEK 5 GS B

Specify colour and characters for special printing

DEK variant

Type	Order No.
DEK 5 FS 1-50	0473560001
DEK 5 FS 101-150	0473560101
DEK 5 FS 151-200	0473560151
DEK 5 FS 201-250	0473560201
DEK 5 FS 51-100	0473560051
DEK 5 FSZ 1-10	0460660001
DEK 5 FSZ 11-20	0460660011
DEK 5 FSZ 21-30	0460660021
DEK 5 FSZ 31-40	0460660031
DEK 5 FSZ 41-50	0460660041
DEK 5 FSZ 51-60	0460660051
DEK 5 FSZ 61-70	0460660061
DEK 5 FSZ 71-80	0460660071
DEK 5 FSZ 81-90	0460660081
DEK 5 FSZ 91-100	0460660091
DEK 5 FW 1,3,5,...99	1358460000
DEK 5 FW 1-50	0473460001
DEK 5 FW 101-150	0473460101
DEK 5 FW 151-200	0473460151
DEK 5 FW 2,4,...100	1358560000
DEK 5 FW 201-250	0473460201
DEK 5 FW 251-300	0473460251
DEK 5 FW 301-350	0473460301
DEK 5 FW 351-400	0473460351
DEK 5 FW 401-450	0473460401
DEK 5 FW 451-500	0473460451
DEK 5 FW 501-550	0473460501
DEK 5 FW 51-100	0473460051
DEK 5 FW 551-600	0473460551
DEK 5 FW 601-650	0473460601
DEK 5 FW 651-700	0473460651
DEK 5 FW 701-750	0473460701
DEK 5 FW 751-800	0473460751
DEK 5 FW 801-850	0473460801
DEK 5 FW 851-900	0473460851
DEK 5 FW 901-950	0473460901
DEK 5 FWZ 1,3,5-19	0235860000
DEK 5 FWZ 1-10	0523060001
DEK 5 FWZ 11-20	0523060011
DEK 5 FWZ 2,4,6-20	0236160000
DEK 5 FWZ 21,23,25-39	0235960000
DEK 5 FWZ 21-30	0523060021
DEK 5 FWZ 22,24,26-40	0236260000
DEK 5 FWZ 31-40	0523060031
DEK 5 FWZ 41,43,45-59	0236060000
DEK 5 FWZ 41-50	0523060041
DEK 5 FWZ 42,44,46-60	0236360000
DEK 5 FWZ 51-60	0523060051
DEK 5 FWZ 61-70	0523060061
DEK 5 FWZ 71-80	0523060071
DEK 5 FWZ 81-90	0523060081
DEK 5 FWZ 91-100	0523060091
DEK 5 FWZ L1-EIK	0354361203
DEK 5 FWZ L1-PE	0354361187
DEK 5 FWZ U,V,W,N,PE	0558360000
DEK 5 GW +	0576261198
DEK 5 GW -	0576261199
DEK 5 GW 1	0522660001
DEK 5 GW 10	0522660010
DEK 5 GW 11	0522660011
DEK 5 GW 12	0522660012
DEK 5 GW 13	0522660013
DEK 5 GW 14	0522660014
DEK 5 GW 15	0522660015
DEK 5 GW 16	0522660016
DEK 5 GW 17	0522660017
DEK 5 GW 18	0522660018
DEK 5 GW 19	0522660019
DEK 5 GW 2	0522660002
DEK 5 GW 20	0522660020
DEK 5 GW 21	0522660021
DEK 5 GW 3	0522660003

Type	Order No.
DEK 5 GW 4	0522660004
DEK 5 GW 5	0522660005
DEK 5 GW 6	0522660006
DEK 5 GW 7	0522660007
DEK 5 GW 8	0522660008
DEK 5 GW 9	0522660009
DEK 5 GW A	0522761021
DEK 5 GW B	0522761022
DEK 5 GW ERDE	0576261202
DEK 5 GW ERDE I.KR.	0576261203
DEK 5 GW F	0522761026
DEK 5 GW L	0522761032
DEK 5 GW L1	0522361075
DEK 5 GW L2	0522361076
DEK 5 GW L3	0522361077
DEK 5 GW N	0522761034
DEK 5 GW O	0522761035
DEK 5 GW PE	0537261187
DEK 5 GW R	0522761038
DEK 5 GW S	0522761039
DEK 5 GW T	0522761040
DEK 5 GW U	0522761041
DEK 5 GW V	0522761042
DEK 5 GW W	0522761043
DEK 5 GW X	0522761044
DEK 5/3,5 MC FSZ 1-10	1762320001
DEK 5/3,5 MC FSZ 101-110	1762320101
DEK 5/3,5 MC FSZ 11-20	1762320011
DEK 5/3,5 MC FSZ 111-120	1762320111
DEK 5/3,5 MC FSZ 121-130	1762320121
DEK 5/3,5 MC FSZ 21-30	1762320021
DEK 5/3,5 MC FSZ 31-40	1762320031
DEK 5/3,5 MC FSZ 41-50	1762320041
DEK 5/3,5 MC FSZ 51-60	1762320051
DEK 5/3,5 MC FSZ 61-70	1762320061
DEK 5/3,5 MC FSZ 71-80	1762320071
DEK 5/3,5 MC FSZ 81-90	1762320081
DEK 5/3,5 MC FSZ 91-100	1762320091
DEK 6 FS 1-50	0468760001
DEK 6 FS 101-150	0468760101
DEK 6 FS 51-100	0468760051
DEK 6 FSZ 1-10	0133360001
DEK 6 FSZ 11-20	0133360011
DEK 6 FSZ 21-30	0133360021
DEK 6 FSZ 31-40	0133360031
DEK 6 FSZ 41-50	0133360041
DEK 6 FW 1,3,5...99	1358660000
DEK 6 FW 1-50	0468660001
DEK 6 FW 101-150	0468660101
DEK 6 FW 151-200	0468660151
DEK 6 FW 2,4,...100	1358760000
DEK 6 FW 201-250	0468660201
DEK 6 FW 251-300	0468660251
DEK 6 FW 301-350	0468660301
DEK 6 FW 351-400	0468660351
DEK 6 FW 451-500	0468660451
DEK 6 FW 501-550	0468660501
DEK 6 FW 51-100	0468660051
DEK 6 FW 551-600	0468660551
DEK 6 FW 601-650	0468660601
DEK 6 FW 651-700	0468660651
DEK 6 FW 701-750	0468660701
DEK 6 FW 751-800	0468660751
DEK 6 FW 801-850	0468660801
DEK 6 FW 851-900	0468660851
DEK 6 FW 901-950	0468660901
DEK 6 FW 951-999	0468660951
DEK 6 FW L,N,PE	0632560000
DEK 6 FWZ 1-10	0518960001
DEK 6 FWZ 101-110	0518960101

Type	Order No.
DEK 6 FWZ 11-20	0518960011
DEK 6 FWZ 21-30	0518960021
DEK 6 FWZ 31-40	0518960031
DEK 6 FWZ 41-50	0518960041
DEK 6 FWZ 51-60	0518960051
DEK 6 FWZ 61-70	0518960061
DEK 6 FWZ 71-80	0518960071
DEK 6 FWZ 81-90	0518960081
DEK 6 FWZ 91-100	0518960091
DEK 6 FWZ L1-ERDE I.KRE	0631961203
DEK 6 FWZ L1-PE	0631961187
DEK 6 GW +	1318061198
DEK 6 GW -	1318061199
DEK 6 GW 1	0526960001
DEK 6 GW 10	0526960010
DEK 6 GW 2	0526960002
DEK 6 GW 3	0526960003
DEK 6 GW 4	0526960004
DEK 6 GW 5	0526960005
DEK 6 GW 6	0526960006
DEK 6 GW 8	0526960008
DEK 6 GW ERDE	1318061202
DEK 6 GW PE	1318061187
DEK 6,5 FS 1-50	0468260001
DEK 6,5 FS 101-150	0468260101
DEK 6,5 FS 51-100	0468260051
DEK 6,5 FSZ 1-10	0407360001
DEK 6,5 FSZ 11-20	0407360011
DEK 6,5 FW 1-50	0468160001
DEK 6,5 FW 101-150	0468160101
DEK 6,5 FW 51-100	0468160051
DEK 6,5 FW L1-ERDE I.KR	0632161203
DEK 6,5 FWZ 1-10	0519060001
DEK 6,5 FWZ 11-20	0519060011
DEK 6,5 FWZ 21-30	0519060021
DEK 8 FS 1-50 TAMPOPR.	1653350001
DEK 8 FSZ 1-10	1289660001
DEK 8 FSZ 11-20	1289660011
DEK 8 FSZ 21-30	1289660021
DEK 8 FSZ 31-40	1289660031
DEK 8 FSZ 41-50	1289660041
DEK 8 FSZ 51-60	1289660051
DEK 8 FW 1-50 TAMPOPR.	1653340001
DEK 8 FW 51-100 TAMPOP.	1653340051
DEK 8 FWZ 1-10	1276960001
DEK 8 FWZ 11-20	1276960011
DEK 8 FWZ 21-30	1276960021
DEK 8 FWZ 31-40	1276960031
DEK 8 FWZ 41-50	1276960041
DEK 8 FWZ 51-60	1276960051

DEK – Dekafix MultiCard

Universal basics for marking connectors

Fast installation, individually or combined

Cable and plug-in connectors as well as electronics modules can be quickly and easily marked using Dekafix markers. Intended for short number strings, strip installation is completed in a single step.

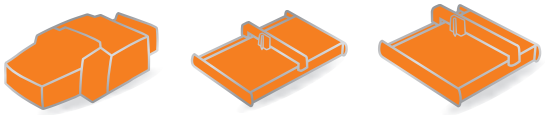

PrintJet ADVANCED | Plotter MCP Plus 2 | Plotter MCP Basic 2

Dekafix - the benefits to you

- Universal: can be used for sequences of numbers of different lengths and multi-line labelling
- The best orientation: simple assignment thanks to additional information on the project marking surface
- Easy to install: simple snap-on feature for individual or multiple signs
- High contrast: the best printed image and easy to read

You have a project marking surface on the MultiCard format for additional information which makes assignment during assembly much simpler.

As an option it is also available without the project marking surface: the plus-series versions come in whole strips for particularly fast assembly.

Halogen Free

Technical data

Material	Polyamide 66, halogen-free
UL 94 flammability rating	V2
Temperature range	-40 °C to 100 °C

Ordering data

Colour	International colour code colours, not contained in the range, are available on request.
Special printing	Specify special printing and colours per using the M-Print® PRO software.
Printing	Black or colour
Possible printing systems	PrintJet ADVANCED, PrintJet PRO, MCP Plus 2, MCP Basic 2
Notes on mounting	Mount in strips when the marker pitch (width) corresponds to the pitch of the terminals. For example, DEK 5 mm pitch for terminals with 5 mm pitch such as the WDU 2.5.
	Mount individual markers when the terminal pitch is larger than the marker pitch (width). For example, DEK 6.5 mount individually on WDU 6 terminals.
Minimum order quantity	1 pack = 5 cards

Dekafix MultiCard

DEK 5/3.5 — 3.5 mm

Terminal marker

DEK 5/3.5 PLUS — 3.5 mm

Terminal marker

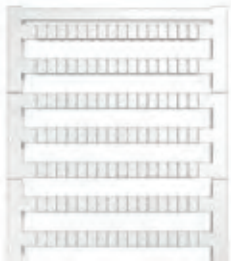

Technical data

	DEK 5/3.5	DEK 5/3.5 PLUS
Material	Polyamide 66	Polyamide 66
Fire class acc. to UL 94	V-2	V-2
Ambient temperature (operational)	-40 °C...100 °C	-40 °C...100 °C
Width	3.5 mm	3.5 mm
Length	5 mm	5 mm

Ordering data

MultiCard Blank		DEK 5/3.5			DEK 5/3.5 PLUS		
		Type	Qty.	Order No.	Type	Qty.	Order No.
White	❍	DEK 5/3.5 MC NE WS	500	1755270000	DEK 5/3.5 PLUS MC NE WS	1600	2003750000
Blue	●						
Grey	●						
Green	●						
Yellow	●						
Red	●						
Orange	●						
MultiCard custom printing							
To customer specification		DEK 5/3.5 MC SDR	100	1767730000	DEK 5/3.5 PLUS MC SDR	320	2007790000

Technical drawing / application

Dekafix MultiCard

DEK 5/5 — 5 mm

Terminal marker

DEK 5/5 PLUS — 5 mm

Terminal marker

Technical data

Material	Polyamide 66	Polyamide 66
Fire class acc. to UL 94	V-2	V-2
Ambient temperature (operational)	-40 °C...100 °C	-40 °C...100 °C
Width	5 mm	5 mm
Length	5 mm	5 mm

Ordering data

MultiCard Blank		Type	Qty.	Order No.	Type	Qty.	Order No.
White	○	DEK 5/5 MC NE WS	1000	1609801044	DEK 5/5 PLUS MC NE WS	1000	1854490000
Blue	●	DEK 5/5 MC NE BL	1000	1609801693			
Grey	●	DEK 5/5 MC NE GR	1000	1609801691			
Green	●	DEK 5/5 MC NE GN	1000	1609801688			
Yellow	●	DEK 5/5 MC NE GE	1000	1609801687	DEK 5/5 PLUS MC NE GE	1000	1907520000
Red	●	DEK 5/5 MC NE RT	1000	1609801686			
Orange	●	DEK 5/5 MC NE OR	1000	1238340000			
MultiCard custom printing							
To customer specification		DEK 5/5 MC SDR	200	1609810000	DEK 5/5 PLUS MC SDR	200	1854500000

Technical drawing / application

Dekafix MultiCard

DEK 5/5 S — 5 mm

Terminal marker

DEK 5/6 — 6 mm

Terminal marker

Technical data

	DEK 5/5 S	DEK 5/6
Material	Polyamide 66	Polyamide 66
Fire class acc. to UL 94	V-2	V-2
Ambient temperature (operational)	-40 °C...100 °C	-40 °C...100 °C
Width	5 mm	6 mm
Length	5 mm	5 mm

Ordering data

MultiCard Blank		Type	Qty.	Order No.	Type	Qty.	Order No.
White	❍	DEK 5/5 S MC NE WS	400	1341620000	DEK 5/6 MC NE WS	1000	1609820000
Blue	●						
Grey	●						
Green	●						
Yellow	●						
Red	●						
Orange	●				DEK 5/6 MC NE OR	1000	1912090000
MultiCard custom printing							
To customer specification		DEK 5/5 S MC SDR	80	1341590000	DEK 5/6 MC SDR	200	1609830000

Technical drawing / application

Dekafix MultiCard

DEK 5/6 PLUS — 6 mm

Terminal marker

DEK 5/6.5 — 6.5 mm

Terminal marker

Technical data

	DEK 5/6 PLUS	DEK 5/6.5
Material	Polyamide 66	Polyamide 66
Fire class acc. to UL 94	V-2	V-2
Ambient temperature (operational)	-40 °C...100 °C	-40 °C...100 °C
Width	6 mm	6.5 mm
Length	5 mm	5 mm

Ordering data

MultiCard Blank		DEK 5/6 PLUS			DEK 5/6.5		
		Type	Qty.	Order No.	Type	Qty.	Order No.
White	○	DEK 5/6 PLUS MC NE WS	1000	1011320000	DEK 5/6.5 MC NE WS	900	1609840000
Blue	●						
Grey	●						
Green	●						
Yellow	●						
Red	●						
Orange	●	DEK 5/6 PLUS MC NE OR	1000	1378720000			
MultiCard custom printing							
To customer specification		DEK 5/6 PLUS MC SDR	200	1038650000	DEK 5/6.5 MC SDR	180	1609850000

Technical drawing / application

Dekafix MultiCard

	DEK 5/6.5 PLUS	DEK 5/7.5
	6.5 mm	7.5 mm
	Terminal marker	Terminal marker

Technical data

Material	Polyamide 66	Polyamide 66
Fire class acc. to UL 94	V-2	V-2
Ambient temperature (operational)	-40 °C...100 °C	-40 °C...100 °C
Width	6.5 mm	7.5 mm
Length	5 mm	5 mm

Ordering data

MultiCard Blank		Type	Qty.	Order No.	Type	Qty.	Order No.
White	○	DEK 5/6.5 PLUS MC NE WS	900	1046340000	DEK 5/7.5 MC NE WS	320	1720620000
Blue	●						
Grey	●						
Green	●						
Yellow	●	DEK 5/6.5 PLUS MC NE GE	900	1364020000			
Red	●						
Orange	●						
MultiCard custom printing							
To customer specification		DEK 5/6.5 PLUS MC SDR	180	1046360000	DEK 5/7.5 MC SDR	64	1770490000

Technical drawing / application

DEK MultiCard – markers for terminals and connectors

Dekafix MultiCard

	DEK 5/8	DEK 5/8 PLUS
	8 mm	8 mm
	Terminal marker	Terminal marker

Technical data

Material	Polyamide 66	Polyamide 66
Fire class acc. to UL 94	V-2	V-2
Ambient temperature (operational)	-40 °C...100 °C	-40 °C...100 °C
Width	8 mm	8 mm
Length	5 mm	5 mm

Ordering data

MultiCard Blank		Type	Qty.	Order No.	Type	Qty.	Order No.
White	❍	DEK 5/8 MC NE WS	800	**1856740000**	DEK 5/8 PLUS MC NE WS	800	**1046350000**
Blue	●						
Grey	●						
Green	●						
Yellow	●						
Red	●						
Orange	●						
MultiCard custom printing							
To customer specification		DEK 5/8 MC SDR	160	**1856750000**	DEK 5/8 PLUS MC SDR	160	**1046370000**

Technical drawing / application

Dekafix MultiCard

DEK 5/8-11.5 — 8 mm

Terminal marker

DEK 5/30 — 30 mm

Terminal marker

Technical data

Material	Polyamide 66	Polyamide 66
Fire class acc. to UL 94	V-2	V-2
Ambient temperature (operational)	-40 °C...100 °C	-40 °C...100 °C
Width	8 mm	30 mm
Length	5 mm	5 mm

Ordering data

Width		Colour	Type	Qty.	Order No.	Type	Qty.	Order No.
MultiCard Blank								
8 mm	❍	White	DEK 5/8-11.5 MC NE WS	500	**1341630000**	DEK 5/90 MC NE WS	100	**1951920000**
8 mm	●	Yellow				DEK 5/30 MC NE GE	100	**1350340000**
MultiCard custom printing								
						DEK 5/30 MC SDR	40	**1025680000**
			For Weidmüller u-remote					

Technical drawing / application

WS MultiCard

Custom design for long character strings

Fast installation, individually or combined

Specifically for the W-series cable connectors, the WS markers were developed. There is enough space on the printing area for long and individual character strings, even for multi-line layouts. The fact that the WS signs are system compatible means that you can use them also for the complete universal range Klippon® Connect. The MultiCard format means that the WS marker can be labelled with both the PrintJet ADVANCED inkjet printer and with plotters.

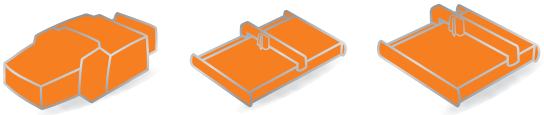

PrintJet ADVANCED | Plotter MCP Plus 2 | Plotter MCP Basic 2

WS markers - the benefits to you

- Universal: can be used for sequences of numbers of different lengths and multi-line labelling
- The best orientation: simple assignment thanks to additional information on the project marking surface
- Easy to install: simple snap-on feature for individual or multiple signs
- High contrast: the best printed image and easy to read

Between 3 to 10 characters which are easy to read fit on the WS markers (marker length: 5 to 15 mm).

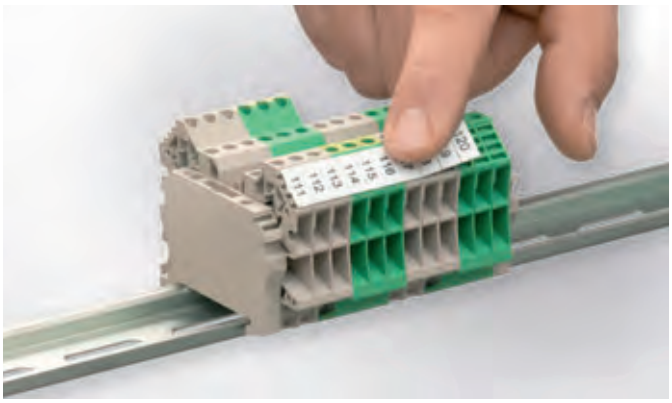

As an option it is also available without the project marking surface: the plus series versions come in whole strips for particularly fast assembly.

Halogen Free

Technical data

Material	Polyamide 66, halogen-free
UL 94 flammability rating	V2
Temperature range	-40 °C to 100 °C

Ordering data

Colour	International colour code colours, not contained in the range, are available on request.
Special printing	Specify special printing and colours per using the M-Print® PRO software.
Printing	Black or colour
Possible printing systems	PrintJet ADVANCED, PrintJet PRO, MCP Plus 2, MCP Basic 2
Minimum order quantity	1 pack = 5 cards

WS MultiCard

WS 10/3.5 PLUS — 3.5 mm

Terminal marker

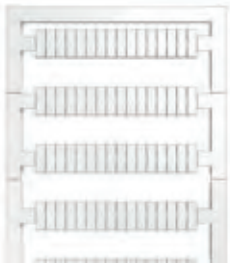

WS 12/3.5 — 3.5 mm

Terminal marker

Technical data

	WS 10/3.5 PLUS	WS 12/3.5
Material	Polyamide 66	Polyamide 66
Fire class acc. to UL 94	V-2	V-2
Ambient temperature (operational)	-40 °C...100 °C	-40 °C...100 °C
Width	3.5 mm	3.5 mm
Length	10 mm	12 mm

Ordering data

MultiCard Blank		WS 10/3.5 PLUS			WS 12/3.5		
		Type	Qty.	Order No.	Type	Qty.	Order No.
White	❍	WS 10/3.5 PLUS MC NE WS	960	2003760000	WS 12/3.5 MC NE WS	600	1778270000
Blue	●						
Yellow	●						
Orange	●						
Red	●						
Green	●						
Violet	●						
Brown	●						
Grey	●						
MultiCard custom printing							
To customer specification		WS 10/3.5 PLUS MC SDR	192	2007760000	WS 12/3.5 MC SDR	120	1778280000

Technical drawing / application

WS MultiCard

	WS 8/5	WS 8/5 PLUS
	5 mm	5 mm
	Terminal marker	Terminal marker

Technical data

Material	Polyamide 66	Polyamide 66
Fire class acc. to UL 94	V-2	V-2
Ambient temperature (operational)	-40 °C...100 °C	-40 °C...100 °C
Width	5 mm	5 mm
Length	8 mm	8 mm

Ordering data

MultiCard Blank		Type	Qty.	Order No.	Type	Qty.	Order No.
White	❍	WS 8/5 MC NE WS	720	**1640740000**	WS 8/5 PLUS MC NE WS	600	**1951870000**
Blue	●	WS 8/5 MC NE BL	720	**1773521693**			
Yellow	●	WS 8/5 MC NE GE	720	**1773521687**			
Orange	●	WS 8/5 MC NE OR	720	**1773521690**			
Red	●	WS 8/5 MC NE RT	720	**1773521686**			
Green	●						
Violet	●						
Brown	●						
Grey	●						
MultiCard custom printing							
To customer specification		WS 8/5 MC SDR	144	**1640750000**	WS 8/5 PLUS MC SDR	120	**1038790000**

Technical drawing / application

WS MultiCard

WS 10/5 — 5 mm

Terminal marker

WS 10/5 PLUS — 5 mm

Terminal marker

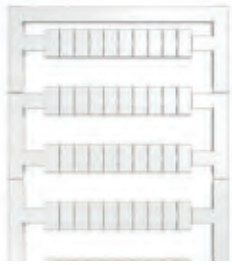

Technical data

	WS 10/5	WS 10/5 PLUS
Material	Polyamide 66	Polyamide 66
Fire class acc. to UL 94	V-2	V-2
Ambient temperature (operational)	-40 °C...100 °C	-40 °C...100 °C
Width	5 mm	5 mm
Length	10 mm	10 mm

Ordering data

MultiCard Blank		WS 10/5 Type	Qty.	Order No.	WS 10/5 PLUS Type	Qty.	Order No.
White		WS 10/5 MC NE WS	720	**1635000000**	WS 10/5 PLUS MC NE WS	600	**1046380000**
Blue		WS 10/5 MC NE BL	720	**1773531693**			
Yellow		WS 10/5 MC NE GE	720	**1773531687**			
Orange							
Red		WS 10/5 MC NE RT	720	**1773531686**			
Green							
Violet							
Brown							
Grey							
MultiCard custom printing							
To customer specification		WS 10/5 MC SDR	144	**1635010000**	WS 10/5 PLUS MC SDR	120	**1046320000**

Technical drawing / application

WS MultiCard – markers for the universal range for Klippon® Connect

WS MultiCard

WS 10/5 M	5 mm	WS 10/5 M PLUS	5 mm
Terminal marker		Terminal marker	

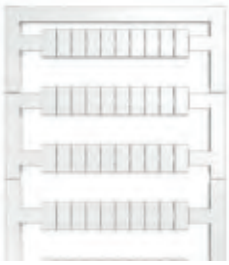

Technical data

Material	Polyamide 66	Polyamide 66
Fire class acc. to UL 94	V-2	V-2
Ambient temperature (operational)	-40 °C...100 °C	-40 °C...100 °C
Width	5 mm	5 mm
Length	10 mm	10 mm

Ordering data

MultiCard Blank		Type	Qty.	Order No.	Type	Qty.	Order No.
White	❍	WS 10/5 M MC NE WS	720	1792000000	WS 10/5 M PLUS MC NE WS	600	2003770000
Blue	●						
Yellow	●						
Orange	●						
Red	●						
Green	●						
Violet	●						
Brown	●						
Grey	●						
MultiCard custom printing							
To customer specification		WS 10/5 MC M SDR	144	1792010000	WS 10/5 M PLUS MC SDR	120	2007770000

Technical drawing / application

WS MultiCard

	WS 12/5	WS 12/5 PLUS
	5 mm	5 mm
	Terminal marker	Terminal marker

Technical data

Material	Polyamide 66	Polyamide 66
Fire class acc. to UL 94	V-2	V-2
Ambient temperature (operational)	-40 °C...100 °C	-40 °C...100 °C
Width	5 mm	5 mm
Length	12 mm	12 mm

Ordering data

MultiCard Blank		Type	Qty.	Order No.	Type	Qty.	Order No.
White		WS 12/5 MC NE WS	720	1609860000	WS 12/5 PLUS MC NE WS	600	1927510000
Blue		WS 12/5 MC NE BL	720	1773541693			
Yellow		WS 12/5 MC NE GE	720	1773541687			
Orange		WS 12/5 MC NE OR	720	1773541690			
Red		WS 12/5 MC NE RT	720	1773541686			
Green							
Violet							
Brown							
Grey							
MultiCard custom printing							
To customer specification		WS 12/5 MC SDR	144	1609870000	WS 12/5 PLUS MC SDR	120	1927520000

Technical drawing / application

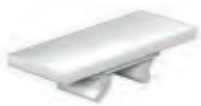

WS MultiCard – markers for the universal range for Klippon® Connect

WS MultiCard

WS 14/5	5 mm	WS 15/5	5 mm
Terminal marker		Terminal marker	

Technical data

Material	Polyamide 66	Polyamide 66
Fire class acc. to UL 94	V-2	V-2
Ambient temperature (operational)	-40 °C...100 °C	-40 °C...100 °C
Width	5 mm	5 mm
Length	14 mm	15 mm

Ordering data

MultiCard Blank		Type	Qty.	Order No.	Type	Qty.	Order No.
White		WS 14/5 MC NE WS	480	1768090000	WS 15/5 MC NE WS	480	1609880000
Blue							
Yellow					WS 15/5 MC NE GE	480	1773571687
Orange							
Red							
Green							
Violet							
Brown							
Grey							
MultiCard custom printing							
To customer specification		WS 14/5 MC SDR	96	1852980000	WS 15/5 MC SDR	96	1609890000

Technical drawing / application

WS MultiCard

WS 8/6 PLUS — 6 mm

Terminal marker

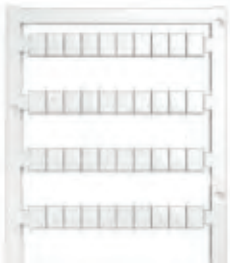

WS 10/6 — 6 mm

Terminal marker

Technical data

Material	Polyamide 66	Polyamide 66
Fire class acc. to UL 94	V-2	V-2
Ambient temperature (operational)	-40 °C...100 °C	-40 °C...100 °C
Width	6 mm	6 mm
Length	8 mm	10 mm

Ordering data

MultiCard Blank					
White		Type	Qty.	Order No.	Type	Qty.	Order No.
Blue		WS 8/6 PLUS MC NE WS	600	1951880000	WS 10/6 MC NE WS	600	1828450000
Yellow							
Orange							
Red							
Green							
Violet							
Brown							
Grey							
MultiCard custom printing							
To customer specification		WS 8/6 PLUS MC SDR	120	1038820000	WS 10/6 MC SDR	120	1828460000

Technical drawing / application

WS MultiCard – markers for the universal range for Klippon® Connect

WS MultiCard

WS 10/6 PLUS — 6 mm

Terminal marker

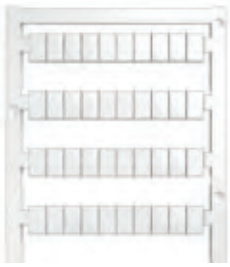

WS 10/6 M — 6 mm

Terminal marker

Technical data

Material	Polyamide 66	Polyamide 66
Fire class acc. to UL 94	V-2	V-2
Ambient temperature (operational)	-40 °C...100 °C	-40 °C...100 °C
Width	6 mm	6 mm
Length	10 mm	10 mm

Ordering data

MultiCard Blank		Type	Qty.	Order No.	Type	Qty.	Order No.
White	❍	WS 10/6 PLUS MC NE WS	600	1046390000	WS 10/6 M MC NE WS	600	1818400000
Blue	●				WS 10/6 MC M NE BL	600	1069080000
Yellow	●				WS 10/6 MC M NE GE	600	1917430000
Orange	●						
Red	●				WS 10/6 MC M NE RT	600	1917440000
Green	●				WS 10/6 MC M NE GN	600	1917420000
Violet	●				WS 10/6 MC M NE VI	600	1069090000
Brown	●						
Grey	●						
MultiCard custom printing							
To customer specification		WS 10/6 PLUS MC SDR	120	1046330000	WS 10/6 MC M SDR	120	1818410000

Technical drawing / application

WS MultiCard

WS 10/6 M PLUS — 6 mm

Terminal marker

WS 12/6 — 6 mm

Terminal marker

Technical data

	WS 10/6 M PLUS	WS 12/6
Material	Polyamide 66	Polyamide 66
Fire class acc. to UL 94	V-2	V-2
Ambient temperature (operational)	-40 °C...100 °C	-40 °C...100 °C
Width	6 mm	6 mm
Length	10 mm	12 mm

Ordering data

MultiCard Blank		WS 10/6 M PLUS			WS 12/6		
		Type	Qty.	Order No.	Type	Qty.	Order No.
White		WS 10/6 M PLUS MC NE WS	600	2003780000	WS 12/6 MC NE WS	600	1609900000
Blue					WS 12/6 MC NE BL	600	1773551693
Yellow					WS 12/6 MC NE GE	600	1773551687
Orange					WS 12/6 MC NE OR	600	1773551690
Red					WS 12/6 MC NE RT	600	1773551686
Green							
Violet					WS 12/6 MC NE VI	600	1773551689
Brown					WS 12/6 MC NE BR	600	1773551692
Grey							
MultiCard custom printing							
To customer specification		WS 10/6 M PLUS MC SDR	120	2007780000	WS 12/6 MC SDR	120	1609910000

Technical drawing / application

WS MultiCard – markers for the universal range for Klippon® Connect

WS MultiCard

WS 12/6 PLUS — 6 mm

Terminal marker

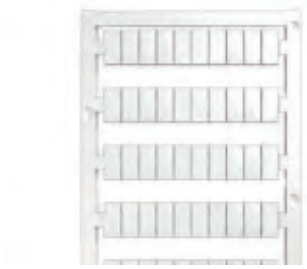

WS 12/6.5 — 6.5 mm

Terminal marker

Technical data

Material	Polyamide 66	Polyamide 66
Fire class acc. to UL 94	V-2	V-2
Ambient temperature (operational)	-40 °C...100 °C	-40 °C...100 °C
Width	6 mm	6.5 mm
Length	12 mm	12 mm

Ordering data

MultiCard Blank	
White	❍
Blue	●
Yellow	●
Orange	●
Red	●
Green	●
Violet	●
Brown	●
Grey	●
MultiCard custom printing	
To customer specification	

Type	Qty.	Order No.
WS 12/6 PLUS MC NE WS	600	**1927530000**
WS 12/6 PLUS MC SDR	120	**1927540000**

Type	Qty.	Order No.
WS 12/6.5 MC NE WS	540	**1609920000**
WS 12/6.5 MC NE BL	540	**1773561693**
WS 12/6.5 MC NE GE	540	**1773561687**
WS 12/6.5 MC NE RT	540	**1773561686**
WS 12/6.5 MC SDR	108	**1609930000**

Technical drawing / application

WS MultiCard

WS 10/8 PLUS — 8 mm

Terminal marker

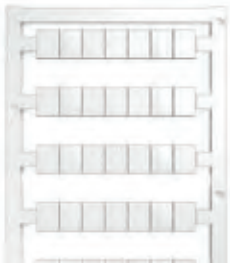

WS 12/8 PLUS — 8 mm

Terminal marker

Technical data

Material	Polyamide 66	Polyamide 66
Fire class acc. to UL 94	V-2	V-2
Ambient temperature (operational)	-40 °C...100 °C	-40 °C...100 °C
Width	8 mm	8 mm
Length	10 mm	12 mm

Ordering data

MultiCard Blank		Type	Qty.	Order No.	Type	Qty.	Order No.
White	❍	WS 10/8 PLUS MC NE WS	420	1905950000	WS 12/8 PLUS MC NE WS	420	1906000000
Blue	●						
Yellow	●						
Orange	●						
Red	●						
Green	●						
Violet	●						
Brown	●						
Grey	●						
MultiCard custom printing							
To customer specification		WS 10/8 PLUS MC SDR	84	1906030000	WS 12/8 PLUS MC SDR	84	1906010000

Technical drawing / application

WS MultiCard – markers for the universal range for Klippon® Connect

WS MultiCard

WS 7.8/9.2 PLUS — 9.2 mm

Terminal marker

WS 10/12 — 12 mm

Terminal marker

Technical data

Material	Polyamide 66	Polyamide 66
Fire class acc. to UL 94	V-2	V-2
Ambient temperature (operational)	-40 °C...100 °C	-40 °C...100 °C
Width	9.2 mm	12 mm
Length	7.8 mm	10 mm

Ordering data

MultiCard Blank		Type	Qty.	Order No.	Type	Qty.	Order No.
White					WS 10/12 MC NE WS	300	1905970000
Blue							
Yellow							
Orange							
Red							
Green							
Violet							
Brown							
Grey		WS 7.8/9.2 PLUS MC NE GR	360	1208970000			
MultiCard custom printing							
To customer specification		WS 7.8/9.2 PLUS MC SDR	72	1270640000	WS 10/12 MC SDR	60	1906060000

Technical drawing / application

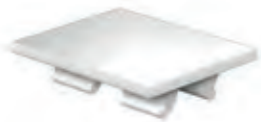

WS MultiCard

WS 10/15 — 15 mm

Terminal marker

Technical data

Material	Polyamide 66
Fire class acc. to UL 94	V-2
Ambient temperature (operational)	-40 °C...100 °C
Width	15 mm
Length	10 mm

Ordering data

MultiCard Blank		Type	Qty.	Order No.
White	❍	WS 10/15 MC NE WS	240	1854090000
Blue	●			
Yellow	●			
Orange	●			
Red	●			
Green	●			
Violet	●			
Brown	●			
Grey	●			
MultiCard custom printing				
To customer specification		WS 10/15 MC SDR	48	1854100000

Technical drawing / application

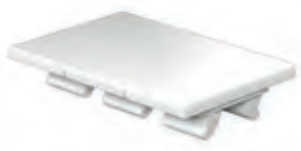

PM MultiCard

PM 2.7/2.6 — 2.6 mm

Terminal marker

Technical data

Material	Polyamide 66
Fire class acc. to UL 94	V-2
Ambient temperature (operational)	-40 °C...100 °C
Width	2.6 mm
Length	2.7 mm

Ordering data

MultiCard Blank		Type	Qty.	Order No.
White	❍	PM 2.7/2.6 MC NE WS	960	1323710000
MultiCard custom printing				
To customer specification		PM 2.7/2.6 MC SDR	192	1323700000

Technical drawing / application

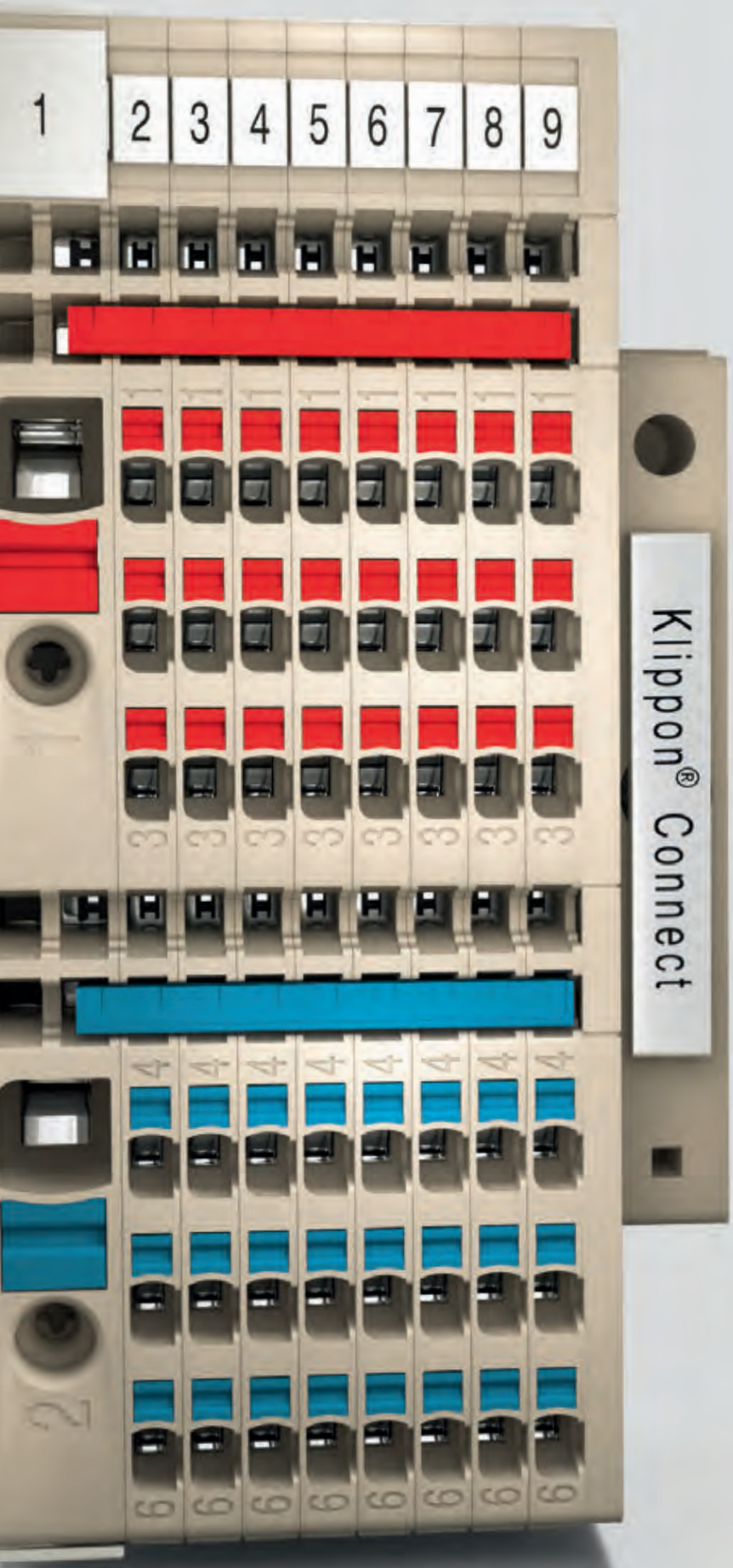
1
2
3
4
5
6
7
8
9
Klippon® Connect

1
2
3
Klippon® Connect

ZS MultiCard

Amazing functionality thanks to time-saving folding mechanism

An extensive marking area and distinct handling advantages

The ZS markers were specially designed for the Z-series, their functionality stands out thanks to a time-saving folding mechanism: without removing the markers, cross-connectors are still easily accessible. This is an advantage in terms of handling when it comes to quick exchanges or fast assembly. Fitted with the proven snap-on system, individual signs or whole strips can be fitted in the fastest possible time; their large marking surface means that they provide absolutely legible labelling.

ZS – the benefits to you

- Intelligent: foldable hinges for the best possible assembly process with cross-connectors
- Optimised: large labelling surfaces give you the best overview
- Application-specific: tried-and-tested MultiCard format markers

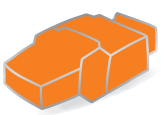

PrintJet ADVANCED

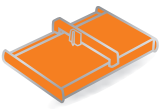

Plotter MCP Plus 2

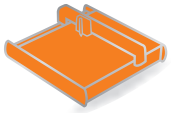

Plotter MCP Basic 2

Foldable hinges for easy assembly of cross-connectors; shield lengths of up to 15 mm for long series of characters.

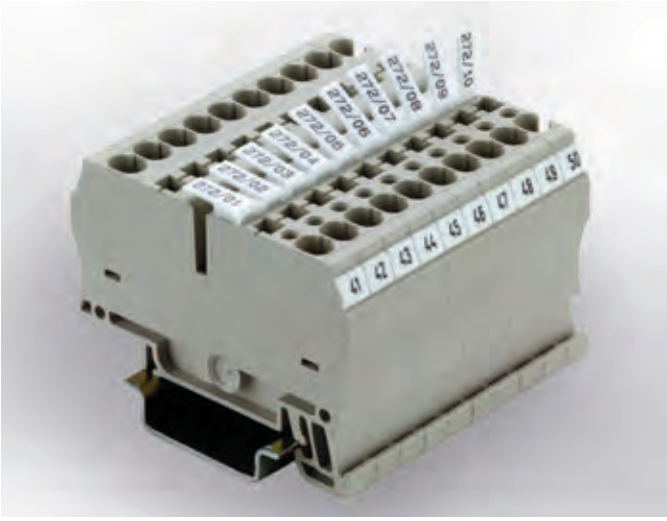

Halogen Free

Technical data

Material	Polyamide 66, halogen-free
UL 94 flammability rating	V2
Temperature range	-40 °C to 100 °C

Ordering data

Colour	International colour code colours, not contained in the range, are available on request.
Special printing	Specify special printing and colours per using the M-Print® PRO software.
Printing	Black or colour
Possible printing systems	PrintJet ADVANCED, PrintJet PRO, MCP Plus 2, MCP Basic 2
Minimum order quantity	1 pack = 5 cards

ZS MultiCard

ZS 10/5	5 mm	ZS 15/5	5 mm
Terminal marker		Terminal marker	

Technical data

Material	Polyamide 66	Polyamide 66
Fire class acc. to UL 94	V-2	V-2
Ambient temperature (operational)	-40 °C...100 °C	-40 °C...100 °C
Width	5 mm	5 mm
Length	10 mm	15 mm

Ordering data

MultiCard Blank			
White ❍	**Type**	**Qty.**	**Order No.**
	ZS 10/5 MC NE WS	480	**1610000000**
MultiCard custom printing			
To customer specification	ZS 10/5 MC SDR	96	**1610010000**

Type	**Qty.**	**Order No.**
ZS 15/5 MC NE WS	480	**1646630000**
ZS 15/5 MC SDR	480	**1646640000**

Technical drawing / application

ZS MultiCard

ZS 12/6 — 6 mm

Terminal marker

Technical data

Material	Polyamide 66
Fire class acc. to UL 94	V-2
Ambient temperature (operational)	-40 °C...100 °C
Width	6 mm
Length	12 mm

Ordering data

MultiCard Blank		Type	Qty.	Order No.
White	❍	ZS 12/6 MC NE WS	400	1610020000
MultiCard custom printing				
To customer specification		ZS 12/6 MC SDR	80	1610030000

Technical drawing / application

WAD 5
Weidmüller
ZEW

MF – MultiFit MultiCard

For manufacturer-independent marking

The adaptable range of markers

For manufacturer-independent marking of components, we have developed the adaptable MultiFit marker range. Without having to give up the highly professional printing you get with Weidmüller's marking system, you can use the other manufacturer's components that you are used to, if you wish, and combine them with Weidmüller's MultiFit markers. Designed for the clamping devices of different vendors, these markers fit seamlessly into your marking tasks and solve your desired labelling jobs admirably. MultiFit markers are suitable for components made by the following manufacturers: Allen-Bradley, Beckhoff, Cabur, Entrelec, Festo, Legrand, Murrelektonik, Phoenix Contact, Siemens, Telemecanique, Wago, Wieland and Woertz.

MultiFit – the benefits to you

- In line with market requirements: for components from 14 of the best-known manufacturers.
- Can be integrated: suitable for a variety of terminals
- High-quality printing using Weidmüller's marking system

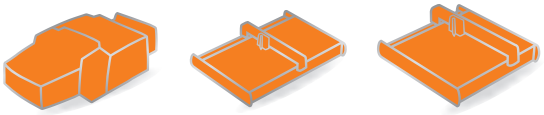

PrintJet ADVANCED | Plotter MCP Plus 2 | Plotter MCP Basic 2

Manufacturer-independent marking: almost complete coverage of all major components on the market.

A MultiFit sample box contains all the variants of the markers and helps you when planning the application by giving you the option of checking MultiFit markers to be used against your chosen components.
Order No. 1166330000

Halogen Free

Technical data

Material	Polyamide 66, halogen-free
UL 94 flammability rating	V2
Temperature range	-40 °C to 100 °C

Ordering data

Colour	International colour code colours, not contained in the range, are available on request.
Special printing	Specify special printing and colours per using the M-Print® PRO software.
Printing	Black or colour
Possible printing systems	PrintJet ADVANCED, PrintJet PRO, MCP Plus 2, MCP Basic 2
Minimum order quantity	1 pack = 5 cards

Application options

	MF 5/4 MF 5/5 MF 5/6 MF 5/10 MF 5/12	MF-W 5/5 Mini	MF-W 9/4 MF-W 9/5 MF-W 9/6	MF-W 9/5 F MF-W 9/4.2 F MF-W 9/5.2 F MF-W 9/6.2 F
Wago		● Similar to the WagoMini WSB Type 248-...264-...	● Similar to the Wago WSB Type 209-...249-...	● Similar to the Wago WMB Type 793-...794-... For Wago TopJob S
Phoenix	●			
Wieland				
Legrand		●	●	●
Entrelec		●		
Télémecanique				

	MF 8/5 MF 10/5 MF 12/5 MF 10/6	MF 10/8 MF 10/10	MF 4/5.2	MF 5/7.5
Wago	●			
Phoenix	●	● ZB 8 ZB 10	● BN-ZB 5.2	● BN-ZB 7.5
Wieland	●			
Legrand	●			
Entrelec	●	●		
Télémecanique	●			
Adels RKW				● BZ 14

	MF 10/5 CABUR MF 12/5 CABUR	MF-SI	MF-WO	MFF	MF-ABB 12/5 MF-ABB 12/6 MF-ABB 12/8
Siemens		●			
Woertz			●		
Festo				●	
Cabur	● Cabur				
ABB					● ZS4... ZS6... ZS8... SNK Series

● = OK
(Please select the marker according to the width of the terminal)

Please note:
The recommended applications given above do not release the user from his obligation to check the applicability in each individual application. The marker/terminal combination should, in each case, be chosen in such a way, that either the marker pitch matches the terminal pitch, or the marker pitch is smaller than the terminal pitch.

MF MultiCard – markers for use with other makes of terminals

MF MultiCard

MF 5/3.5	3.5 mm
Terminal marker	

MF 5/4	4 mm
Terminal marker	

Technical data

Material	Polyamide 66	Polyamide 66
Fire class acc. to UL 94	V-2	V-2
Ambient temperature (operational)	-40 °C...100 °C	-40 °C...100 °C
Application/manufacturer	Phoenix	Phoenix
Width	3.5 mm	4 mm
Length	5 mm	5 mm

Ordering data

MultiCard Blank						
White	❍	Type	Qty.	Order No.	Type	Qty.	Order No.
		MF 5/3.5 MC NE WS	800	1521010000	MF 5/4 MC NE WS	500	1877690000
MultiCard custom printing							
To customer specification		MF 5/3.5 MC SDR	800	1525840000	MF 5/4 MC SDR	100	1877670000

Technical drawing / application

MF MultiCard

MF 5/5 — 5 mm

Terminal marker

Technical data

Material	Polyamide 66
Fire class acc. to UL 94	V-2
Ambient temperature (operational)	-40 °C...100 °C
Application/manufacturer	Phoenix
Width	5 mm
Length	5 mm

Ordering data

MultiCard Blank	Type	Qty.	Order No.
White ❍	MF 5/5 MC NE WS	500	1816250000
MultiCard custom printing			
To customer specification	MF 5/5 MC SDR	100	1816320000

Technical drawing / application

MF MultiCard – markers for use with other makes of terminals

MF MultiCard

MF 8/5	5 mm	MF 10/5	5 mm
Terminal marker		Terminal marker	

Technical data

Material	Polyamide 66	Polyamide 66
Fire class acc. to UL 94	V-2	V-2
Ambient temperature (operational)	-40 °C...100 °C	-40 °C...100 °C
Application/manufacturer	Phoenix, Wieland, Legrand, Telemecanique, Entrelec, WAGO	Phoenix, Wieland, Legrand, Telemecanique, Entrelec
Width	5 mm	5 mm
Length	8 mm	10 mm

Ordering data

MultiCard Blank		Type	Qty.	Order No.	Type	Qty.	Order No.
White	❍	MF 8/5 MC NE WS	600	1677140000	MF 10/5 MC NE WS	600	1677160000
MultiCard custom printing							
To customer specification		MF 8/5 MC SDR	120	1677150000	MF 10/5 MC SDR	120	1677170000

Technical drawing / application

MF MultiCard

MF 10/5 CABUR — 5 mm

Terminal marker

MF 12/5 — 5 mm

Terminal marker

Technical data

Material	Polyamide 66	Polyamide 66
Fire class acc. to UL 94	V-2	V-2
Ambient temperature (operational)	-40 °C...100 °C	-40 °C...100 °C
Application/manufacturer	Cabur	Phoenix, Wieland, Legrand, Telemecanique, Entrelec, WAGO
Width	5 mm	5 mm
Length	10 mm	12 mm

Ordering data

MultiCard Blank			
White ❍	**Type**	**Qty.**	**Order No.**
	MF 10/5 CABUR MC NE WS	600	**1854510000**
MultiCard custom printing			
To customer specification			

Type	**Qty.**	**Order No.**
MF 12/5 MC NE WS	600	**1677180000**
MF 12/5 MC SDR	120	**1677190000**

Technical drawing / application

MF MultiCard – markers for use with other makes of terminals

MF MultiCard

MF 12/5 CABUR	5 mm
Terminal marker	

MF 4/5.2	5.2 mm
Terminal marker	

Technical data

Material	Polyamide 66	Polyamide 66
Fire class acc. to UL 94	V-2	V-2
Ambient temperature (operational)	-40 °C...100 °C	-40 °C...100 °C
Application/manufacturer	Cabur	Phoenix
Width	5 mm	5.2 mm
Length	12 mm	4 mm

Ordering data

MultiCard Blank					
White	❍	Type	Qty.	Order No.	Type	Qty.	Order No.
		MF 12/5 CABUR MC NE WS	600	1854520000	MF 4/5.2 MC NE WS	500	1907530000
MultiCard custom printing							
To customer specification		MF 12/5 MC CABUR SDR	120	1038670000	MF 4/5.2 MC SDR	100	1038690000

Technical drawing / application

MF MultiCard

MF 5/6 — 6 mm

Terminal marker

MF 10/6 — 6 mm

Terminal marker

Technical data

	MF 5/6	MF 10/6
Material	Polyamide 66	Polyamide 66
Fire class acc. to UL 94	V-2	V-2
Ambient temperature (operational)	-40 °C...100 °C	-40 °C...100 °C
Application/manufacturer	Phoenix	Phoenix, Wieland, Legrand, Telemecanique, Entrelec
Width	6 mm	6 mm
Length	5 mm	10 mm

Ordering data

MultiCard Blank					
White	❍	Type	Qty.	Order No.	Type / Qty. / Order No.
		MF 5/6 MC NE WS	500	1816260000	MF 10/6 MC NE WS / 600 / 1677220000
MultiCard custom printing					
To customer specification		MF 5/6 MC SDR	100	1816330000	MF 10/6 MC SDR / 120 / 1677230000

Technical drawing / application

MF MultiCard – markers for use with other makes of terminals

MF MultiCard

MF 5/7.5	7.5 mm	MF 10/8	8 mm
Terminal marker		Terminal marker	

Technical data

Material	Polyamide 66	Polyamide 66
Fire class acc. to UL 94	V-2	V-2
Ambient temperature (operational)	-40 °C...100 °C	-40 °C...100 °C
Application/manufacturer	Adels RKW, Phoenix	Phoenix, Entrelec
Width	7.5 mm	8 mm
Length	5 mm	10 mm

Ordering data

MultiCard Blank					
White	❍	Type	Qty.	Order No.	Type	Qty.	Order No.
		MF 5/7.5 MC NE WS	320	1877680000	MF 10/8 MC NE WS	350	1868440000
MultiCard custom printing							
To customer specification		MF 5/7.5 MC SDR	64	1877660000	MF 10/8 MC SDR	70	1868430000

Technical drawing / application

MF MultiCard

	MF 5/10	MF 10/10
	10 mm	10 mm
	Terminal marker	Terminal marker

Technical data

Material	Polyamide 66	Polyamide 66
Fire class acc. to UL 94	V-2	V-2
Ambient temperature (operational)	-40 °C...100 °C	-40 °C...100 °C
Application/manufacturer	Phoenix	Phoenix, Entrelec
Width	10 mm	10 mm
Length	5 mm	10 mm

Ordering data

MultiCard Blank					
White	❍	Type	Qty.	Order No.	Type	Qty.	Order No.
		MF 5/10 MC NE WS	250	1954050000	MF 10/10 MC NE WS	200	1856760000
MultiCard custom printing							
To customer specification		MF 5/10 MC SDR	50	1038730000	MF 10/10 MC SDR	40	1856770000

Technical drawing / application

MF MultiCard – markers for use with other makes of terminals

MF MultiCard

MF 5/12 | **12 mm**

Terminal marker

Technical data

Material	Polyamide 66
Fire class acc. to UL 94	V-2
Ambient temperature (operational)	-40 °C...100 °C
Application/manufacturer	Phoenix
Width	12 mm
Length	5 mm

Ordering data

MultiCard Blank		Type	Qty.	Order No.
White	❍	MF 5/12 MC NE WS	250	**1250090000**
MultiCard custom printing				
To customer specification		MF 5/12 MC SDR	50	**1250080000**

Technical drawing / application

MF MultiCard

	MFF 9/4	4 mm	MFF 10/6	6 mm
	Terminal marker		Terminal marker	

Technical data

Material	Polyamide 66	Polyamide 66
Fire class acc. to UL 94	V-2	V-2
Ambient temperature (operational)	-40 °C...100 °C	-40 °C...100 °C
Application/manufacturer	Festo	Festo
Width	4 mm	6 mm
Length	9 mm	10 mm

Ordering data

MultiCard Blank					
White	❍	Type	Qty.	Order No.	Type	Qty.	Order No.
Yellow	●	MFF 9/4 MC NE WS	500	1877720000	MFF 10/6 MC NE WS	600	1856780000
					MFF 10/6 MC NE GE	600	1957340000
MultiCard custom printing							
To customer specification		MFF 9/4 MC SDR	100	1877700000	MFF 10/6 MC SDR	120	1856790000

Technical drawing / application

MF MultiCard – markers for use with other makes of terminals

MF MultiCard

MF-W 9/3.5	3.5 mm
Terminal marker	

MF-W 9/4	4 mm
Terminal marker	

Technical data

Material	Polyamide 66	Polyamide 66
Fire class acc. to UL 94	V-2	V-2
Ambient temperature (operational)	-40 °C...100 °C	-40 °C...100 °C
Application/manufacturer	WAGO	WAGO, Legrand
Width	3.5 mm	4 mm
Length	9 mm	9 mm

Ordering data

MultiCard Blank						
White	❍	Type	Qty.	Order No.	Type	Qty.	Order No.
MultiCard custom printing							
To customer specification		MF-W 9/3.5F MC NE WS	800	1521040000	MF-W 9/4 MC NE WS	500	1877730000
		MF-W 9/3.5F MC SDR	800	1525830000	MF-W 9/4 MC SDR	100	1877710000

Technical drawing / application

MF MultiCard

MF-W 9/4.2F — 4.2 mm

Terminal marker

Technical data

Material	Polyamide 66
Fire class acc. to UL 94	V-2
Ambient temperature (operational)	-40 °C...100 °C
Application/manufacturer	WAGO, Legrand
Width	4.2 mm
Length	9 mm

Ordering data

MultiCard Blank		Type	Qty.	Order No.
White	❍	MF-W 9/4.2F MC NE WS	500	1011430000
MultiCard custom printing				
To customer specification		MF-W 9/4.2F MC SDR	100	1038750000

Technical drawing / application

MF MultiCard – markers for use with other makes of terminals

MF MultiCard

MF-W 9/5	5 mm	MF-W 9/5F	5 mm
Terminal marker		Terminal marker	

Technical data

Material	Polyamide 66	Polyamide 66
Fire class acc. to UL 94	V-2	V-2
Ambient temperature (operational)	-40 °C...100 °C	-40 °C...100 °C
Application/manufacturer	WAGO, Legrand	WAGO, Legrand
Width	5 mm	5 mm
Length	9 mm	9 mm

Ordering data

MultiCard Blank	Type	Qty.	Order No.	Type	Qty.	Order No.
Yellow	MF-W 9/5 MC NE GE	500	1027310000			
White	MF-W 9/5 MC NE WS	500	1816270000	MF-W 9/5F MC NE WS	500	1816280000
Grey				MF-W 9/5F MC NE GR	500	1045980000
MultiCard custom printing						
To customer specification	MF-W 9/5 MC SDR	100	1816340000	MF-W 9/5F MC SDR	100	1816350000

Technical drawing / application

MF MultiCard

MF-W 9/5.2F — 5.2 mm

Terminal marker

Technical data

Material	Polyamide 66
Fire class acc. to UL 94	V-2
Ambient temperature (operational)	-40 °C...100 °C
Application/manufacturer	WAGO, Legrand
Width	5.2 mm
Length	9 mm

Ordering data

MultiCard Blank		Type	Qty.	Order No.
White	❍	MF-W 9/5.2F MC NE WS	500	1011410000
MultiCard custom printing				
To customer specification		MF-W 9/5.2F MC SDR	100	1038760000

Technical drawing / application

MF MultiCard – markers for use with other makes of terminals

MF MultiCard

MF-W 9/6	6 mm
Terminal marker	

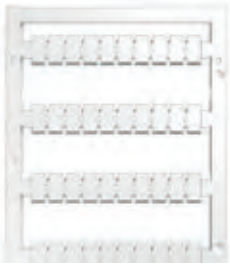

MF-W 9/6.2F	6.2 mm
Terminal marker	

Technical data

	MF-W 9/6	MF-W 9/6.2F
Material	Polyamide 66	Polyamide 66
Fire class acc. to UL 94	V-2	V-2
Ambient temperature (operational)	-40 °C...100 °C	-40 °C...100 °C
Application/manufacturer	WAGO, Legrand	WAGO, Legrand
Width	6 mm	6.2 mm
Length	9 mm	9 mm

Ordering data

MultiCard Blank						
White	❍	Type	Qty.	Order No.	Type	Qty.	Order No.
MultiCard custom printing							
To customer specification		MF-W 9/6 MC NE WS	500	1816290000	MF-W 9/6.2F MC NE WS	500	1011420000
		MF-W 9/6 MC SDR	500	1816360000	MF-W 9/6.2F MC SDR	100	1038770000

Technical drawing / application

MF MultiCard

MF-W 5/5 Mini — 5 mm

Terminal marker

Technical data

Material	Polyamide 66
Fire class acc. to UL 94	V-2
Ambient temperature (operational)	-40 °C...100 °C
Application/manufacturer	WAGO, Legrand, Entrelec
Width	5 mm
Length	5 mm

Ordering data

MultiCard Blank	Type	Qty.	Order No.
Blue	MF-W 5/5 MINI MC NE BL	500	1924270000
Yellow	MF-W 5/5 MINI MC NE GE	500	1924280000
Green	MF-W 5/5 MINI MC NE GN	500	1924290000
Red	MF-W 5/5 MINI MC NE RT	500	1924260000
White	MF-W 5/5 MINI MC NE WS	500	1816240000
MultiCard custom printing			
To customer specification	MF-W 5/5 MINI MC SDR	100	1816310000

Technical drawing / application

MF MultiCard – markers for use with other makes of terminals

MF MultiCard

MF-WO 5/5	5 mm
Terminal marker	

MF-WO 9/5	5 mm
Terminal marker	

Technical data

	MF-WO 5/5	MF-WO 9/5
Material	Polyamide 66	Polyamide 66
Fire class acc. to UL 94	V-2	V-2
Ambient temperature (operational)	-40 °C...100 °C	-40 °C...100 °C
Application/manufacturer	Woertz	Woertz
Width	5 mm	5 mm
Length	5 mm	9 mm

Ordering data

MultiCard Blank		Type	Qty.	Order No.	Type	Qty.	Order No.
White	❍	MF-WO 5/5 MC NE WS	400	1716800000	MF-WO 9/5 MC NE WS	400	1716840000
MultiCard custom printing							
To customer specification		MF-WO 5/5 MC SDR	80	1716810000	MF-WO 9/5 MC SDR	80	1716850000

Technical drawing / application

MF MultiCard

	MF-WO 12/5	5 mm	MF-WO 9/6	6 mm
	Terminal marker		Terminal marker	

Technical data

Material	Polyamide 66	Polyamide 66
Fire class acc. to UL 94	V-2	V-2
Ambient temperature (operational)	-40 °C...100 °C	-40 °C...100 °C
Application/manufacturer	Woertz	Woertz
Width	5 mm	6 mm
Length	12 mm	9 mm

Ordering data

MultiCard Blank					
White	❍	Type	Qty.	Order No.	Type	Qty.	Order No.
		MF-WO 12/5 MC NE WS	400	1692270000	MF-WO 9/6 MC NE WS	400	1716820000
MultiCard custom printing							
To customer specification		MF-WO 12/5 MC SDR	80	1692280000	MF-WO 9/6 MC SDR	80	1716830000

Technical drawing / application

MF MultiCard – markers for use with other makes of terminals

MF MultiCard

MF-WO 12/6 | **6 mm**

Terminal marker

Technical data

Material	Polyamide 66
Fire class acc. to UL 94	V-2
Ambient temperature (operational)	-40 °C...100 °C
Application/manufacturer	Woertz
Width	6 mm
Length	12 mm

Ordering data

MultiCard Blank		Type	Qty.	Order No.
White	❍	MF-WO 12/6 MC NE WS	400	**1692290000**
MultiCard custom printing				
To customer specification		MF-WO 12/6 MC SDR	80	**1692300000**

Technical drawing / application

MF MultiCard

MF-SI 8/5 — 5 mm

Terminal marker

MF-SI 10/5 — 5 mm

Terminal marker

Technical data

Material	Polyamide 66	Polyamide 66
Fire class acc. to UL 94	V-2	V-2
Ambient temperature (operational)	-40 °C...100 °C	-40 °C...100 °C
Application/manufacturer	Siemens	Siemens
Width	5 mm	5 mm
Length	8 mm	10 mm

Ordering data

MultiCard Blank					
White	❍	Type	Qty.	Order No.	Type	Qty.	Order No.
		MF-SI 8/5 MC NE WS	400	1889180000	MF-SI 10/5 MC NE WS	400	1889190000
MultiCard custom printing							
To customer specification		MF-SI 8/5 MC SDR	80	1886270000	MF-SI 10/5 MC SDR	80	1889170000

Technical drawing / application

MF MultiCard – markers for use with other makes of terminals

MF MultiCard

MF-SI 8/6	6 mm
Terminal marker	

MF-SI 10/6	6 mm
Terminal marker	

Technical data

Material	Polyamide 66	Polyamide 66
Fire class acc. to UL 94	V-2	V-2
Ambient temperature (operational)	-40 °C...100 °C	-40 °C...100 °C
Application/manufacturer	Siemens	Siemens
Width	6 mm	6 mm
Length	8 mm	10 mm

Ordering data

MultiCard Blank						
White	❍	Type	Qty.	Order No.	Type	Qty.	Order No.
		MF-SI 8/6 MC NE WS	320	1889240000	MF-SI 10/6 MC NE WS	320	1889260000
MultiCard custom printing							
To customer specification		MF-SI 8/6 MC SDR	64	1889230000	MF-SI 10/6 MC SDR	64	1889250000

Technical drawing / application

MF MultiCard

MF-SI 10/5-6.5 — 5 mm

Terminal marker

MF-SI 7/5-6.5 — 5 mm

Terminal marker

Technical data

Material	Polyamide 66	Polyamide 66
Fire class acc. to UL 94	V-2	V-2
Ambient temperature (operational)	-40 °C...100 °C	-40 °C...100 °C
Application/manufacturer	Siemens	Siemens
Width	5 mm	5 mm
Length	10 mm	7 mm

Ordering data

MultiCard Blank						
White	❍	Type	Qty.	Order No.	Type	Qty.	Order No.
		MF-SI 10/5-6.5 MC NE WS	320	1889800000	MF-SI 7/5-6.5 MC NE WS	320	1889780000
MultiCard custom printing							
To customer specification		MF-SI 10/5-6.5 MC SDR	64	1889790000	MF-SI 7/5-6.5 MC SDR	64	1889770000

Technical drawing / application

MF MultiCard – markers for use with other makes of terminals

MF MultiCard

MF-ABB 12/5	5 mm
Terminal marker	

MF-ABB 12/6	6 mm
Terminal marker	

Technical data

Material	Polyamide 66	Polyamide 66
Fire class acc. to UL 94	V-2	V-2
Ambient temperature (operational)	-40 °C...100 °C	-40 °C...100 °C
Application/manufacturer	ABB SNK series	ABB SNK series
Width	5 mm	6 mm
Length	12 mm	12 mm

Ordering data

MultiCard Blank						
White	❍	Type	Qty.	Order No.	Type	Qty.	Order No.
		MF-ABB 12/5 MC NE WS	400	2047320000	MF-ABB 12/6 MC NE WS	400	2047340000
MultiCard custom printing							
To customer specification		MF-ABB 12/5 MC SDR	80	2047460000	MF-ABB 12/6 MC SDR	80	2047510000

Technical drawing / application

MF MultiCard

MF-ABB 12/8 — 8 mm

Terminal marker

Technical data

Material	Polyamide 66
Fire class acc. to UL 94	V-2
Ambient temperature (operational)	-40 °C...100 °C
Application/manufacturer	ABB SNK series
Width	8 mm
Length	12 mm

Ordering data

MultiCard Blank		Type	Qty.	Order No.
White	❍	MF-ABB 12/8 MC NE WS	280	2047350000
MultiCard custom printing				
To customer specification		MF-ABB 12/8 MC SDR	56	2047520000

Technical drawing / application

Cross-reference table

Phoenix

	MF 5/3,5	MF 5/4	MF 5/5	MF 8/5	MF 10/5	MF 12/5	MF 5/6	MF 10/6	MF 10/8	MF 5/10	MF 10/10	MF 5/7,5	MF 4/5,2	MF 5/12
AKG 16...								X						
AKG 35...								X						
AKG 4				X	X	X								
DFK 4...								X						
DFK 5...								X						
DIK 1,5...							X	X						
DIKD 1,5...							X	X						
DLK.. 2,5...							X	X						
DOK 1,5...							X	X						
DT 6/2,5-DREH...											X			
DTI 2,5 ...			X	X	X									
DTI 4 ...							X	X						
DTI 6 ...									X					
DTME.. 6 ...									X					
DTN 2,5 ...			X	X	X									
DTN 4 ...							X	X						
DTN 6 ...									X					
EC-E...			X											
GE 10...											X			
GE 35...											X			
GTF 76/...											X			
HDFK 10									X					
HDFK 16											X			
HDFK 25											X			
HDFK 4								X						
HDFK 50/...														X
HDFK 95														X
HV M5/...											X			
HV M6/...											X			
HV M8/...											X			
HV M10/...											X			
HV M12/...														
IL...							X							
IB...							X							
MKB ...													X	
MBK 2,5/E...													X	
MBK 3...													X	
MBK 3/E-Z...			X	X	X	X								
MBK 5...													X	
MBK 5/E-...													X	
MBK 5/E-Z...							X	X						
MBK 6/E...									X					
MBKKB 2,5...			X	X	X	X								
MPT 1,5/S	x													
MPT 2,5			X											
MSB 2,5 ...			X											
MSDB 2,5 ...			X											
MSBV 2,5 ...			X											
MSDBV 2,5 ...			X											
MSLKG 2,5												X		
MSLKG 5												X		
MSLKG 6									X					
MT 1,5...		X												
MTK ...			X	X	X	X								
MTKD-...											X			
MTTB 1,5...		X												
MZB 1,5....			X											
MZDB 1,5....			X											
MZFK 1,5...			X											
MZFKK 1,5 ...			X											
MZFKKB 1,5			X											
OTTA 2,5									X					
OTTA 25										X	X			
OTTA 6...									X					
PCVK 4-7,62 ...							X	X						
PP-H 1,5/S...	X													
PP-H 2,5/...			X											
PP-H 4/...							X							
PPC 1,5/S...	X													
PT 1,5/S...	X													
PT 2,5			X		X									

	MF 5/3,5	MF 5/4	MF 5/5	MF 8/5	MF 10/5	MF 12/5	MF 5/6	MF 10/6	MF 10/8	MF 5/10	MF 10/10	MF 5/7,5	MF 4/5,2	MF 5/12
PT 4...							X	X						
PT 10...										X				
PTI 2,5			X		X									
PTI 4...							X	X						
PTIO...	X													
PTS 1,5/S...	X													
PTTB 1,5/S...	X													
PTTB 2,5			X		X									
PTTB 4...							X	X						
PTTBS 1,5/S	X													
PTTBS 2,5			X		X									
PTN 2,5			X		X									
PTN 4...							X	X						
PTS 2,5			X		X									
PTU 2,5			X		X									
PTU 4...							X	X						
MPT 2,5			X											
PTME(D) 4...							X	X						
PVB...								X						
QP 1,5...			X											
QTC 1,5 ...			X	X	X									
QTC 2,5 ...							X	X						
QTC 2,5-HE..I ...							X							
QTCS 1,5 ...			X	X	X									
QTCS 2,5 ...							X	X						
QTCU 1,5 ...			X	X	X									
QTCU 2,5 ...							X	X						
QTTCB 1,5 ...			X											
QTTCBS 1,5 ...			X											
RT 3...											X			
RT 5...											X			
RT 8...											X			
RTO 3...											X			
RTO 5...											X			
RTO 8...											X			
RV 8-TP ...								X						
RVS 10-TP...								X						
SC 2,5...			X											
SC 4...							X							
SGSK 6									X					
SP 2,5/...			X											
SP.. 2,5/...			X											
SP 4/...							X							
SLKK 5...							X	X						
SRDK 6									X					
SRTK 6									X					
SSL 2,5			X											
ST 1,5/S-QUATTRO	x													
ST 1,5...		X												
ST 2,5....			X	X										
ST 2,5-3...			X											
ST 2,5-PCB...			X											
ST 2,5-PE/../..			X											
ST 2,5-4...			X											
ST 4....							X							
ST 4-PE/...							X							
ST 4-HE..I...							X							
ST 4-FSI/C ...									X					
ST 4-PCB...							X							
ST 6 ...									X					
ST 10 ...										X				
ST 16 ...														X
ST 35 ...							X							
STI 10...										X				
STI 16...														X
STI 2,5...			X	X	X									
STI 2,5-PE/../..			X	X	X	X								
STI 2,5-L ...			X	X	X	X								
STI 4...							X	X						
STIO 2,5/3-...			X											
STIO-IN 2,5/3...			X											

Individual mounting is required if the terminal pitch is larger than the marker.

Phoenix

	MF 5/3,5	MF 5/4	MF 5/5	MF 8/5	MF 10/5	MF 12/5	MF 5/6	MF 10/6	MF 10/8	MF 5/10	MF 10/10	MF 5/7,5	MF 4/5,2	MF 5/12
STIO 2,5/4-...							X							
STIO-IN 2,5/4...							X							
STME .. 6 ...									X					
STN 10											X			
STN 16							X							
STN 2,5			X											
STN 35											X			
STN 4							X							
STS 2,5...			X	X	X	X								
STS 4...							X	X						
STS 6...									X					
STTB 1,5...		X												
STTB 2,5...			X											
STTB 4...							X							
STTBS 2,5 ...			X	X	X									
STTBS 4-...							X	X						
STU 2,5-TWIN ...			X	X										
STU 4-TWIN ...							X							
STU 10/ ...							X							
STU 35/ ...							X							
STTBU 4 ...							X							
TCP...			X											
TMC...								X						
TMCP-CONNECT-LR								X						
TMCP-SOCKET-M								X						
TRK 4 (Raster 7,5)												X		
TT-STTB-...								X						
UDK 3...			X	X	X	X								
UDK 4...							X	X						
UDK 4-MTK							X	X						
UDK 5-MTK							X	X						
UDMTK 5....							X	X						
UGSK 6									X					
UGSK/S									X					
UHK 4-FS...							X	X						
UHV 25 - UHV 240										X	X			
UIK 16...											X			X
UIK 35...											X			X
UISLKG 16...										X	X			
UISLKG 35...										X	X			
UK 10 N											X			
UK 10,3-... HESI...											X			
UK 10-DRHESI...								X						
UK 16 N											X			
UK 2,5 N			X	X	X	X								
UK 3 N			X	X	X	X								
UK 35											X			
UK 35 N...											X			
UK 4...							X	X						
UK 5 N							X	X						
UK 5-HESI									X					
UK 5-MTK...							X	X						
UK 6 N									X					
UK 6,3-HESI											X			
UK 6-FSI/C...									X					
UKB 4 ...								X						
UKH 150 ...											X			
UKH 240 ...											X			
UKH 50 ...											X			
UKH 95 ...											X			
UKK 3...			X	X	X	X								
UKK 4-FS...							X	X						
UKK 5...							X	X						
UKKB 3...			X	X	X	X								
UKKB 5...							X	X						
UKKB 10											X			
UKKB 10/2,5			X	X	X	X					X			
UKN 10 N...											X			
UKN 16 N...											X			
UKN 2,5...							X	X						
UKN 35...											X			

	MF 5/3,5	MF 5/4	MF 5/5	MF 8/5	MF 10/5	MF 12/5	MF 5/6	MF 10/6	MF 10/8	MF 5/10	MF 10/10	MF 5/7,5	MF 4/5,2	MF 5/12
UKN 5...							X	X						
UKN 6 N...									X					
UK-SI									X					
URDK 6									X					
URKN											X			
URKN/S									X					
URTK 6									X					
URTK/S									X					
URTK/S-BEN ...									X					
URTK/SP									X					
URTK/SS							X	X						
URTKD/SP									X					
UP 4/...							X							
UPBV 2,5/...			X											
UPBV 4/...							X							
UPCV3K ...							X	X						
USED 16											X			
USED 27											X			
USEN 14											X			
USEN 18											X			
USIG...											X			
USK 4-FS...							X	X						
USKLG 1,5 N		X												
USKLG 10 N...											X			
USKLG 16 N...											X			
USKLG 2,5 N...			X	X	X	X								
USKLG 3...			X	X	X	X								
USKLG 35											X			
USLKG 35 N											X			
USKLG 5...							X	X						
USKLG 50											X			
USKLG 6 N...									X					
USKLG 95											X			
UT 10 ...											X			
UT 16 ...											X			
UT 35 ...											X			
UT 2,5 ...				X	X	X								
UT 4 ...								X						
UT 4-HEDI ...							X	X						
UT 4-HESI ...							X	X						
UT 4-PE/...							X	X						
UTME .. 6 ...									X					
UTTB 2,5-...			X	X	X	X								
UTTB 4-...							X	X						
UT 6 ...									X					
UT 6-TMC M...											X			
UTI 16 ...											X			
UTI 35 ...											X			
UTN 2,5			X	X	X	X								
UTN 4							X	X						
UTN 6									X					
UTN 10											X			
UTN 16											X			
UTN 35											X			
UVKB 4-FS...							X	X						
VBSN 4								X						
VBST 4-FS...							X	X						
VKK 4-FS							X	X						
VIOK 1,5...							X	X						
W 80/...								X						
ZDIK 1,5...			X											
ZDMTK 2,5...							X							
ZFK 6-DREHSI...							X							
ZFKK 2,5-MT...			X											
ZGSK 4									X					
ZPV 1,5/2,5			X	X	X	X								
ZRTK 4									X					
ZRV 8							X	X						
ZVIOK 1,5...			X											

Individual mounting is required if the terminal pitch is larger than the marker.

WAGO

	MF-W 9/4	MF-W 5/5 mini	MF-W 9/5	MF-W 9/5 F	MF-W 9/6
Feed-through terminals					
264-701/704/706		X			
264-711/714/716		X			
264-721/724/726		X			
264-731/734/736		X			
264-120/125/220/225		X			
279-101/104	X				
279-604/621	X				
279-626/826	X				
279-681...686	X				
279-831...836	X				
279-901...906	X				
279-989...995	X				
280-101/104	X				
280-601/602		X	X	X	
280-603/633/634		X	X	X	
280-604/621/826/626		X	X	X	
280-641/651/654		X	X	X	
280-646/656/946		X	X	X	
280-653/671/672		X	X	X	
280-681/684/650		X	X	X	
280-830...835		X	X	X	
280-901...906		X	X	X	
280-989...995		X	X	X	
280-996...999		X	X	X	
280-691		X	X	X	
281-101/104					X
281-601/604					X
281-631/651					X
281-652...654					X
281-663/664/668					X
281-678/681/684					X
281-901/902/904					X
281-992..994/998/691					X
282-101/104					X
282-601/604					X
282-681/682/684					X
282-901/902/904					X
282-992/993/691					X
283-101/104					X
283-601/604					X
283-671/672/674					X
283-901/902/904					X
283-992/998/691					X
284-101/104					X
284-601/604					X
284-621/624					X
284-681/682/684					X
284-691/992/993					X
284-901/902/904					X
285-194/195					X
285-601/604/607					X
285-634/635		X			X
285-691					X
285-992/995					X
290-861/864/867		X	X	X	
780-601/602/604			X	X	
780-631/651/654			X	X	
780-992/993			X	X	
781-601/604					X
781-631/651					X
781-992/993					X
782-601/604					X
782-992					X
783-601/604					X
783-992					X
784-601/604					X
784-992					X
785-601/604/613					X
792-... all		X			
812-140			X	X	X
859-...all		X			
870-681/682/684		X		X	
870-831/832/834		X		X	
870-901/902/904		X		X	
870-911/912/914		X		X	
880-661/662/664		X	X	X	
880-681/682/684		X	X	X	
880-831/832/834		X	X	X	
880-901/902/904		X	X	X	
880-961/964/962		X	X	X	
Protective earth terminals					
264-727		X			
264-737		X			
279-687	X				
279-837	X				
279-907	X				
280-107		X	X	X	
280-607		X	X	X	
280-637		X	X	X	
280-677		X	X	X	
280-687		X	X	X	
280-837		X	X	X	
280-907		X	X	X	
281-107					X
281-607					X
281-637					X
281-657					X
281-687					X
281-907					X
282-107					X
282-607					X
282-687					X
282-907					X
283-607					X
283-609					X
283-677					X
283-907					X
284-107					X
284-607					X
284-687					X
284-907					X
285-197					X
285-607		X			X
285-637		X			X
780-607			X	X	
780-637			X	X	
780-637					X
781-607					X
782-607					X
783-607					X
784-607					X
785-607					
870-687		X		X	
870-837		X		X	
870-907		X		X	
870-917		X		X	
880-687		X	X	X	
880-837		X	X	X	
880-907		X	X	X	
Fuse terminals					
282-698					X
282-696					X
281-611/612/616/622					X
281-624/672					X
281-613/623					X
282-122					X
282-120					X
282-126					X
282-124					X
282-128					X
Two-tier terminals					
279-501/512/513	X				
279-504	X				
279-507	X				
279-508	X				
279-509	X				
279-517/527	X				
280-513		X	X	X	
280-517		X	X	X	
280-519/529		X	X	X	
280-520/530		X	X	X	
280-521/525		X	X	X	
280-522/526		X	X	X	
280-523/533		X	X	X	
280-524/534		X	X	X	
280-527/537		X	X	X	
280-531		X	X	X	
280-532		X	X	X	
280-543		X	X	X	
281-619/629					X
281-620/630					X
870-101...104		X	X	X	
870-107		X	X	X	
870-108		X	X	X	
870-117/127		X	X	X	
870-501...504		X	X	X	
870-507		X	X	X	
870-508/509		X	X	X	
870-517/527		X	X	X	
870-531...534		X	X	X	
870-535/536		X	X	X	
870-537		X	X	X	
870-538/538		X	X	X	
870-826		X	X	X	
Three- and four-tier terminals					
280-549/551		X	X	X	
280-550		X	X	X	
280-552		X	X	X	
280-547/557/597		X	X	X	
280-548/558		X	X	X	
281-531/532					X
870-551/553		X		X	
870-556		X		X	
870-558/559/567/577		X		X	
870-557		X		X	
281-530					X
Routing and potential terminals					
727-... all					X
280-675			X		
Honeycomb elements					
726-... all			X		
Single terminals					
264-130/131		X			
264-230/231		X			
264-180/280		X			
Pluggable relays and bases					
286-... all	X				
786-... all	X				
788-... all			X		X
789-... all		X			
Multi-tier terminals					
775-641			X	X	
775-642/649			X	X	
775-646			X	X	
775-645			X	X	

The markers must be mounted individually when the terminal pitch is larger than 6.2 mm.

WAGO

	MF-W 9/4	MF-W 5/5 mini	MF-W 9/5	MF-W 9/5 F	MF-W 9/6
777-641					X
777-642					X
777-646					X
777-645					X
777-648					X
777-647					X
777-649					X
777-651					X
777-650					X
777-652					X
776-641					X
776-645/646					X
776-649/642					X
776-650/651					X
Disconnect test terminals					
280-612/614			X	X	
280-622/623/627			X	X	
280-649/676/685/695			X	X	
280-683			X	X	
280-805/836/829/839			X	X	
280-868/870/876/879		X	X		
280-869/871/880		X	X		
280-874/881/883/885		X	X		
280-875/882/884		X	X		
280-912...914			X		
281-659/660					X
281-666					X
281-683					X
281-912					X
282-131					X
282-133					X
282-135					X
282-138...141					X
282-694/699					X
282-811/821		X			X
282-860					X
282-865					X
282-866/695/697					X
282-870					X
781-613/623					X
781-643/653					X
782-613/623					X

	MF-W 9/4	MF-W 5/5 mini	MF-W 9/5	MF-W 9/5 F	MF-W 9/6
783-613/623					X
784-613/623					X
Initiator terminals					
270-560/564		X			
270-570/574		X			
270-572/577		X			
270-585/586		X			
280-553/560		X	X	X	
280-559		X	X	X	
280-561		X	X	X	
280-563		X	X	X	
280-564		X	X	X	
280-567		X	X	X	
280-570		X	X	X	
280-571		X	X	X	
280-573		X	X	X	
280-574		X	X	X	
280-577		X	X	X	
280-580		X	X	X	
280-582		X	X	X	
280-583		X	X	X	
280-584		X	X	X	
280-588		X	X	X	
Actuator terminals					
280-515		X	X	X	
280-554		X	X	X	
280-555		X	X	X	
280-556		X	X	X	
280-562		X	X	X	
280-565		X	X	X	
280-566		X	X	X	
280-568		X	X	X	
280-572		X	X	X	
280-575		X	X	X	
280-576		X	X	X	
280-578		X	X	X	
280-583		X	X	X	
280-585		X	X	X	
280-586		X	X	X	
280-592		X	X	X	
280-593		X	X	X	

	MF-W 9/4	MF-W 5/5 mini	MF-W 9/5	MF-W 9/5 F	MF-W 9/6
Diode and LED terminals					
279-620	X				
279-623	X				
279-624	X				
279-673	X				
279-674	X				
279-809	X				
279-815	X				
279-915	X				
280-613			X	X	
280-615			X	X	
280-623			X	X	
280-624			X	X	
280-655			X	X	
280-658			X	X	
280-673			X	X	
280-809			X	X	
280-815			X	X	
280-915			X	X	
280-940			X	X	
280-941			X	X	
280-942			X	X	
280-943			X	X	
281-603					X
281-633					X
281-634					X
281-635					X
281-636					X
281-665					X
281-673					X
281-915					X
870-540		X	X	X	
870-541		X	X	X	
870-542		X	X	X	
870-543		X	X	X	
870-590		X	X	X	
870-593		X	X	X	
870-596		X	X	X	
X-Com system					
769-... all		X			

WAGO I/O modules TOPLON

	MF-W 5/5 mini	MF 5/10	ESG 8/11
750-... all	X	X	X

WAGO TOPJOB S

	MF-W 9/4,2 F	MF-W 9/5,2 F	MF-W 9/6,2 F
2001-12..	X		
2001-13..	X		
2001-14..	X		
2002-12..		X	
2002-13..		X	
2002-14..		X	
2002-16..		X	
2002-18..		X	
2002-22..		X	
2002-29..		X	
2002-32..		X	
2002-63..		X	
2002-64..		X	
2002-71..		X	
2003-76..		X	
2004-12..			X
2004-13..			X
2004-14..			X
2005-76..			X
2006-12..			X
2006-13..			X

WAGO TOPJOB S

	MF-W 9/4,2 F	MF-W 9/5,2 F	MF-W 9/6,2 F
2006-71..			X
2010-12..			X
2010-13..			X
2016-12..			X
2016-13..			X
2016-71..			X

The markers must be mounted individually when the terminal pitch is larger than 6.2 mm.

Cross-reference table

ABB-Stotz/Entrelec

	MF-W 9/4	MF-W 9/5	MF-W 9/5 F	MF-W 9/6	MF-W 9/6.2 F	MF-W 5/5 mini	MF 10/5	MF 10/6	MF 10/8	MF 10/10	MF-ABB 12/5	MF-ABB 12/6	MF-ABB 12/8
131 ET TM4...						X							
165 LT TM5...						X							
41 H LT...						X							
62 H...				X									
BADH				X									
BADL				X	X			X					
BADRL				X	X	X		X					
BAEH				X									
BAM...				X	X			X					
BAMH				X	X			X					
D 1,5/4...	X												
D 1,5/6...				X									
D 1,5/6...ADO...				X									
D 1,5/8...ADO				X									
D 1/5...ADO		X											
D 10/10...						X							
D 150/31...				X	X								
D 16/12...						X							
D 2,5/5.P...		X	X										
D 2,5/5...						X							
D 2,5/5...ADO		X											
D 2,5/6...						X							
D 2,5/8...						X							
D 2,5/8...ADO...				X									
D 240/36...				X	X								
D 35/16...						X							
D 4/6.P...				X	X			X					
D 4/6...						X							
D 4/6...ADO		X											
D 4/6...ADO				X									
D 4/8...				X									
D 4/8...ADO...				X									
D 6/10...				X	X			X	X	X			
D 6/8.P				X	X				X				
D 6/8.ST...				X	X				X				
D 6/8...						X							
D 6/8...ADO...				X									
D 70/22...				X	X								
DB 1,5/6...						X							
DB 1/5...						X							
DB 2,5/5...						X							
DB 2,5/8...						X							
DB 4/6...						X							
DB 4/8...						X							
DF 6				X				X					
DH 1,5/6...						X							
DH 1/5...						X							
DH 2,5/5...						X							
DH 2,5/8...						X							
DH 4/6...						X							
DH 4/8...						X							
DL 10/17,5...						X							
DR 1,5/4...	X												
DR 1,5/5...						X							
DR 1,5/6...						X							
DR 1/5...						X							
DR 2,5/10...						X							
DR 2,5/5...						X							
DR 2,5/8...						X							
DR 4/6...						X							

Individual mounting is required if the terminal pitch is larger than the marker.

	MF-W 9/4	MF-W 9/5	MF-W 9/5 F	MF-W 9/6	MF-W 9/6.2 F	MF-W 5/5 mini	MF 10/5	MF 10/6	MF 10/8	MF 10/10	MF-ABB 12/5	MF-ABB 12/6	MF-ABB 12/8
DR 4/8...				X	X				X				
DR 4/8...ADO...						X							
DS 1,5/6...						X							
DS 1/5...						X							
DS 2,5/5...						X							
DS 2,5/8...						X							
DS 4/6...						X							
DS 4/8...						X							
HD 10/12...		X											
HD 120/30...		X											
HD 16/14...		X											
HD 185/36...		X											
HD 2,5/6...				X									
HD 35/16...		X											
HD 4/9...		X											
HD 6/14...				X									
HD 6/8...				X									
HD 6/9...				X									
HD 70/22...		X											
M 1,5/6...				X				X					
M 10/10...				X	X					X			
M 10/16...				X	X			X	X	X			
M 16/12.PE.N				X									
M 16/12...				X	X			X	X	X			
M 2,5/6,5...						X							
M 2,5/6...						X							
M 35/16...				X	X			X	X	X			
M 4/6...				X				X					
M 4/6...AP...				X									
M 4/7...				X	X			X					
M 4/8...				X	X				X				
M 6/12...				X									
M 6/13...				X									
M 6/8...				X	X				X				
M 70/22...				X	X			X	X	X			
M 95/26...				X	X			X	X	X			
MA 2,5/5...		X	X				X						
MB 10/10...				X	X					X			
MB 10/12 SF....				X									
MB 10/22...		X											
MB 10/24...		X						X	X	X			
MB 25/30...				X	X			X	X	X			
MB 4/6...				X				X					
MB 6/8...				X	X				X				
MB 70/10...				X	X					X			
ML 10/13...				X	X					X			
MS 4/6...				X	X			X					
MS 6/8...				X	X				X				
MTC 6				X				X					
MU 10/13...				X	X					X			
MU 10/14,5...				X	X					X			
T 1,5/6...				X		X							
T 2,5/5...		X											
T 2,5/6...				X									
T 4/6...				X									
SNK Series											X	X	X
ZS4...											X		
ZS6...												X	
ZS8...													X

Wieland

	MF 8/5	MF 10/5	MF 12/5	MF 10/6
9700 A/5...	X	X	X	
9700 A/6...				X
9700 A/8...				X
9700 A/10...				X
9700 A/12...				X
9700 A/16...				X
9700 B...				X
9701 A/6...A/16				X
9708/2 ...				X
9760 U...				X
9785 U...				X
9786 U...				X
AKB...	X	X	X	
AKT...	X	X	X	
flare Move ... (6.2 mm)				X
Terminal adapter revos Basic	X	X	X	
Terminal adapter revos HD	X	X	X	
Terminal adapter revos Power	X	X	X	
RV2../...	X	X	X	
UET..	X	X	X	
WEB...	X	X	X	
WEF 1...				X
WEG...	X	X	X	
WK 2,5...	X	X	X	
WK 2,5-4 KI...	X	X	X	
WK 2,5-4 KOI...	X	X	X	
WK 2,5-3 D...	X	X	X	
WK 2,5 U/D...	X	X	X	
WK 4...				X
WK 4 D...				X
WK 4 E...				X
WK 4/SI-D...				X
WK 4 TK...				X
WK 4 THSI ...				X
WK 6...				X
WK 10/SI...				X
WKC 1 ...	X	X		
WKC 2,5 ...				X
WKC 1 TKG...	X	X		
WKC 2,5 TKG...				X
WKN 10...				X
WKN 16...				X
WKN 2,5 E...	X	X	X	
WKN 35...				X
WKN 4 ...				X
WKN 70...				X
WK/3-6...				X
WK/4-8...				X
WKB 2,5...	X	X	X	
WKF 1,5 E...	X	X	X	
WKF 1,5 KOI...	X	X	X	
WKF 10...				X
WKF 16...				X
WKF 35...				X
WKF 2,5...	X	X	X	
WKF 2,5 D...	X	X	X	
WKF 2,5/M...	X	X	X	
WKF 4...				X
WKF 4 TK...				X
WKF 6...				X
WKFN 2,5...	X	X	X	
WKFN 2,5 E...	X	X	X	
WKFN 4...				X
WKFN 4 E...				X
WKI 10...				X
WKI 16...				X
WKI 35...				X
WKI 4...				X
WKIF 2,5 ...	X	X	X	
WKM 2,5...	X	X	X	
WKMF 2,5../1,5	X	X	X	
WKM 4...				X

Individual mounting is required if the terminal pitch is larger than the marker.

Cabur

	MF 10/5 Cabur	MF 12/5 Cabur
AFO.2...	X	X
CAM...	X	X
CBC.2... - CBC.35...	X	X
CBD.2... - CBD.70...	X	X
CBE.2...	X	
CBR.2...	X	X
CNT.16...	X	X
CNT.35...	X	X
CNT.6...	X	X
CVF.4...	X	X
DAS.4...	X	X
DBC.2...	X	
DSFA.4	X	
DSS.4...	X	
FDP.2...	X	X
FFS.4...	X	X
FPC.10...	X	X
FPL.10...	X	X
FVS.4...	X	X
MAC.6...	X	X
MPFA.4...	X	
MPS.2...	X	X
MPS.4...	X	X
NCS...	X	X
NCV...	X	X
PDF.2...	X	X
RFI.2...	X	
RN.2...	X	
RP.4...	X	
SCB.4...	X	X
SCB.6...	X	X
SFO.4...	X	X
SFR.4...	X	X
SFR.6...	X	X
TC/PO...	X	X
TDE.2...	X	X
TE.10...	X	X
TE.16...	X	X
TE.50...	X	X
TE.6...	X	X
TEC.10...	X	X
TEC.16...	X	X
TEC.35...	X	X
TEC.6...	X	X
TEC.70...	X	X
TED.4...	X	X
TEO.2...	X	X
TEO.4...	X	X
TLD.2...	X	X
TLE.2	X	X
TLS.2...	X	X
TR.2...	X	
TR.4...	X	X
VPC.2...	X	X

Cross-reference table

Siemens

	MF-SI 8/5	MF-SI 10/5	MF-SI 8/6	MF-SI 10/6	MF-SI 7/5-6.5	MF-SI 10/5-6.5	MF 5/4	MF 5/5	MF 8/5	MF 10/5	MF 12/5	MF 5/6	MF 10/6	MF 10/8	MF 10/10
8WA1 011-0DG...			X	X											
8WA1 011-1BF...	X	X													
8WA1 011-1BG...			X	X											
8WA1 011-1BH...			X	X											
8WA1 011-1BK...			X	X											
8WA1 011-1BM...			X	X											
8WA1 011-1BP...			X	X											
8WA1 011-1DF...	X	X													
8WA1 011-1DG...			X	X											
8WA1 011-1DH...			X	X											
8WA1 011-1EE...			X	X											
8WA1 011-1EF...	X	X													
8WA1 011-1MH...			X	X											
8WA1 011-1NF...	X	X													
8WA1 011-1NG...			X	X											
8WA1 011-1NH...			X	X											
8WA1 011-1PF...	X	X													
8WA1 011-1PG...			X	X											
8WA1 011-1PH...			X	X											
8WA1 011-1PK...			X	X											
8WA1 011-1PM...			X	X											
8WA1 011-1SF...			X	X											
8WA1 011-2BG11					X	X									
8WA1 011-2DG11					X	X									
8WA1 011-3DF...	X	X													
8WA1 011-3DG...			X	X											
8WA1 011-3DH...			X	X											
8WA1 011-3JF...	X	X													
8WA1 011-6BG11					X	X									
8WA1 011-6DG11					X	X									
8WA1 011-6EG...					X	X									
8WA1 204			X	X											
8WA1 205			X	X											
8WA1 206			X	X											
8WA1 221	X	X													
8WA1 232			X	X											
8WA1 304			X	X											
8WA1 305			X	X											
8WA1 501	X	X													
8WA1 604			X	X											
8WA2 011-...NK23			X	X											
8WA2 011-1BF....	X	X													
8WA2 011-1BG...			X	X											
8WA2 011-1BH...			X	X											
8WA2 011-1BJ...			X	X											
8WA2 011-1BK...			X	X											
8WA2 011-1DF...	X	X													
8WA2 011-1DG...			X	X											
8WA2 011-1DH...			X	X											
8WA2 011-1DJ...			X	X											
8WA2 011-1DK...			X	X											
8WA2 011-1EF20	X	X													
8WA2 011-1LF20	X	X													
8WA2 011-1NG23			X	X											
8WA2 011-1NH23			X	X											
8WA2 011-1PF...	X	X													
8WA2 011-1PG...			X	X											
8WA2 011-1PH...			X	X											
8WA2 011-1PJ...			X	X											
8WA2 011-1PK...			X	X											
8WA2 011-1SG...			X	X											
8WA2 011-2BG...			X	X											
8WA2 011-2DG...			X	X											
8WA2 011-3JG...			X	X											
8WA2 011-3JH23			X	X											
8WA2 011-3KE	X	X													
8WA2 011-6EG...			X	X											
8WA9 200			X	X											
8WH1 000-0AN...					X	X									
8WH1 000-0AQ...					X	X									
8WH1 000-0AS...					X	X									
8WH1 000-0AU...					X	X									
8WH1 000-0CN...					X	X									
8WH1 000-0CQ...					X	X									
8WH1 001-0...K...															X
8WH1 001-0...M...															X
8WH1 001-0BJ...															X
8WH1 001-0BJ...															X

Individual mounting is required if the terminal pitch is larger than the marker.

Siemens

	MF-SI 8/5	MF-SI 10/5	MF-SI 8/6	MF-SI 10/6	MF-SI 7/5-6.5	MF-SI 10/5-6.5	MF 5/4	MF 5/5	MF 8/5	MF 10/5	MF 12/5	MF 5/6	MF 10/6	MF 10/8	MF 10/10
8WH1 001-0BJ...															X
8WH1 060-0A...00					X	X									
8WH1 070-0A...					X	X									
8WH2 ...-6AF...								X	X	X					
8WH2 ...-6AG...												X	X		
8WH2 ...-6CF...								X	X	X					
8WH2 ...-6CG...												X	X		
8WH2 00...-0AE...							X								
8WH2 00...-0AF...								X	X	X					
8WH2 00...-0AG...												X	X		
8WH2 00...-0CE...							X								
8WH2 00...-0CF...								X	X	X					
8WH2 00...-0CG...												X	X		
8WH2 00...-0AH...														X	
8WH2 00...-0AJ...														X	
8WH2 00...-0AK...														X	
8WH2 00...-0AM...														X	
8WH2 00...-0CH...														X	
8WH2 000-1AG...														X	
8WH2 000-1BG...														X	
8WH2 000-1GG...												X	X		
8WH2 000-1HG...														X	
8WH2 000-1JG...												X	X		
8WH2 000-1MG...												X	X		
8WH2 000-1NG...														X	
8WH2 000-1RG...														X	
8WH2 003-5...F...								X	X						
8WH2 02...-0AE...							X								
8WH2 02...-0AF...								X	X						
8WH2 02...-0AG...												X	X		
8WH2 02...-0CE...							X								
8WH2 02...-0CF...								X	X						
8WH2 02...-0CG...												X	X		
8WH2 02...-4...F...								X	X						
8WH2 020-5...F...								X	X						
8WH2 03...-0...F...								X	X						
8WH2 04...-0...F...								X	X						
8WH2 040-4L...								X	X						
8WH2 103-...BF...								X	X	X					
8WH2 103-...BG...												X	X		
8WH2 50...-0...F...								X	X						
8WH2 50...-0...G...												X	X		
8WH2 50...-0...H...														X	
8WH2 50...-6...F...								X	X						
8WH2 520-0...F...								X	X						
8WH2 520-0...G...												X	X		
8WH3 00...-0...E...								X	X	X					
8WH3 00...-0...F...												X	X		
8WH3 000-6AE...								X	X	X					
8WH3 000-6AF...												X	X		
8WH3 000-6CF...												X	X		
8WH3 020-...E...								X							
8WH3 1...-2...E...								X	X	X					
8WH3 1...-2...F...												X	X		
8WH3 1...-3...E...								X	X	X					
8WH3 1...-3...F...												X	X		
8WH4 00...-0...F...								X	X	X					
8WH4 00...-0...G...												X	X		
8WH4 00...-0...H...														X	
8WH4 001-...F...									X	X					
8WH5 00...-0...F...								X	X	X					
8WH5 10...-...F...								X	X	X					
8WH5 100-...KG...												X	X		
8WH5 103-6...F...								X	X	X					
8WH5 12...-...MF...								X							
8WH9 040-1AB...								X							
8WH9 040-1BB...								X							
8WH9 040-1CB...								X							
8WH9 040-1DB...								X							
8WH9 040-1EB...								X							
8WH9 040-1FB...								X							
8WH9 050-0AB...															
8WH9 050-0LB...								X							
8WH9 050-1KB...												X			
8WH9 050-1LB...												X			
8WH9 050-1MB...												X			
8WH9 150-0CA00					X	X									

Individual mounting is required if the terminal pitch is larger than the marker.

Beckhoff

	MF-W 5/5 mini	ESG 8/11	MF 5/10
I/O modules	X	X	X

Adels

	MF 5/7.5
RKV Transformer terminal	X

Cross-reference table

Allen-Bradley

	MF-WO 5/5	MF-WO 9/5	MF-WO 12/5	MF-WO 9/6	MF-WO 12/6	DEK 5/3,5	DEK 5/5	DEK 5/6	DEK 5/8	WS 12/3,5	WS 8/5	WS 10/5	WS 10/5 m.	WS 12/5	WS 15/5	WS 10/6	WS 10/6 m.	WS 12/6	WS 12/6,5	Ws 12/6,5	ZS 10/5	ZS 12/6	ZS 15/5
1492-J10...							X												X				
1492-J16...							X												X				
1492-J2Q...							X							X									
1492-J3...							X							X									
1492-J35...							X												X				
1492-J3F...							X							X									
1492-J3P...							X							X									
1492-J3PTP...							X							X									
1492-J3TW...							X							X									
1492-J4...								X										X					
1492-J4M...								X										X					
1492-J5Q...							X												X				
1492-J6...									X										X				
1492-J7Q...							X												X				
1492-JC3...							X							X									
1492-JD3...							X				X												
1492-JD3C...							X				X												
1492-JD3DF...							X				X												
1492-JD3DR...							X				X												
1492-JD3F...							X				X												
1492-JD3P...							X						X										
1492-JD3PSS...							X						X										
1492-JD3PSSTP							X						X										
1492-JD3PTP...							X						X										
1492-JD3RB...							X				X												
1492-JD3RC001							X				X												
1492-JD3SS...							X				X												
1492-JDC3...							X							X									
1492-JDG3...							X				X												
1492-JDG3C...							X				X												
1492-JDG3P...							X						X										
1492-JDG3PSS...							X						X										
1492-JDG3PSSTP							X						X										
1492-JDG3PTP...							X						X										
1492-JG10...									X										X				
1492-JG16...									X										X				
1492-JG2Q...							X							X									
1492-JG3...							X							X									
1492-JG35...									X										X				
1492-JG3TW...							X							X									
1492-JG4...								X										X					
1492-JG5Q...									X										X				
1492-JG6...									X										X				
1492-JG7Q...									X										X				
1492-JKD3...							X							X									
1492-JKD3TP...							X							X									
1492-JP0...								X										X					
1492-JTC3...							X							X									
1492-K2...													X										
1492-K3...																	X						
1492-KG2...													X										
1492-KG3...																	X						
1492-KW2...													X										
1492-KW3...																	X						
1492-L10...									X									X					X
1492-L16...									X										X				X
1492-L16D...									X										X				X
1492-L2...						X				X													
1492-L2Q...						X				X													
1492-L2T...						X				X													
1492-L3...							X					X									X		
1492-L35...									X										X				X
1492-L3P...							X					X											
1492-L3Q...							X					X									X		
1492-L3QS...							X					X											
1492-L3T...							X					X									X		
1492-L4...								X								X						X	
1492-L4Q...								X								X						X	
1492-L4T...								X								X						X	
1492-L6...									X									X				X	
1492-L6T...									X									X				X	
1492-LC3...							X					X											
1492-LD2...						X				x													
1492-LD2C...						X				X													
1492-LD3...							X					X											
1492-LD3C...							X					X											
1492-LD4...								X								X							
1492-LD4C...								X								X							

Individual mounting is required if the terminal pitch is larger than the marker.

Allen-Bradley

	MF-WO 5/5	MF-WO 9/5	MF-WO 12/5	MF-WO 9/6	MF-WO 12/6	DEK 5/3,5	DEK 5/5	DEK 5/6	DEK 5/8	WS 12/3,5	WS 8/5	WS 10/5	WS 10/5 m.	WS 12/5	WS 15/5	WS 10/6	WS 10/6 m.	WS 12/6	WS 12/6,5	Ws 12/6,5	ZS 10/5	ZS 12/6	ZS 15/5
1492-LD4DF...								X								X							
1492-LD4DR...								X								X							
1492-LD4RB...								X								X							
1492-LD4SS...								X								X							
1492-LDAG3...							X					X											
1492-LDC3...							X					X											
1492-LDG2...						X				X													
1492-LDG3...							X					X											
1492-LDG3P...							X					X											
1492-LDG4...								X								X							
1492-LG10...									X									X					X
1492-LG16...									X										X				X
1492-LG2...						X				X													
1492-LG3...							X					X									X		X
1492-LG35...									X										X				X
1492-LG4...								X								X						X	
1492-LG6...									X									X				X	
1492-LKD3...							X					X											
1492-LM3...							X					X									X		
1492-LM3Q...							X					X									X		
1492-LMG3...							X					X									X		
1492-LMJ3...							X						X								X		
1492-LMJG3...							X						X								X		
1492-LMP3...							X					X									X		
1492-LMP3Q...							X					X									X		
1492-LS...							X																
1492-LTF3...							X						X										
1492-W16S...					X																		
1492-W3...		X																					
1492-W4...					X																		
1492-W4TW...				X																			
1492-W6...					X																		
1492-WFB4		X		X	X																		
1492-WG10S...					X																		
1492-WG16S...					X																		
1492-WG4...					X																		
1492-WG6...					X																		
1492-WM3...	X																						
1492-WM4...				X																			
1492-WMD...	X																						
1492-WMG...				X																			
1492-WR3...		X																					
1492-WTF3...		X																					
1492-WTS3...		X																					

Telemecanique

	MF 8/5	MF 10/5	MF 12/5	MF 10/6
AB1 AA135U...	X	X	X	
AB1 AA235U...				X
AB1 AATP135U...	X	X	X	
AB1 AATP235U...				X
AB1 AASC...				X
AB1 AASF...				X
AB1 AAET135UGR	X	X	X	
AB1 AAET235...				X
AB1 RR235U...	X	X	X	
AB1 RR435U...				X
AB1 RR635U2				X
AB1 RR1035U2				X
AB1 RR1635U2				X
AB1 RRTP235U...	X	X	X	
AB1 RRTP435U...				X
AB1 RRTP635U2				X
AB1 RRTP1035U2				X
AB1 RRTP1635U2				X
AB1 RRSC435UGR				X
AB1 RRSF435U				X
AB1 RRET...	X	X	X	
AB1 VV235U	X	X	X	

	MF 8/5	MF 10/5	MF 12/5	MF 10/6
AB1 VV435U				X
AB1 VV635U				X
AB1 VVN...				X
AB1 TP...				X
AB1 SC435U				X
AB1 FUSE435U				X
AB1 SF435U				X
AB1 D11435U				X
AB1 F...				X
AB1 E...				X
AB1 D...				X
AB1 TR...				X
AB1 NEN...				X
AB1 BB...				X
AB1 BC...				X
AB1 VV215	X	X	X	
AB1 VV415				X
AB1 TP215				X
AB1 BV10235U				X
AB1 DV10235U				X
AB1 BCP20235U				X

The markers must be mounted individually when the terminal pitch is larger than 6 mm.

Cross-reference table

Woertz

	MF-WO 5/5	MF-WO 9/5	MF-WO 12/5	MF-WO 9/6	MF-WO 12/6
2711...	X				
2759...	X				
2760...	X				
3410...					X
3424...					X
3426...					X
3427...					X
3428...					X
3429...					X
3430...				X	
3436/4...					X
3436...					X
3436/10...					X
3437...					X
3438...					X
3440...					X
3450...					X
3452...					X
3452/10...					X
3452/16...					X
3472...					X
3473...					X
3477...					X
30003...					X
30005...					X
30008...					X
30009...					X
30041...					X
30123...					X
30124...					X
30125...					X
30127...					X
30128...					X
30130...					X
30137...					X
30138...					X
30143...					X
30146...					X
30150...		X			
30168...					X
30172...					X
30176...					X
30191...					X
30195...					X
30197...					X
30200...					X
30228...					X
30290...					X
30291...					X
30400...	X				
30403...	X				
30430...				X	
30431...				X	
30432...				X	
30544/4...					X
30544/6...					X
30544/10...					X
30544/16...					X
30550...					X
30800...					X
30810...		X			
30840...					X
30841...					X
30842...					X
30843...					X
30844...					X
30860...		X			
30870...		X			
30880...		X			
30890...				X	

	MF-WO 5/5	MF-WO 9/5	MF-WO 12/5	MF-WO 9/6	MF-WO 12/6
30891...				X	
30902...				X	
30903...		X			
30904...				X	
30930...				X	
30950...				X	
30951...				X	
30952...				X	
30973...		X			
45124...	X				
45136...	X				
45140...	X				
45148...	X				
45156...	X				
45163...	X				
45165...	X				
45170...	X				
45179...	X				
45200...	X				
45217...	X				
45218...	X				
45219...	X				
45220...	X				
45235...	X				
45305T...	X				
45306T...	X				
45307T...	X				
45308T...	X				
45309T...	X				
45310T...	X				
45311T...	X				
45312T...	X				
45313T...	X				
45314T...	X				
45315T...	X				
45316T...	X				
45323T...	X				
45329T...	X				
45372T...	X				
45373T...	X				
45374T...	X				
45375T...	X				
45376T...	X				
45377T...	X				
45378T...	X				
45385T...	X				
45387T...	X				
45388T...	X				
45389T...	X				
45393T...	X				
45394T...	X				
45441T...	X				
45442T...	X				
45443T...	X				
45444T...	X				
45445T...	X				

Legrand

	MF 8/5	MF 10/5	MF 10/6
390 60	X	X	
390 61			X
390 62			X
390 64			X
390 66			X
390 68			X
390 70			X
390 77	X	X	
390 78			X
390 76			X
390 80			X
390 81			X
390 84			X
390 85			X
390 86			X
393 00	X	X	
393 01			X
393 02			X
393 03			X
393 04			X
393 05			X
393 07			X
393 60	X	X	
393 61			X
393 62			X
393 64			X
393 66			X
393 68			X
393 70			X
393 71	X	X	
393 72			X
393 73			X
393 74			X
393 76			X
393 78			X
393 81			X
393 82			X
394 00			X
394 02			X
396 01	X	X	
396 02	X	X	
396 03	X	X	
396 04			X
396 11	X	X	
396 12	X	X	
396 13	X	X	
396 14			X
396 21	X	X	
396 24			X
396 23	X	X	

Festo

	MFF 10/6	MFF 9/4	ESG 10/17	ESG 9/20	ESG-M 8/20	ESG-M 9/17
CPE	X					
MZBH	X					
MOZBH	X					
MEBH	X					
MOEBH	X					
JMN2H, MN2H						X
JMN2H, MN1H				X		
JMT2H/MT2H-...-4,0				X		
JMT2H, MT2H-...-7,0			X			
MVH, MOVH, MDH, MODH				X		
MHA1, MHP1		X				
CPV10/14	X					
CPV18				X		
CP-E16	X					
CP-A08	X					
MV-BZ Typ 02				X		
KMYZ	X					
Pneumatic elements and valve clusters					X	

Murr

	ESG-M 9/17	ESG-M 8/20	ESG 9/20	MF 10/5	MF 12/5
MASI	X				
MVP	X				
Cube67		X			
M8 distributor				X	
MVK		X			
Optocoupler					X
Miro-Series					X

Cross-reference table

Markers

	MF 5/3,5	MF 5/4	MF 5/5	MF 5/6	MF 5/10	MF 5/12	MF 8/5	MF 10/5	MF 12/5	MF 4/5,2	MF 10/6	MF 5/7,5	MF 10/8	MF 10/10	MF 5/7,5	MF-W 9/4	MF-W 9/4.2 F	MF-W 5/5 mini	MF-W 9/5	MF-W 9/5 F	MF-W 9/5.2 F	MF-W 9/6	MF-W 9/6.2 F	MF-SI 8/5	MF-SI 10/5	MF-SI 8/6	MF-SI 10/6	MF-SI 7/5-6,5	MF-SI 10/5-6,5	MF-WO 5/5	MF-WO 9/5	MF-WO 12/5	MF-WO 9/6	MF-WO 12/6	MF 10/5 Cabur	MF 12/5 Cabur	MF-ABB 12/5	MF-ABB 12/6	MF-ABB 12/8	ESG 5/10	ESG 9/20	ESG-M 9/17	ESG-M 8/20	MFF 9/4	MFF 10/6	ESG 10/17	ESG 10/17
Phoenix																																															
UC-TM 5							X	X	X																																						
UC-TM 6											X																																				
UC-TM 8													X																																		
UC-TM 10														X																																	
UC-TM 12														X *																																	
UC-TM 16														X *																																	
UC-TMF 4		X																																													
UC-TMF 5			X																																												
UC-TMF 6				X																																											
UC-TMF 10					X																																										
UC-TMF 12						X																																									
ZBF 3,5	X																																														
ZBF 4		X																																													
ZBF 5			X																																												
ZBF 6				X																																											
ZBF 10					X																																										
ZBF 12						X																																									
ZB 5							X	X	X																																						
ZB 6											X																																				
ZB 8													X																																		
ZB 10														X																																	
ZB 12														X *																																	
ZB 16														X *																																	
BN ZB 5,2										X																																					
BN ZB 7,5												X																																			
WAGO																																															
209-... (4 mm)																X	X																														
793-... (5 mm)																			X	X	X																										
793-... (6 mm)																						X	X																								
248-... (5 mm)																		X																													
Woertz																																															
RB/5x5																														X																	
RB/5x9																															X																
RB/5x12																																X															
RB/6x9																																	X														
RB/6x12																																		X													
Cabur																																															
CNU/8																																			X	X											
ABB-Stotz / Entrelec																																															
RC55																		X																													
RC410																X	X																														
RC510								X											X	X																											
RC610											X											X																									
RC810													X									X																									
MC512																																				X											
MC612																																					X										
MC812																																						X									
Wieland																																															
9705 A/5...							X	X	X																																						
9705 A/6...											X																																				
Telemecanique																																															
AB1-B5							X	X	X																																						
AB1-B6											X																																				
Murr																																															
KPX 4/10		X																																													
KPX 5/10...								X																																							
KPX 6/10...											X																																				
KPX 5/5-5 ZS			X																																												
KPX 6/5-6 ZS				X																																											
KWI / KLG / KET 5/10...								X																																							
KWI / KET 6/10...											X																																				

Markers

	MF 5/3,5	MF 5/4	MF 5/5	MF 5/6	MF 5/10	MF 5/12	MF 8/5	MF 10/5	MF 12/5	MF 4/5,2	MF 10/6	MF 5/7,5	MF 10/8	MF 10/10	MF 5/7,5	MF-W 9/4	MF-W 9/4.2 F	MF-W 5/5 mini	MF-W 9/5	MF-W 9/5 F	MF-W 9/5.2 F	MF-W 9/6	MF-W 9/6.2 F	MF-SI 8/5	MF-SI 10/5	MF-SI 8/6	MF-SI 10/6	MF-SI 7/5-6,5	MF-SI 10/5-6,5	MF-WO 5/5	MF-WO 9/5	MF-WO 12/5	MF-WO 9/6	MF-WO 12/6	MF 10/5 Cabur	MF 12/5 Cabur	MF-ABB 12/5	MF-ABB 12/6	MF-ABB 12/8	ESG 5/10	ESG 9/20	ESG-M 9/17	ESG-M 8/20	MFF 9/4	MFF 10/6	ESG 10/17	ESG 10/17
KSI 5/7																												X																			
KSI 5/10																													X																		
KSI 5/7-5																								X																							
KSI 5/10-5																									X																						
KSI 6/7-5																										X																					
KSI 6/10-5																											X																				
KAB 6/12																																		X													
KAB 5/5,4-5																														X																	
KAB 5/9-5																															X																
KAB 5/12-5																																X															
KAB 6/9-6																																	X														
WGO 5/5-5																		X																													
WGO 5/10-5																			X			X																									
WGO 5/10-5 F																				X	X		X																								
TK 4,5-7,5												X																																			
KS 5/10																																							X								
KES 20x8																																										X					
ABB 17-9																																									X						
KET SNK 5/12-5																																				X											
KET SNK 6/12-6																																					X										
KET SNK 8/12-8																																						X									
Festo																																															
ISB-6x10																																												X			
MH-BZ-80X																																											X				
IBS-10x17																																														X	
ISB-9x20																																								X							
IBS-8x20																																										X					
ISB-9x17																																									X						

* Dimensions may vary

WAD MultiCard

Intelligent solutions for expansive designations

The large surface areas which come with a time-saving folding mechanism

The WAD marker is the preferred choice for marking group functions. Locket to individual terminals, or the end brackets, this marker gives you the largest possible surface for your labelling.

WAD – the benefits to you

- WAD marker and cover for the terminals of the W-series and end brackets WEW 35/2 and ZEW 35/2
- Optimised: large labelling surfaces give you the best overview
- Top-quality and resistant printing with PrintJet ADVANCED printer

PrintJet ADVANCED

Signalling effect: WAD markers designed with PrintJet ADVANCED are ideally suited for eye catching colour coding of terminal strips.

For warning notices: WAD markers are available with lightning bolt symbols in special or standard print.

Halogen Free

Technical data

Material	Polyamide 66, halogen-free
UL 94 flammability rating	V2
Temperature range	-40 °C to 100 °C

Ordering data

Colour	International colour code colours, not contained in the range, are available on request.
Special printing	Specify special printing and colours per using the M-Print® PRO software.
Printing	Black or colour
Possible printing systems	PrintJet ADVANCED, PrintJet PRO
Minimum order quantity	1 pack = 5 cards

WAD MultiCard

WAD 5 — 5 mm

Terminal marker

WAD 5 MC B — 5 mm

Terminal marker

Technical data

	WAD 5	WAD 5 MC B
Material	Polyamide 66	Polyamide 66
Fire class acc. to UL 94	V-2	V-2
Ambient temperature (operational)	-40 °C...100 °C	-40 °C...100 °C
Width	5 mm	5 mm
Length	33.3 mm	33.3 mm

Ordering data

MultiCard Blank		Type	Qty.	Order No.	Type	Qty.	Order No.
Yellow	●	WAD 5 MC NE GE	48	1112920000	WAD 5 MC B GE/SW	48	1120450000
White	❍	WAD 5 MC NE WS	48	1112910000			
MultiCard custom printing							
To customer specification		WAD 5 MC SDR	12	1112930000			

Technical drawing / application

WAD MultiCard – connector markers for terminal and endbrackets

WAD MultiCard

WAD 8	8 mm	WAD 8 MC B	8 mm
Terminal marker		Terminal marker	

Technical data

Material	Polyamide 66	Polyamide 66
Fire class acc. to UL 94	V-2	V-2
Ambient temperature (operational)	-40 °C...100 °C	-40 °C...100 °C
Width	8 mm	8 mm
Length	33.3 mm	33.3 mm

Ordering data

MultiCard Blank					
Yellow	●	Type	Qty.	Order No.	Type	Qty.	Order No.
White	❍	WAD 8 MC NE GE	48	1112950000	WAD 8 MC B GE/SW	48	1120470000
MultiCard custom printing		WAD 8 MC NE WS	48	1112940000			
To customer specification		WAD 8 MC SDR	12	1112970000			

Technical drawing / application

WAD MultiCard

	WAD 12	11.9 mm	WAD 12 MC B	11.9 mm

Technical data

Material	Polyamide 66	Polyamide 66
Fire class acc. to UL 94	V-2	V-2
Ambient temperature (operational)	-40 °C...100 °C	-40 °C...100 °C
Width	11.9 mm	11.9 mm
Length	36.2 mm	36.2 mm

Ordering data

MultiCard Blank	Type	Qty.	Order No.	Type	Qty.	Order No.
Yellow	WAD 12 MC NE GE	32	2445080000	WAD 12 MC B GE/SW	32	2445090000
White	WAD 12 MC NE WS	32	2445070000			
MultiCard custom printing						
To customer specification	WAD 12 MC SDR	8	2445100000			

Technical drawing / application

Tag carriers
Compact modules for complex systems

Simple identification of component assemblies and terminal blocks

Tag carriers, in combination with the different Weidmüller terminal markers, deliver quick and efficient solutions for labelling of component assemblies and terminal blocks. Available to you, for every solution, is a suitable tag carrier that is tailored according to your needs and matched to the MultiCard product line.

Weidmüller tag carrier – the benefits to you

- Carge marking surface
- Protection against environmental influences
- Flexible folding mechanism
- Clear identification of assemblies
- Universal use on Grail and Top-hat rail

The group tag carrier SCHT 5 / SCHT 5 S can be directly snapped into the DIN rail TS 32 (G-rail) or the TS 35 (top-hat rail).

The ZGB 15 / ZGB 30 is a pivoting group tag carrier.

High level of protection for the labels against outside influences: The pouch of the EM 8/30 protects the inner workings similar to that of a clip fastener.

Tag carriers

WAD 27 — 27 mm

Terminal marker

WAD 27 — 27 mm

Terminal marker

Technical data

Material	Polyamide 66	Polyamide 66
Fire class acc. to UL 94	V-2	V-2
Ambient temperature (operational)	-40 °C...100 °C	-40 °C...100 °C
Application/manufacturer		
Width	27 mm	27 mm
Length	64 mm	64 mm

Ordering data

MultiCard Blank		Type	Qty.	Order No.	Type	Qty.	Order No.
White	❍	WAD 27 NEUTRAL	10	1062960000			
Yellow	●				WAD 27 M. BL.	10	1062860000

Technical drawing / application

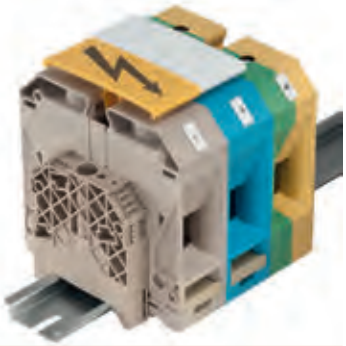

Tag carriers

	EM 8/30	ZGB
	7.2 mm	7 mm
	Terminal marker	Terminal marker

Technical data

	EM 8/30	ZGB
Material	Polypropylene	Polyamide 66
Fire class acc. to UL 94	HB	V-2
Ambient temperature (operational)	-40 °C...80 °C	-40 °C...100 °C
Application/manufacturer		
Width	7.2 mm	7 mm
Length	32.4 mm	15 mm

Ordering data

MultiCard Blank		Type	Qty.	Order No.	Type	Qty.	Order No.
Transparent		EM 8/30	50	1806120000			
White	❍				ZGB 15	20	1636530000
White	❍				ZGB 30	20	1611930000

Accessories

MultiCard		Type	Qty.	Order No.	Type	Qty.	Order No.
		ELS 6/30 MC NE WS	80	1045570000	WS 12/5 MC NE WS	720	1609860000
		ELS 6/30 MC NE GE	80	1045580000	DEK 5/5 MC SDR	200	1609810000
					DEK 5/30 MC NE WS	100	1951920000
MultiMark							
		ELS 6/30 MM WS	3000	2009980000			
		ELS 6/30 MM GE	3000	2010620000			
DIN A4 sheets							
	Paper	ESO 7 DIN A4 WS	10	1607720000	ESO 7 DIN A4 WS	10	1607720000
	Paper	ESO 7 DIN A4 GE	10	1634780000	ESO 7 DIN A4 GE	10	1634780000
	Polyester	ESO 7 P DIN A4 WS	10	1670390000	ESO 7 P DIN A4 WS	10	1670390000
	Polyester	ESO 7 P DIN A4 GE	10	1670400000	ESO 7 P DIN A4 GE	10	1670400000
Protective strip							
					STR 7 F.SCHT 7	20	0515300000

Technical drawing / application

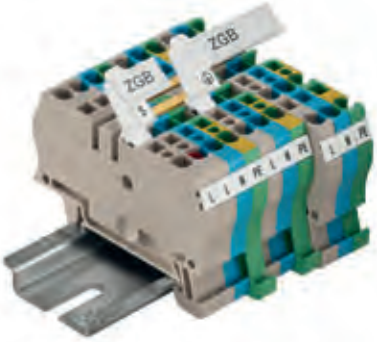

Tag carriers

Snap Mark	5 mm
Terminal marker	

BZT	5.07 mm
Tag carriers	

Technical data

Material	Polyamide 66	Polyamide 66
Fire class acc. to UL 94	V-2	V-2
Ambient temperature (operational)	-40 °C...100 °C	-40 °C...100 °C
Application/manufacturer		
Width	5 mm	5.07 mm
Length	23 mm	11.7 mm

Ordering data

MultiCard Blank		Type	Qty.	Order No.	Type	Qty.	Order No.
White	❍	SNAPMARK I	50	1805880000	BZT 1 WS 10/5	100	1805490000
White	❍				BZT 1 ZA WS 10/5	100	1805520000
White	❍				BZT 2 WS 10/5	100	1805480000

Accessories

MultiCard	Type	Qty.	Order No.	Type	Qty.	Order No.
	DEK 5/5 MC NE WS	1000	1609801044	WS 12/5 MC NE WS	720	1609860000
	WS 10/5 M MC NE WS	720	1792000000			

Technical drawing / application

Tag carriers

	SCHT 5	SCHT 5 S
	19.5 mm	9.5 mm
	Terminal marker	Terminal marker

Technical data

Material	Polyamide 66	Polyamide 66
Fire class acc. to UL 94	V-2	V-2
Ambient temperature (operational)	-40 °C...100 °C	-40 °C...100 °C
Application/manufacturer		
Width	19.5 mm	9.5 mm
Length	44.5 mm	44.5 mm

Ordering data

MultiCard Blank	Type	Qty.	Order No.	Type	Qty.	Order No.
Beige	SCHT 5	20	0292460000	SCHT 5 S	20	1631930000
White						

Accessories

MultiCard	Type	Qty.	Order No.	Type	Qty.	Order No.
	ELS 16/40 MC NE WS	40	1045620000	ELS 7/40 MC NE GE	40	1045650000
	ELS 16/40 MC NE GE	40	1045630000	ELS 7/40 MC NE WS	40	1045640000
MultiMark						
	ELS 16/40 MM WS	2000	2005200000			
	ELS 16/40 MM GE	2000	2005260000			
DIN A4 sheets						
Paper	ESO 5 DIN A4 WS	10	1607710000	ESO 5 S DIN A4 WS	10	1631920000
Paper	ESO 5 DIN A4 GE	10	1631350000			
Polyester	ESO 5 P DIN A4 WS	10	1670370000			
Polyester	ESO 5 P DIN A4 GE	10	1670380000			
Protective strip						
	STR 5 F.SCHT 5	20	0294000000	STR 5 S F.SCHT 5 S	20	1631940000

Technical drawing / application

Tag carriers

SCHT 7 — 8 mm

Terminal marker

Technical data

Material	Polyamide 66
Fire class acc. to UL 94	V-2
Ambient temperature (operational)	-40 °C...100 °C
Application/manufacturer	
Width	8 mm
Length	39.3 mm

Ordering data

MultiCard Blank	Type	Qty.	Order No.
Beige			
White	SCHT 7	20	0517960000

Accessories

MultiCard	Type	Qty.	Order No.
	DEK 5/5 MC NE WS	1000	1609801044
	WS 10/5 M MC NE WS	720	1792000000
MultiMark			
DIN A4 sheets			
Paper	ESO 7 DIN A4 WS	10	1607720000
Paper	ESO 7 DIN A4 GE	10	1634780000
Polyester	ESO 7 P DIN A4 GE	10	1670400000
Polyester	ESO 7 P DIN A4 WS	10	1670390000
Protective strip			
	STR 7 F.SCHT 7	20	0515300000

Technical drawing / application

ELS MultiCard
Resilient, inlay tags

A resilient interior for cable markers or tag carriers

Optimally designed for use in WKM cable markers or SchT 5-type tag carriers, the ELS tags meet the highest requirements where prominent identification of cables and terminal strips is needed. The high-quality markers are made of polyamide 66. This guarantees a constant, high-quality appearance and clear and simple presentation of information even in extreme conditions where oil, water or other fluids are present.

ELS inlay tags – the benefits to you

- Perfectly fitting: in flat form they are the perfect inserts for WKM or SchT 5-type
- Resistant: indestructible material characteristics ensure consistent marking quality

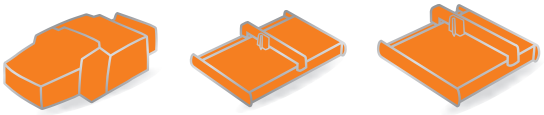

PrintJet ADVANCED | Plotter MCP Plus 2 | Plotter MCP Basic 2

The ELS 16/40 or ELS 6/30-type labels give maximum marking quality when they are inserted into WKM cable markers and fastened with cable ties.

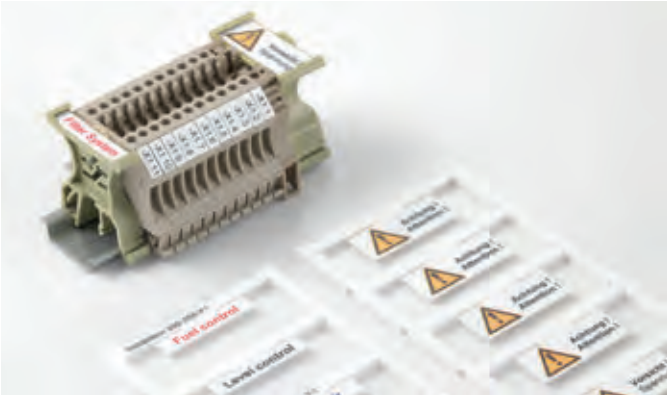

The ELS 16/40 and ELS 7/40 can be used for group identification by being positioned at the top of the carrier.

Halogen Free

Technical data

Material	Polyamide 66, halogen-free
UL 94 flammability rating	V2
Temperature range	-40 °C to 100 °C

Ordering data

Colour	International colour code colours, not contained in the range, are available on request.
Special printing	Specify special printing and colours per using the M-Print® PRO software.
Printing	Black or colour
Possible printing systems	PrintJet ADVANCED, PrintJet PRO, MCP Plus 2, MCP Basic 2
Notes on mounting	ELS 6/30: EM 8/30 (1806120000) ELS 7/40: SCHT 5 S (1631930000) ELS 16/40: SCHT 5 (0292460000)
Minimum order quantity	1 pack = 5 cards

ELS MultiCard

	ELS 6/30	6 mm	ELS 7/40	7 mm

Technical data

Material	Polyamide 66	Polyamide 66
Fire class acc. to UL 94	V-2	V-2
Ambient temperature (operational)	-40 °C...100 °C	-40 °C...100 °C
Application/manufacturer		
Width	6 mm	7 mm
Length	30 mm	40 mm

Ordering data

MultiCard Blank					
Yellow	●	Type	Qty.	Order No.	Type	Qty.	Order No.
White	❍	ELS 6/30 MC NE GE	80	1045580000	ELS 7/40 MC NE GE	40	1045650000
MultiCard custom printing		ELS 6/30 MC NE WS	80	1045570000	ELS 7/40 MC NE WS	40	1045640000
To customer specification		ELS 6/30 MC SDR	16	1045660000	ELS 7/40 MC SDR	8	1045700000
MultiCard Blank, self adhesive							
White	❍	ELS 6/30 K MC NE WS	80	1191390000			

Accessories

Type	Qty.	Order No.	Type	Qty.	Order No.
EM 8/30	50	1806120000	SCHT 5 S	20	1631930000
WKM 8/30	50	1631910000			

Technical drawing / application

ELS MultiCard

ELS 16/40 | **16 mm**

Technical data

Material	Polyamide 66
Fire class acc. to UL 94	V-2
Ambient temperature (operational)	-40 °C...100 °C
Application/manufacturer	
Width	16 mm
Length	40 mm

Ordering data

MultiCard Blank	Type	Qty.	Order No.
Yellow ●	ELS 16/40 MC NE GE	40	1045630000
White ❍	ELS 16/40 MC NE WS	40	1045620000
MultiCard custom printing			
To customer specification	ELS 16/40 MC SDR	8	1045690000
MultiCard Blank, self adhesive			
White ❍	ELS 16/40 K MC NE WS	40	1411800000

Accessories

Type	Qty.	Order No.
SCHT 5	20	0292460000
WKM 18/43	50	1610700000

Technical drawing / application

Dekafix and WS terminal markers
Make your labelling more efficient

Snaps securely into place in combination

MultiMark terminal markers make use of an innovative composite material of two components. The hard base contour of the marker snaps securely into the connector. The elastic surface finish makes the marker easy to mount. This specially punched material enables the strips to be stretched to accommodate the slight variations in spacing that tend to add up, especially with long terminal blocks. Another advantage: the excellent printability of the surface material guarantees durable and wear-resistant labelling. A print resolution of 300 dpi also produces a easy to read script.

Your benefits with MultiMark

- Compatible with Weidmueller terminal blocks
- Firm hold and durable printing
- Continuous strips save installation time
- Easy mounting thanks to an innovative composite material
- Space for multi-line spacing

THM MMP

The smart composite material ensures perfect usage and handling.

Halogen Free

Technical data DEK/WS

Material	PC-ABS, TPU
UL 94 flammability rating	V2
Temperature range	-50 °C to 90 °C

Ordering data DEK/WS

Possible printing systems	THM MMP
Ink ribbon	RIBBON MM-TB 25/360 SW (2005090000)

Technical data ELS

Material	Polyester
UL 94 flammability rating	HB
Temperature range	-40 °C to 150 °C

Ordering data ELS

Possible printing systems	THM MMP, THM Plus M
Ink ribbon	RIBBON MM 80/300 SW (2005080000)

DEK/WS: Flexible connector markers – print, clip, finished

Terminal markers DEK, WS

Technical data

Material	Temperature range	Fire class acc. to UL 94	Adhesive	Order No.	Type
PC-ABS, TPU	-50...90 °C	V-2		2005090000	RIBBON MM-TB 25/360 SW

Ordering data

Order No.	Type		Colour	Length	Width	Qty.
2007100000	DEK 5/3.5 MM WS	❍	White	5 mm	3.5 mm	1000
2007110000	DEK 5/5 MM WS	❍	White	5 mm	5 mm	800
2007120000	DEK 5/6 MM WS	❍	White	5 mm	6 mm	600
2007130000	DEK 5/8 MM WS	❍	White	5 mm	8 mm	500
2448860000	DEK-A 5/8 MM WS	❍	White	5 mm	8 mm	500
2007140000	WS 8/3.5 MM WS	❍	White	8 mm	3.5 mm	1000
2007150000	WS 8/5 MM WS	❍	White	8 mm	5 mm	800
2007160000	WS 8/6 MM WS	❍	White	8 mm	6 mm	600
2007170000	WS 8/8 MM WS	❍	White	8 mm	8 mm	500
2448930000	WS-A 8/8 MM WS	❍	White	8 mm	8 mm	500
2007180000	WS 12/3.5 MM WS	❍	White	12 mm	3.5 mm	1000
2007190000	WS 12/5 MM WS	❍	White	12 mm	5 mm	800
2007200000	WS 12/6 MM WS	❍	White	12 mm	6 mm	600
2007210000	WS 12/8 MM WS	❍	White	12 mm	8 mm	500
2448920000	WS-A 12/8 MM WS	❍	White	12 mm	8 mm	500

Inlay tags ELS

Technical data

Material	Temperature range	Fire class acc. to UL 94	Adhesive	Order No.	Type
Polyester	-40...150 °C	HB		2005080000	RIBBON MM 80/360 SW

Ordering data

Order No.	Type		Colour	Length	Width	Qty.
2010620000	ELS 6/30 MM GE	●	Yellow	30 mm	6 mm	3000
2009980000	ELS 6/30 MM WS	❍	White	30 mm	6 mm	3000
2005240000	ELS 8/20 MM GE	●	Yellow	20 mm	8 mm	3000
2005180000	ELS 8/20 MM WS	❍	White	20 mm	8 mm	3000
2005260000	ELS 16/40 MM GE	●	Yellow	40 mm	16 mm	2000
2005200000	ELS 16/40 MM WS	❍	White	40 mm	16 mm	2000

Wire and cable markers

Wire and cable markers	Introduction	D.2
	Overview	D.5
	SF/SFR MultiCard – open wire and cable markers	D.6
	SFX MultiCard – cable markers with cable tie feed-through	D.8
	SFC MultiCard – clip technology for wires and cables	D.10
	TM-I MultiCard – inlay tags	D.12
	Transparent sleeves	D.14
	ELS MultiCard – inlay tags	D.18
	WKM – transparent sleeve for cable tie installation	D.20
	MetalliCard – individual processing	D.24
	MultiMark – wire and cable markers	D.28
	MultiMark – shrink sleeves	D.32
	WriteOn – cable labels	D.40
	CableLine® – Introduction	D.44
	CableLine® – CLI C – closed wire markers	D.46
	CableLine® – CLI O – open wire markers	D.78
	CableLine® – CLI M – cable markers and holders	D.84
	CableLine® – Accessories	D.92
	WSM – stainless steel markers	D.94
	Cable ties	D.98

Wire and cable markers

Weidmüller's range of wire and cable markers provide you with solutions for a huge variety of applications.

The applications range from thin wires through to cables with large external diameters. Amongst others, the assortment includes combination systems with individual markers, transparent sleeves and markers that are fastened using cable ties.

Open and closed, printed or blank markers for individual printing are available.

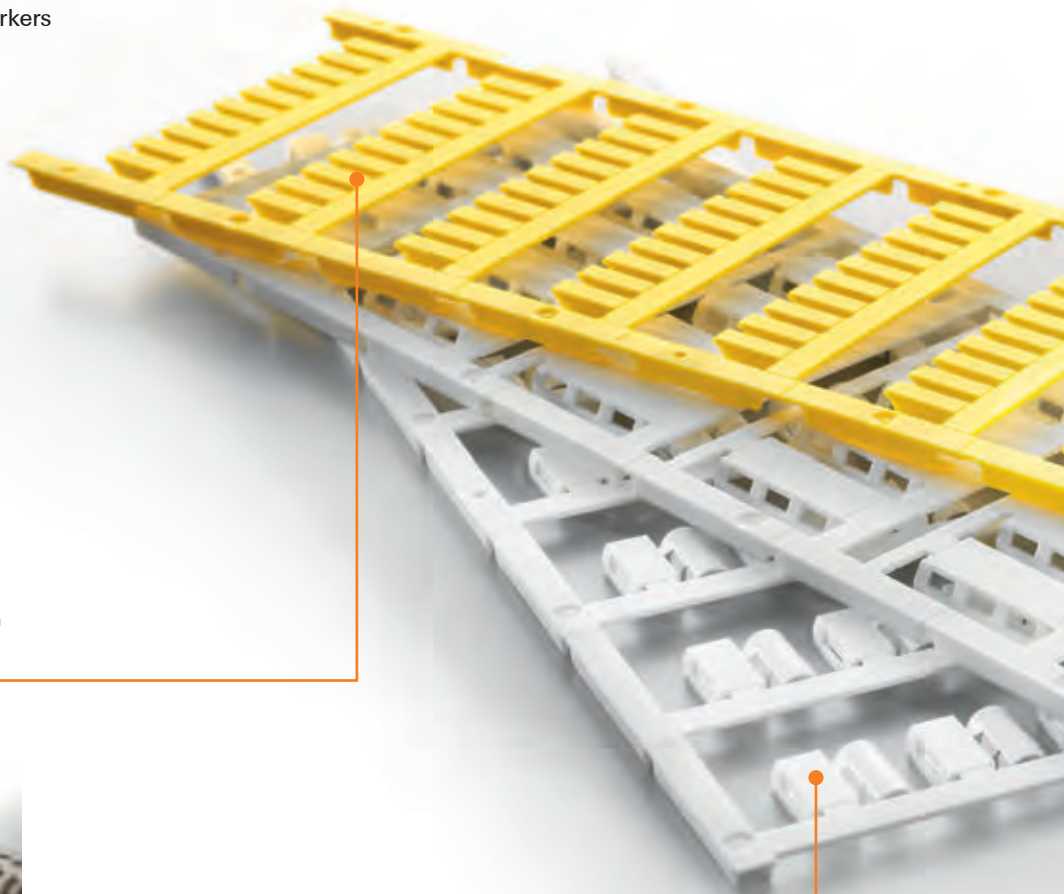

SlimFix SF/SFR
SlimFix are wire and cable markers featuring a space-saving design. The markers can also be attached to the wires after these have been installed.

SlimFix Clip SFC
With its exclusive locking mechanism, the SFC marker offers the security of a closed marker with the ease of installation of an open marker.

TM-I with TM sleeves
The special contour of the TM-I inlay tags in MultiCard format means easy assembly and firm seating in the appropriate TM sleeves.

SFX cable markers
The SFX markers are suitable for identifying cables that are 7 mm in diameter and are distinguishable by their large marking surface.

PrintJet ADVANCED
In combination with the M-Print® PRO software, or as a standalone solution, the PrintJet ADVANCED inkjet printer is the optimum addition to the MultiCard range for high-quality, resistant, colour printing, on site.

www.PrintJetADVANCED.com

Wire and cable markers

Halogen-free and practically free of pollutants, Weidmüller's wire and cable markers comply with both European and in-house standards of well-known system manufacturers.

Systems are available for

- Clip-on, ready-to-use printed markers according to individual marking requirements.
- Marking by digits from a standard set of characters.
- Combination of individual pre-printed digits to form a character code.
- Customer labelling with PrintJet ADVANCED, MCP plotters, THM printers, laser printers (DIN A4 format) or STI pens.

A sample selection is available in Weidmüller's sample boxes wire and cable markers: order no. **1640420000**.

Owing to the sheer number of possible applications and environmental influences such as moisture, radiation, gases or heat/cold to which the products can be exposed, Weidmüller accepts no liability for the suitability of products in all customer applications. Suitability tests for specific applications must therefore be carried out by the customer. However, Weidmüller will be happy to provide help and advice upon request.

Due to the different identification system available on the market, we wish to point out that Weidmüller does not guarantee industrial identification products if the Weidmüller components (markers – transparent sleeves – ink/toner/colour ink ribbons – printing systems) are combined with third-party products, unless Weidmüller has explicitly agreed for the purpose of an individual application.

Applications chart

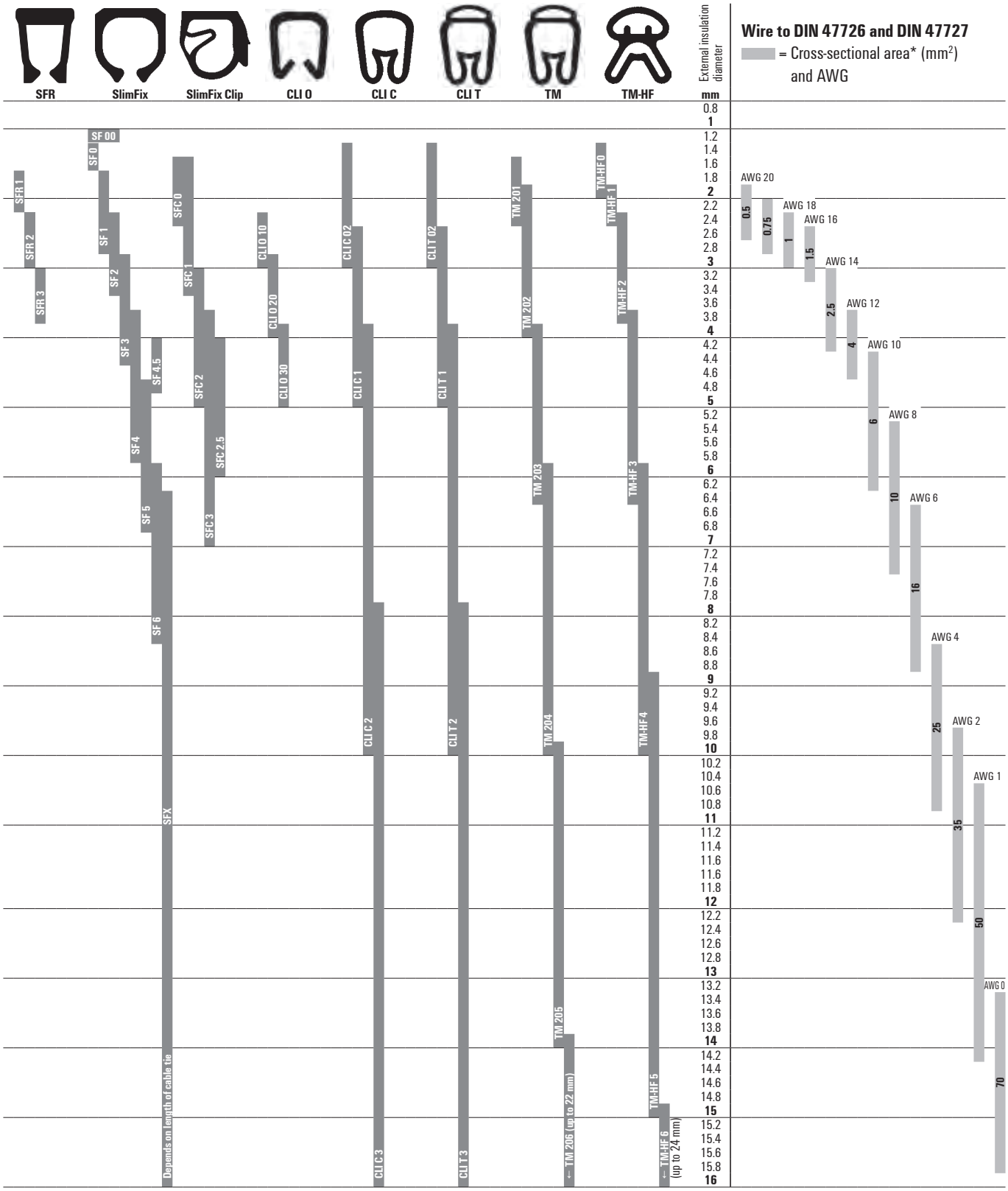

* Non-binding reference values. Please take into consideration the external diameter of the insulation.

SF/SFR – SlimFix MultiCard

Open cable markers for tough requirements

The compact class tailored to lie close to the cable

SlimFix cable markers from the SF/SFR range are true all-rounders when it comes to meeting tough requirements. The markers are approved and listed for rail transportation systems and available in 12 mm or 21 mm long sleeves. They are suitable for use in areas with exposure to vibrations. Thanks to their close cut and compact shape, the sleeves attach tightly to the cables and give you an optimal cross-section range and secure marking when installing as a result. The SF range covers diameters from 1.0 to 7.8 mm and is fixed in position using the specialised SF tool. The SFR range covers cable diameters from 1.7 to 3.7 mm. The range is manually attached without the use of tools and does not influence adhesion of the markers in any way.

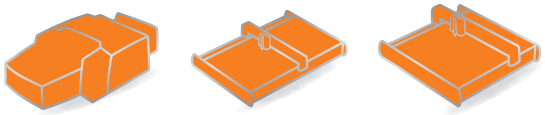

PrintJet ADVANCED | Plotter MCP Plus 2 | Plotter MCP Basic 2

SlimFix SF/SFR – the benefits to you

- Secure: firmly fixed, halogen-free and vibration-resistant sleeves
- Tested: recognised and listed for rail transportation systems
- User-friendly: the best material and assembly characteristics
- Also available in fire class V0. Please contact Weidmüller for details.

The fixed, SF-type SlimFix markers are fitted using the SF-tool in a matter of seconds and guarantee you a secure fit.

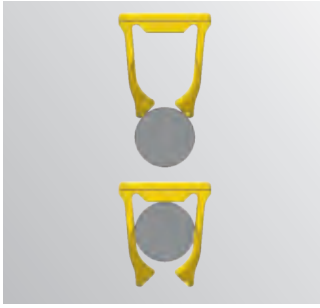

User-friendly, without any impairment to the excellent adhesive properties: tool-free assembly of SFR-type SlimFix markers.

Halogen Free

Technical data

Material	Polyamide 66, halogen-free
UL 94 flammability rating	V2
Temperature range	-40 °C to 100 °C

Ordering data

Colour	International colour code colours, not contained in the range, are available on request.
Special printing	Specify special printing and colours per using the M-Print® PRO software.
Printing	Black or colour
Possible printing systems	PrintJet ADVANCED, PrintJet PRO, MCP Plus 2, MCP Basic 2
Notes on mounting	SF: Slide onto unconnected wires; attach to connected wires using SlimFix tool
	SFR: by pressing onto the wire
Minimum order quantity	1 pack = 5 cards

Selection table

Type	Cond. ext. Ø. (max.) mm	Cond. cross-section mm²
SF 00	0.9 / 1.00 - 1.30	< 0.25
SF 0	1.20 - 1.60	0.25 - 0.50
SF 1	1.70 - 2.10	0.50 - 0.75
SF 2	2.20 - 2.90	0.75 - 1.50
SF 3	3.00 - 3.70	1.50 - 2.50
SF 4	3.60 - 6.00	2.50 - 4.00
SF 4.5	4.10 - 4.90	4.00 - 6.00
SF 5	4.80 - 7.40	6.00 - 10.00
SF 6	5.80 - 7.80	10.00 - 16.00
SFR 1	1.70 - 2.10	0.50 - 0.75
SFR 2	2.20 - 2.90	0.75 - 1.50
SFR 3	3.00 - 3.70	1.50 - 2.50

SlimFix SF

Technical data

Material	Temperature range	Fire class acc. to UL 94	Halogen
Polyamide 66	-40 °C...100 °C	V-2	No

Ordering data

Type	Printing area	Length	Qty.	White Order No.	Yellow Order No.	Blue Order No.	Red Order No.	CSP Order No.
SF 00/12	12x3.2 mm	12 mm	400	1919290000	1919260000	1919270000	1919280000	1919300000
SF 00/21	21x3.2 mm	21 mm	400	1918580000	1918560000	1918590000	1918570000	1918530000
SF 0/12	12x3.2 mm	12 mm	400	1919240000	1919210000	1919220000	1919230000	1919250000
SF 0/21	21x3.2 mm	21 mm	400	1918500000	1918480000	1918510000	1918490000	1918470000
SF 1/12	12x3.2 mm	12 mm	400	1919390000	1919340000	1919360000	1919320000	1919420000
SF 1/21	21x3.2 mm	21 mm	400	1918630000	1918610000	1918620000	1918600000	1918640000
SF 2/12	12x3.6 mm	12 mm	400	1919490000	1919470000	1919480000	1919460000	1919500000
SF 2/21	21x3.6 mm	21 mm	400	1918690000	1918660000	1918700000	1918670000	1918650000
SF 3/12	12x4.6 mm	12 mm	320	1919540000	1919520000	1919550000	1919530000	1919510000
SF 3/21	21x4.6 mm	21 mm	320	1918910000	1918890000	1918920000	1918900000	1918880000
SF 4.5/21	21x7.4 mm	21 mm	96	1919020000	1919000000	1919030000	1919010000	1918990000
SF 4/12	12x5.7 mm	12 mm	128	1919600000	1919580000	1919590000	1919570000	1919610000
SF 4/21	21x5.7 mm	21 mm	192	1919080000	1919060000	1919090000	1919070000	1919050000
SF 5/12	12x7.4 mm	12 mm	160	1919650000	1919620000	1919630000	1919640000	1919660000
SF 5/21	21x7.4 mm	21 mm	160	1919140000	1919120000	1919150000	1919130000	1919110000
SF 6/21	21x8.4 mm	21 mm	160	1919190000	1919170000	1919200000	1919180000	1919160000

Accessories

Type	Additional text	Qty.	Order No.
SF-TOOL 00-6	SLIMFIXTOOL FUER SF 00 BIS 6	10	1950820000
SF-TOOL 1	SLIM-FIX T FUER SF 1	10	1782970000
SF-TOOL 2-3	SLIM-FIX T FUER SF 2-3	10	1782960000
SF-TOOL 4-5	SLIM-FIX T FUER SF 4-5	10	1782980000
SF-Tool-Sortiment	3 PIECES OF TOOL 1, TOOL 2-3, TOOL 4-5	1	1770080000

SlimFix SFR

Technical data

Material	Temperature range	Fire class acc. to UL 94	Halogen
Polyamide 66	-40 °C...100 °C	V-2	No

Ordering data

Type	Printing area	Length	Qty.	White Order No.	Yellow Order No.	CSP Order No.
SFR 1/12	12x3.2 mm	12 mm	400	1318640000	1318650000	1318770000
SFR 1/21	21x3.2 mm	21 mm	400	1318710000	1318720000	1318810000
SFR 2/12	12x3.2 mm	12 mm	400	1318660000	1318670000	1318780000
SFR 2/21	21x3.2 mm	21 mm	400	1318730000	1318740000	1318820000
SFR 3/12	12x4.6 mm	12 mm	256	1318680000	1318690000	1318790000
SFR 3/21	21x4.6 mm	21 mm	256	1318750000	1318760000	1318830000

SFX – SlimFix MultiCard

Intelligent cable marking with cable tie feed-through

Wide range of options and handling advantages

The SFX-range of SlimFix markers can be used for cable diameters from 7.0 mm. The maximum diameter is only limited by the length of the cable tie that is used. The versions with ergonomically designed cable tie feedthrough are particularly easy to handle. A bevel makes feeding the cable tie-in simple. This contributes considerably towards time savings. In addition the secure fastening of the SlimFix SFX is particularly significant where there are high mechanical demands.
Not every environment specification is easy and uncritical. Even in obvious clean workshops there are conditions like temperature, UV-light which are caused by simple fluorescent lamps or low volumes of chemical compounds that have an effect on the life time of every product made of plastic. That's why Weidmüller enlarged the range of the well known MultiCard cable markers of type SFX with new variants to improve the durability. Furthermore the flammability class is improved to V0 acc. UL 94.

SlimFix SFX – the benefits to you

- Large variety: the right size for every label
- Time optimised: simple assembly thanks to the ergonomically designed cable tie feed-through
- Sturdy: resistant even with high mechanical demands

Halogen Free

Technical data SFX V2

Material	Polyamide 66, halogen-free
UL 94 flammability rating	V2
Temperature range	-40 °C to 100 °C

Technical data SFX V0

Material	Polyamide 66, halogen-free
UL 94 flammability rating	V0
Temperature range	-50 °C to 120 °C

Ordering data

Colour	International colour code colours, not contained in the range, are available on request.
Special printing	Specify special printing and colours per using the M-Print® PRO software.
Printing	Black or colour
Possible printing systems	PrintJet ADVANCED, PrintJet PRO, MCP Plus 2, MCP Basic 2
Notes on mounting	Attach using cable ties
Minimum order quantity	1 pack = 5 cards

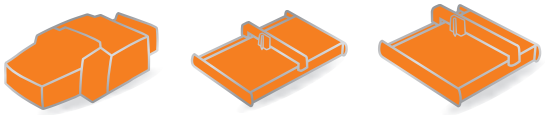

PrintJet ADVANCED | Plotter MCP Plus 2 | Plotter MCP Basic 2

The maximum diameter of the marker is determined by the length of the cable tie; it can be secured by the use of one or two cable ties.

Optimum space usage in the application area and needs-based labelling surfaces of various sizes.

Optimised assembly properties thanks to the bevelled cable tie feed-through which is found in the SFX 9/24 S, SFX 9/40 S and SFX 10/60 S-type markers.

SlimFix SFX V2

Technical data

Material	Temperature range	Fire class acc. to UL 94	Halogen	Conductor O.D.	Connection cross-section
Polyamide 66	-40 °C...100 °C	V-2	No	7 - 40 mm	16 - 500 mm²

Ordering data

Type	Printing area	Length	Qty.	White Order No.	Yellow Order No.	Blue Order No.	Red Order No.	CSP Order No.
SFX 9/24	23.9x9 mm	24 mm	160	1852490000	1852460000	1852500000	1852470000	1852480000
SFX 10/23	23x5 mm	23 mm	160	1852390000	1852360000	1852400000	1852370000	1852380000
SFX 11/60	11x44 mm	60 mm	60	1860120000	1860150000	1051870000	1963650000	1860140000
SFX 14/23	23x8.2 mm	23 mm	160	1852440000	1852410000	1852450000	1852420000	1852430000
SFX 30/60	30 x 45 mm	60 mm	30	1083230000	1083240000	1369540000	1369550000	1083260000
SFX 9/24 S	23.9x9 mm	24 mm	120	1323440000	1323450000	1323480000	1323470000	1323490000
SFX 9/40 S	8.5x40 mm	40 mm	80	1248760000	1248770000	1248790000	1248780000	1248740000
SFX 10/60 S	9.5x60 mm	60 mm	50	1248810000	1248820000	1248840000	1248830000	1248750000

SlimFix SFX V0

Technical data

Material	Temperature range	Fire class acc. to UL 94	Halogen	Conductor O.D.	Connection cross-section
Polyamide 66	-50 °C...120 °C	V-0	No	7 - 40 mm	16 - 500 mm²

Ordering data

Type	Printing area	Length	Qty.	White Order No.	Yellow Order No.
VT SFX 9/24 V0	23.9x9 mm	24 mm	320	1727740001	1727740004
VT SFX 10/23 V0	23x5 mm	23 mm	320	1727770001	1727770004
VT SFX 14/23 V0	23x8.2 mm	23 mm	320	1689490001	1689490004
SFX 9/24 S V0	23.9x9 mm	24 mm	120	2009930000	2009940000
SFX 9/40 S V0	8.5x40 mm	40 mm	80	2009910000	2009920000
SFX 10/60 S V0	9.5x60 mm	60 mm	50	2009890000	2009900000
SFX 11/60 V0	11x44 mm	60 mm	60	1432750000	1076890000

SFC – SlimFix Clip MultiCard

A convenient clip system for wires and cables

Highly durable markers with extra security

The halogen-free SlimFix Clips are made from sturdy polyamide 66 and combine two advantages in one product. Their unique clip closure means they can be fitted at every stage in the installation as easily as an open marker while still offering you the application-based security of a closed marker.
The markers are designed for wire and cable diameters from 1.5 to 7.0 mm, have labelling surfaces up to 30 mm long to give you enough space for extensive character strings which are easily legible and can be printed onto the differently coloured markers using the PrintJet ADVANCED printer.

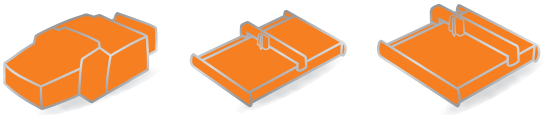

PrintJet ADVANCED | Plotter MCP Plus 2 | Plotter MCP Basic 2

SlimFix Clip SFC – the benefits to you

- Compact: secure and quick fitting without additional tools
- Informative: large labelling surface for long character strings
- Strong combinations: different colours and sizes
- Individual: can be printed using PrintJet ADVANCED

The SFC is fitted quickly and simply using its clip closure system – no need for additional tools.

Optimal cross-sectional range in all sizes: SFC-type markers in 5 sizes for wire diameters from 1.5 to 7.0 mm.

Halogen Free

Technical data

Material	Polyamide 66, halogen-free
UL 94 flammability rating	V2
Temperature range	–40 °C to 100 °C

Ordering data

Colour	International colour code colours, not contained in the range, are available on request.
Special printing	Specify special printing and colours per using the M-Print® PRO software.
Printing	Black or colour
Possible printing systems	PrintJet ADVANCED, PrintJet PRO, MCP Plus 2, MCP Basic 2
Minimum order quantity	1 pack = 5 cards

Selection table

Type	Wire, ext. ø	Wire cross-section
SFC 0	1.5 - 2.5 mm	0.5 - 1.0 mm²
SFC 1	2.0 - 3.5 mm	0.75 - 2.5 mm²
SFC 2	3.0 - 5.0 mm	2.5 - 4.0 mm²
SFC 2.5	4.0 - 6.0 mm	4.0 - 10 mm²
SFC 3	3.5 - 7.0 mm	4.0 - 10 mm²

SlimFix SFC

Technical data

Material	Temperature range	Fire class acc. to UL 94	Halogen
Polyamide 66	-40 °C...100 °C	V-2	No

Ordering data

Type	Printing area	Length	Qty.	White Order No.	Yellow Order No.	Blue Order No.	Red Order No.	CSP Order No.
SFC 0/12	12x4.1 mm	12 mm	200	1813130000	1813160000	1813170000	1813150000	1813180000
SFC 0/21	21x4.1 mm	21 mm	200	1813190000	1813210000	1813220000	1813200000	1813230000
SFC 0/30	30x4.1 mm	30 mm	150	1813240000	1813260000	1813270000	1813250000	1813280000
SFC 1/12	12x4.1 mm	12 mm	200	1747320001	1747320004	1747320002	1747320003	1752720000
SFC 1/21	21x4.1 mm	21 mm	200	1779080001	1779080004	1779080002	1779080003	1779090000
SFC 1/30	30x4.1 mm	30 mm	150	1805760000	1805730000	1805720000	1805740000	1805750000
SFC 2.5/12	12x5.8 mm	12 mm	120	1062000000	1062010000	1062030000	1062020000	1062040000
SFC 2.5/21	21x5.8 mm	21 mm	120	1062050000	1062070000	1062090000	1062080000	1062110000
SFC 2/12	12x5.8 mm	12 mm	120	1758320001	1758320004	1758320002	1758320003	1763480000
SFC 2/21	21x5.8 mm	21 mm	120	1805810000	1805780000	1805770000	1805790000	1805800000
SFC 2/30	30x5.8 mm	30 mm	90	1805870000	1805830000	1805820000	1805850000	1805860000
SFC 3/12	12x5 mm	12 mm	80	1025220000	1025230000	1025250000	1025240000	1025550000
SFC 3/21	21x5 mm	21 mm	80	1025260000	1025270000	1025300000	1025290000	1025560000
SFC 3/30	30x5 mm	30 mm	60	1025310000	1025320000	1025340000	1025330000	1025570000

TM-I MultiCard – inlay tags

Contour-hugging signs for all sleeves

The compatible markers with the bonus of being exchangeable

The 12 to 30 mm long TM-I signs stand out on all levels due to their maximum flexibility when assembling sleeves. The sophisticated contouring of the signs ensures that they fit securely and also allow for easy assembly and exchange. The project marking surface is typical for MultiCard markers and gives maximum clarity during isolation and assembly. For this, fitting or exchanging the signs can be done easily before or after the sleeves have been attached. The markers are recognised and listed for transportation engineering. The markers in the range come in five, partly combinable, lengths and are compatible with many commonly available sleeves. The right sign for every sleeve!

TM-I – the benefits to you

- Strong detail: ideal assembly characteristics thanks to the special sign contour
- Clear: project marker surfaces for better orientation and easy isolation
- Optional: can be used with many commonly available sleeves
- Not suited for labelling with P-Ink or STI pen in combination with CLI T sleeves

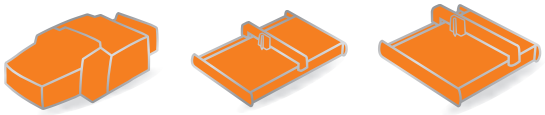

PrintJet ADVANCED | Plotter MCP Plus 2 | Plotter MCP Basic 2

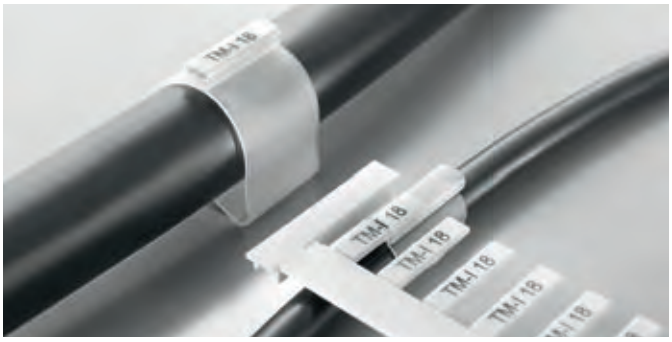

Trouble-free assembly before or after the sleeve is fitted as well as easy replacement of the signs.

Always the right sign length, for character sequences of up to 21 characters.

For differentiated marking of different information in one place, the TM-I 12/18 has two combinable sign lengths.

Halogen Free

Technical data

Material	Polyamide 66, halogen-free
UL 94 flammability rating	V2
Temperature range	-40 °C to 100 °C

Ordering data

Colour	International colour code colours, not contained in the range, are available on request.
Special printing	Specify special printing and colours per using the M-Print® PRO software.
Printing	Black or colour
Possible printing systems	PrintJet ADVANCED, PrintJet PRO, MCP Plus 2, MCP Basic 2
Minimum order quantity	1 pack = 5 cards

TM-I

Technical data

Material	Temperature range	Fire class acc. to UL 94	Halogen
Polyamide 66	-40...100 °C	V-2	No

Ordering data

Order No.	Type		Colour	Length	Width	Qty.
1718411044	TM-I 12 MC NE WS	❍	White	12 mm	4 mm	320
1718411686	TM-I 12 MC NE RT	●	Red	12 mm	4 mm	320
1718411687	TM-I 12 MC NE GE	●	Yellow	12 mm	4 mm	320
1718411693	TM-I 12 MC NE BL	●	Blue	12 mm	4 mm	320
1323730000	TM-I 12/18 MC NE WS	❍	White	30 mm	4 mm	240
1421170000	TM-I 12/18 MC NE RT	●	Red	30 mm	4 mm	240
1409630000	TM-I 12/18 MC NE GE	●	Yellow	30 mm	4 mm	240
1421160000	TM-I 12/18 MC NE BL	●	Blue	30 mm	4 mm	240
1609981044	TM-I 15 MC NE WS	❍	White	15 mm	4 mm	400
1609981686	TM-I 15 MC NE RT	●	Red	15 mm	4 mm	400
1609981687	TM-I 15 MC NE GE	●	Yellow	15 mm	4 mm	400
1609981693	TM-I 15 MC NE BL	●	Blue	15 mm	4 mm	400
1718431044	TM-I 18 MC NE WS	❍	White	18 mm	4 mm	320
1718431686	TM-I 18 MC NE RT	●	Red	18 mm	4 mm	320
1718431687	TM-I 18 MC NE GE	●	Yellow	18 mm	4 mm	320
1718431693	TM-I 18 MC NE BL	●	Blue	18 mm	4 mm	320
1680411044	TM-I 20 MC NE WS	❍	White	20 mm	4 mm	400
1680411686	TM-I 20 MC NE RT	●	Red	20 mm	4 mm	400
1680411687	TM-I 20 MC NE GE	●	Yellow	20 mm	4 mm	400
1680411693	TM-I 20 MC NE BL	●	Blue	20 mm	4 mm	400
1428480000	TM-I 23 MC NE WS	❍	White	23 mm	4 mm	400
1428510000	TM-I 23 MC NE RT	●	Red	23 mm	4 mm	400
1428490000	TM-I 23 MC NE GE	●	Yellow	23 mm	4 mm	400
1428520000	TM-I 23 MC NE BL	●	Blue	23 mm	4 mm	400
1876390000	TM-I 30 MC NE WS	❍	White	30 mm	4 mm	300
1876380000	TM-I 30 MC NE RT	●	Red	30 mm	4 mm	300
1876370000	TM-I 30 MC NE GE	●	Yellow	30 mm	4 mm	300
1876400000	TM-I 30 MC NE BL	●	Blue	30 mm	4 mm	300

TM-I custom printing

Technical data

Material	Temperature range	Fire class acc. to UL 94	Halogen
Polyamide 66	-40...100 °C	V-2	No

Ordering data

Order No.	Type	Colour	Length	Width	Qty.
1718420000	TM-I 12 MC SDR	CSP	12 mm	4 mm	64
1323720000	TM-I 12/18 MC SDR	CSP	30 mm	4 mm	48
1609990000	TM-I 15 MC SDR	CSP	15 mm	4 mm	80
1718440000	TM-I 18 MC SDR	CSP	18 mm	4 mm	64
1680420000	TM-I 20 MC SDR	CSP	20 mm	4 mm	80
1433880000	TM-I 23 MC SDR	CSP	23 mm	4 mm	80
1876320000	TM-I 30 MC SDR	CSP	30 mm	4 mm	60

Transparent sleeves

Better perspective for cables and wires

The right sleeves for flexible applications

The TM sleeves made out of PVC or halogen-free material are almost free from contaminants. The sleeves are a precisely-made markers for wires and cables with an external diameter from 1 to 40 mm. The simple mounting holds firmly to the wire and the sleeves can then be specifically marked using an inlay tag in the MultiCard format. Thanks to the slim design in five different lengths, the TM sleeves can be quickly and safely mounted even in compact cabinet systems.

TM/HF sleeves – the benefits to you

- Versatile: Different sizes and lengths for a large variety of applications
- Safe: Firm hold on all common cables and wires
- Flexible: Labelling with the inlay tag in the MultiCard format

Environmentally friendly: TM/HF sleeves are free of halogen and, in the case of fire, do not cause corrosive or toxic gasses. Therefore as they are almost free from contaminants, the markers meet the highest safety requirements.

CLI T sleeves are not suited for labelling with P-Ink or STI pen in connection with TM-I MultiCard.

A marker for a wide variety areas application – with the TM sleeves you will always have a precise marker.

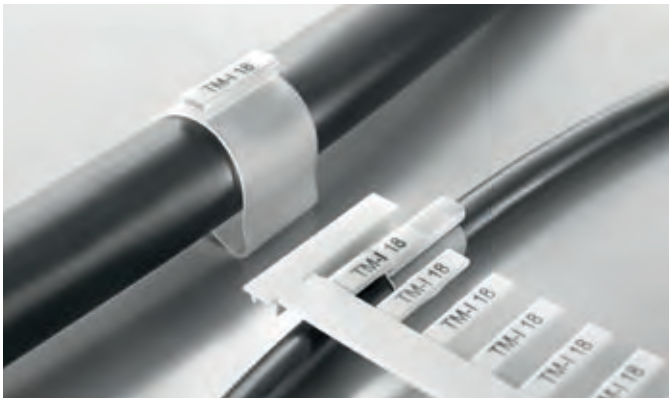

The TM sleeves are particularly suitable for outside applications, thanks to the protected insertion element.

TM/HF

Technical data

Material	Temperature range	Colour
Polyethylene LD	-40 °C...80 °C	Transparent

Ordering data

Order No.	Type	Length	Conductor O.D.	Connection cross-section	Qty.
1719760000	TM 0/12 HF/HB	12 mm	1.3 - 2 mm	0.22 - 0.5 mm²	1000
1719770000	TM 0/18 HF/HB	18 mm	1.3 - 2 mm	0.22 - 0.5 mm²	1000
1719780000	TM 1/12 HF/HB	12 mm	1.8 - 2.5 mm	0.5 - 1.5 mm²	1000
1719790000	TM 1/18 HF/HB	18 mm	1.8 - 2.5 mm	0.5 - 1.5 mm²	1000
1719800000	TM 2/12 HF/HB	12 mm	2.5 - 4 mm	0.75 - 2.5 mm²	1000
1719810000	TM 2/18 HF/HB	18 mm	2.5 - 4 mm	0.75 - 2.5 mm²	1000
1719820000	TM 3/12 HF/HB	12 mm	4 - 6.5 mm	2.5 - 6 mm²	500
1719830000	TM 3/18 HF/HB	18 mm	4 - 6.5 mm	2.5 - 6 mm²	500
1719840000	TM 4/12 HF/HB	12 mm	6 - 10 mm	10 - 35 mm²	500
1719850000	TM 4/18 HF/HB	18 mm	6 - 10 mm	10 - 35 mm²	500
1719860000	TM 5/12 HF/HB	12 mm	9 - 15 mm	25 - 70 mm²	200
1719870000	TM 5/18 HF/HB	18 mm	9 - 15 mm	25 - 70 mm²	200
1719880000	TM 6/12 HF/HB	12 mm	15 - 24 mm	35 - 150 mm²	200
1719890000	TM 6/18 HF/HB	18 mm	15 - 24 mm	35 - 150 mm²	200
1748820000	TMX 18 HF/HB	18 mm	10 - 317 mm	16 - 150 mm²	500

TM/HF - twin SLEEVE

Technical data

Material	Temperature range	Colour
Polyethylene LD	-40 °C...80 °C	Transparent

Ordering data

Order No.	Type	Length	Conductor O.D.	Connection cross-section	Qty.
1891810000	TM 0/18 TWIN HF/HB	18 mm	1.3 - 2.6 mm	0.22 - 1.5 mm²	500
1891780000	TM 1/18 TWIN HF/HB	18 mm	2.4 - 4 mm	1.5 - 2.5 mm²	500

CLI T

Technical data

Material	Temperature range	Fire class acc. to UL 94	Colour
PVC	-30 °C...80 °C	V-0	Transparent

Ordering data

Order No.	Type	Length	Conductor O.D.	Connection cross-section	Qty.
1764060000	CLI T 02-12	12 mm	1.3 - 3 mm	0.22 - 1.5 mm²	200
1764070000	CLI T 02-15	15 mm	1.3 - 3 mm	0.22 - 1.5 mm²	200
1764140000	CLI T 02-18	18 mm	1.3 - 3 mm	0.22 - 1.5 mm²	200
1764150000	CLI T 02-20	20 mm	1.3 - 3 mm	0.22 - 1.5 mm²	200
1889580000	CLI T 02-30	30 mm	1.3 - 3 mm	0.22 - 1.5 mm²	200
1764190000	CLI T 1-12	12 mm	2.5 - 5 mm	0.75 - 6 mm²	200
1764200000	CLI T 1-15	15 mm	2.5 - 5 mm	0.75 - 6 mm²	200
1764210000	CLI T 1-18	18 mm	2.5 - 5 mm	0.75 - 6 mm²	200
1764220000	CLI T 1-20	20 mm	2.5 - 5 mm	0.75 - 6 mm²	200
1889560000	CLI T 1-30	30 mm	2.5 - 5 mm	0.75 - 6 mm²	200
1764230000	CLI T 2-12	12 mm	4 - 10 mm	4 - 35 mm²	100
1764240000	CLI T 2-15	15 mm	4 - 10 mm	4 - 35 mm²	100
1764250000	CLI T 2-18	18 mm	4 - 10 mm	4 - 35 mm²	100
1764260000	CLI T 2-20	20 mm	4 - 10 mm	4 - 35 mm²	100
1889570000	CLI T 2-30	30 mm	4 - 10 mm	4 - 35 mm²	100
1764270000	CLI T 3-12	12 mm	8 - 16 mm	25 - 75 mm²	100
1764280000	CLI T 3-15	15 mm	8 - 16 mm	25 - 75 mm²	100
1764290000	CLI T 3-18	18 mm	8 - 16 mm	25 - 75 mm²	100
1764300000	CLI T 3-20	20 mm	8 - 16 mm	25 - 75 mm²	100
1889550000	CLI T 3-30	30 mm	8 - 16 mm	25 - 75 mm²	100

CLI T TM sleeve

Technical data

Material	Temperature range	Fire class acc. to UL 94	Colour
PVC	-30 °C...60 °C	V-0	Transparent

Ordering data

Order No.	Type	Length	Width	Qty.
1763270000	CLI TM 10-33	33 mm	6 mm	100
1763280000	CLI TM 20-33	33 mm	11.3 mm	100
1763390000	CLI TM 20-66	66 mm	11.3 mm	50

Accessories

Order No.	Type	Length	Width	Number	Qty.
1600740000	CLI F 1-20 WS/GE	20 mm	4 mm	594	10
1764050000	CLI F 2-17.5 WS/GE	17.5 mm	9 mm	352	10
1718431044	TM-I 18 MC NE WS	18 mm	4 mm	64	320
1674760000	ESG 9/17 K MC NE WS	17 mm	9 mm	40	200

TM sleeve

Technical data

Material	Temperature range	Fire class acc. to UL 94	Colour
PVC	-40 °C...80 °C	V-0	Transparent

Ordering data

Order No.	Type	Length	Conductor O.D.	Connection cross-section	Qty.
1798650000	TM 200/15 V0	15 mm	1 - 1.5 mm	0.22 - 1 mm²	1000
1798640000	TM 201/12 V0	12 mm	1.5 - 2.5 mm	0.25 - 1.5 mm²	1000
1798620000	TM 201/15 V0	15 mm	1.5 - 2.5 mm	0.25 - 1.5 mm²	1000
1798600000	TM 201/18 V0	18 mm	1.5 - 2.5 mm	0.25 - 1.5 mm²	1000
1798580000	TM 201/20 V0	20 mm	1.5 - 2.5 mm	0.25 - 1.5 mm²	1000
1507060000	TM 201/23 V0	23 mm	1.5 - 2.5 mm	0.25 - 1.5 mm²	1000
1874850000	TM 201/30 V0	30 mm	1.5 - 2.5 mm	0.25 - 1.5 mm²	500
1798560000	TM 202/12 V0	12 mm	2 - 4 mm	0.5 - 2.5 mm²	1000
1798540000	TM 202/15 V0	15 mm	2 - 4 mm	0.5 - 2.5 mm²	1000
1798530000	TM 202/18 V0	18 mm	2 - 4 mm	0.5 - 2.5 mm²	1000
1798520000	TM 202/20 V0	20 mm	2 - 4 mm	0.5 - 2.5 mm²	1000
1507070000	TM 202/23 V0	23 mm	2 - 4 mm	0.5 - 2.5 mm²	1000
1874760000	TM 202/30 V0	30 mm	2 - 4 mm	0.5 - 2.5 mm²	500
1798510000	TM 203/12 V0	12 mm	4 - 7 mm	2.5 - 10 mm²	500
1798490000	TM 203/15 V0	15 mm	4 - 7 mm	2.5 - 10 mm²	500
1798480000	TM 203/18 V0	18 mm	4 - 7 mm	2.5 - 10 mm²	500
1798470000	TM 203/20 V0	20 mm	4 - 7 mm	2.5 - 10 mm²	500
1507080000	TM 203/23 V0	23 mm	4 - 7 mm	2.5 - 10 mm²	500
1874770000	TM 203/30 V0	30 mm	4 - 7 mm	2.5 - 10 mm²	200
1806180000	TM 204/12 V0	12 mm	6 - 10 mm	6 - 16 mm²	500
1806240000	TM 204/15 V0	15 mm	6 - 10 mm	6 - 16 mm²	500
1806300000	TM 204/18 V0	18 mm	6 - 10 mm	6 - 16 mm²	500
1806360000	TM 204/20 V0	20 mm	6 - 10 mm	6 - 16 mm²	500
1507090000	TM 204/23 V0	23 mm	6 - 10 mm	6 - 16 mm²	500
1874780000	TM 204/30 V0	30 mm	6 - 10 mm	6 - 16 mm²	200
1806190000	TM 205/12 V0	12 mm	10 - 14 mm	16 - 35 mm²	200
1806250000	TM 205/15 V0	15 mm	10 - 14 mm	16 - 35 mm²	200
1806310000	TM 205/18 V0	18 mm	10 - 14 mm	16 - 35 mm²	200
1806370000	TM 205/20 V0	20 mm	10 - 14 mm	16 - 35 mm²	200
1507100000	TM 205/23 V0	23 mm	10 - 14 mm	16 - 35 mm²	200
1874790000	TM 205/30 V0	30 mm	10 - 14 mm	16 - 35 mm²	200
1806200000	TM 206/12 V0	12 mm	14 - 22 mm	35 - 120 mm²	200
1806260000	TM 206/15 V0	15 mm	14 - 22 mm	35 - 120 mm²	200
1806320000	TM 206/18 V0	18 mm	14 - 22 mm	35 - 120 mm²	200
1806380000	TM 206/20 V0	20 mm	14 - 22 mm	35 - 120 mm²	200
1507110000	TM 206/23 V0	23 mm	14 - 22 mm	35 - 120 mm²	200
1874800000	TM 206/30 V0	30 mm	14 - 22 mm	35 - 120 mm²	100
1806210000	TM 207/12 V0	12 mm	22 - 30 mm	120 - 240 mm²	50
1806270000	TM 207/15 V0	15 mm	22 - 30 mm	120 - 240 mm²	50
1806330000	TM 207/18 V0	18 mm	22 - 30 mm	120 - 240 mm²	50
1806390000	TM 207/20 V0	20 mm	22 - 30 mm	120 - 240 mm²	50
1507120000	TM 207/23 V0	23 mm	22 - 30 mm	120 - 240 mm²	50
1874820000	TM 207/30 V0	30 mm	22 - 30 mm	120 - 240 mm²	50
1866680000	TMX 30 V0	30 mm	10 - 317 mm	16 - 150 mm²	400

ELS MultiCard
Resilient, inlay tags

A resilient interior for cable markers or tag carriers

Optimally designed for use in WKM cable markers or SchT 5-type tag carriers, the ELS tags meet the highest requirements where prominent identification of cables and terminal strips is needed. The high-quality markers are made of polyamide 66. This guarantees a constant, high-quality appearance and clear and simple presentation of information even under the extremely demanding conditions where oil, water or other fluids are present.

ELS inlay tags – the benefits to you

- Perfectly fitting: in flat form they are the perfect inserts for WKM or SchT 5-type
- Resistant: indestructible material characteristics ensure consistent marking quality

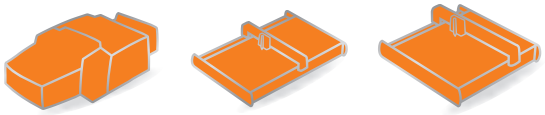

PrintJet ADVANCED | Plotter MCP Plus 2 | Plotter MCP Basic 2

The ELS 16/40 or ELS 6/30-type labels give maximum marking quality when they are inserted into WKM cable markers and fastened with cable ties.

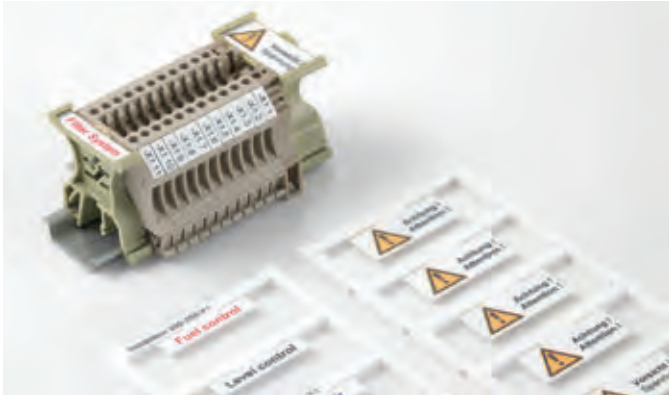

The ELS 16/40 and ELS 7/40 can be used for group identification by being positioned at the top of the carrier.

Halogen Free

Technical data

Material	Polyamide 66, halogen-free
UL 94 flammability rating	V2
Temperature range	–40 °C to 100 °C

Ordering data

Colour	International colour code colours, not contained in the range, are available on request.
Special printing	Specify special printing and colours per using the M-Print® PRO software.
Printing	Black or colour
Possible printing systems	PrintJet ADVANCED, PrintJet PRO, MCP Plus 2, MCP Basic 2
Notes on mounting	ELS 6/30: WKM 8/30 (1631910000) ELS 16/40: WKM 18/43 (1610700000)
Minimum order quantity	1 pack = 5 cards

ELS MultiCard

	ELS 6/30	ELS 16/40
	6 mm	16 mm

Technical data

Material	Polyamide 66	Polyamide 66
Fire class acc. to UL 94	V-2	V-2
Ambient temperature (operational)	-40 °C...100 °C	-40 °C...100 °C
Application/manufacturer		
Width	6 mm	16 mm
Length	30 mm	40 mm

Ordering data

MultiCard Blank						
Yellow	●	Type	Qty.	Order No.	Type	Qty.	Order No.
White	❍	ELS 6/30 MC NE GE	80	1045580000	ELS 16/40 MC NE GE	40	1045630000
MultiCard custom printing		ELS 6/30 MC NE WS	80	1045570000	ELS 16/40 MC NE WS	40	1045620000
To customer specification		ELS 6/30 MC SDR	16	1045660000	ELS 16/40 MC SDR	8	1045690000
MultiCard Blank, self adhesive							
White	❍	ELS 6/30 K MC NE WS	80	1191390000	ELS 16/40 K MC NE WS	40	1411800000

Accessories

Type	Qty.	Order No.	Type	Qty.	Order No.
EM 8/30	50	1806120000	SCHT 5	20	0292460000
WKM 8/30	50	1631910000	WKM 18/43	50	1610700000

Technical drawing / application

WKM – Cable marker
Firm hold for all cable diameters

The robust label holder for cable tie assembly

The halogen-free WKM transparent pocket gives excellent protection against outside influences. Thanks to its secure cable-tie lock-in ability, it is suitable for almost all conductor cross sections.
The previously marked tags are simply placed in the WKH holder and secured with the closing clip. The WKM cable marker is the right solution when it comes to being highly efficient at the labelling site.

WKM cable marker – the benefits to you

- Individual labelling of paper and polyester labels can take place using a normal office printer
- The robust design in conjunction with the MultiCard tags guarantees excellent protection against outside influences

Paper and polyester labels
The following options are available:
WKM 8/20 + ESO 8/20
WKM 8/30 + ESO 7
WKM 18/43 + ESO 5

MultiCard marker
The following options are available:
WKM 8/20 + ESG 7/20
WKM 8/30 + ELS 6/30
WKM 18/43 + ELS 16/40

The cable tie assembly offers secure attachment for almost all conductor cross sections and high durability, especially under high mechanical demand.

Halogen Free

Technical data

Material	Polypropylene
UL 94 flammability rating	HB
Min. temperature, continuous	– 40 °C
Max. temperature, continuous	80 °C
Material colour	transparent

WKM

	WKM 8/20	8 mm	WKM 8/30	8 mm

Technical data

Material	Polypropylene	Polypropylene
Fire class acc. to UL 94	HB	HB
Ambient temperature (operational)	-40 °C...80 °C	-40 °C...80 °C
Application/manufacturer		
Width	8 mm	8 mm
Length	20 mm	30 mm

Ordering data

MultiCard Blank	Type	Qty.	Order No.	Type	Qty.	Order No.
Transparent	WKM 8/20	50	1753490000	WKM 8/30	50	1631910000

Accessories

	Type	Qty.	Order No.	Type	Qty.	Order No.
MultiCard						
	ESG 7/20 SIRIUS MC NE WS	200	1736181044	ESG 7/20 SIRIUS MC NE WS	200	1736181044
	ESG 7/20 SIRIUS MC NE TU	200	1736181696	ELS 6/30 MC NE GE	80	1045580000
	ESG 7/20 SIRIUS MC NE GE	200	1736181687	ELS 6/30 MC NE WS	80	1045570000
DIN A4 sheets						
Paper	ESO 8/20 DIN A4 GE	10	1919900000	ESO 7 DIN A4 WS	10	1607720000
Polyester	ESO 8/20 P DIN A4 WS	10	1919870000	ESO 7 P DIN A4 GE	10	1670400000
Polyester	ESO 8/20 P DIN A4 GE	10	1919880000	ESO 7 P DIN A4 WS	10	1670390000
Paper	ESO 8/20 DIN A4 WS	10	1919890000	ESO 7 DIN A4 GE	10	1634780000
MultiMark						
	ELS 8/20 MM GE	3000	2005240000	ELS 6/30 MM GE	3000	2010620000
	ELS 8/20 MM WS	3000	2005180000	ELS 6/30 MM WS	3000	2009980000
Markers						
				THM ESO 7 PA WS	1	1339570000
				THM ESO 7 PA GE	1	1339580000

Technical drawing / application

WKM – transparent sleeve for cable tie installation

WKM

WKM 18/43 | **18 mm**

Technical data

Material	Polypropylene
Fire class acc. to UL 94	HB
Ambient temperature (operational)	-40 °C...80 °C
Application/manufacturer	
Width	18 mm
Length	43 mm

Ordering data

MultiCard Blank	Type	Qty.	Order No.
Transparent	WKM 18/43	50	**1610700000**

Accessories

MultiCard	Type	Qty.	Order No.
	ELS 16/40 MC NE GE	40	**1045630000**
	ELS 16/40 MC NE WS	40	**1045620000**
DIN A4 sheets			
Paper	ESO 5 DIN A4 WS	10	**1607710000**
Polyester	ESO 5 P DIN A4 WS	10	**1670370000**
Polyester	ESO 5 P DIN A4 GE	10	**1670380000**
Paper	ESO 5 DIN A4 GE	10	**1631350000**
MultiMark			
	ELS 16/40 MM GE	2000	**2005260000**
	ELS 16/40 MM WS	2000	**2005200000**
Markers			

Technical drawing / application

2B32

Individual processing

The professional system for every standard

PrintJet ADVANCED

Superior components in a comprehensive product line

Our labelling system allows you to label with precision and speed – without losing track.
Our completely matched line of materials, sizes and mounting options cover solutions for all of your particular operational needs.
The systematic use of PrintJet ADVANCED and the M-Print®-PRO-software enables you to custom design and process facility labelling for all of your system components. The result is a consistently outstanding marking system.

A special punched-out hole in the SFX-M 11/60 enables use with steel cable ties, and with plastic cable ties with the SFX-M 11/60-5.

The benefits for you

- Quality: durable materials for extreme conditions
- Customised: perfectly matched system components provide the best variety
- Efficient: tailor-made solutions from a single source
- Professional: in-house control of all marking processes
- Flexible: Excellent assembly characteristics

The universal inlay is designed to accept eight different tag types and is particularly suitable for printing small batch jobs.

Technical specifications

Tag material	Micro etching steel 1.4301 (ST) or chromal coated aluminium (AL)
Temperature range	–55 °C to +130 °C
Thickness	0.5 mm
Primer	100 impregnated cloths and hermetically sealed
Update kit	PrintJet ADVANCED enables you to print metal markers as standard. We offer an update kit for customers who also want to print metal markers with their PrintJet PRO. The PrintJet PRO's firmware ensures that MetalliCards are processed properly. Available for PrintJet PROs, from delivery date July 2010, with serial number 3653 (last 4 digits) and higher.

MetalliCard

	SFX-M 11/60-5	60 mm	SFX-M 11/60	60 mm

Technical data

Ambient temperature (operational)	-55 °C...130 °C	-55 °C...130 °C
Width	60 mm	60 mm
Length	11 mm	11 mm
Cable tie passage	Flat	Raised
Diameter		

Ordering data

MetalliCard Blank	Type	Qty.	Order No.	Type	Qty.	Order No.
Micro-etched stainless steel 1.4301 (ST)	SFX-M 11/60-5 ST	50	1422570000	SFX-M 11/60 ST	50	1327790000
Chromal coated aluminium (AL)	SFX-M 11/60-5 AL	50	1422560000	SFX-M 11/60 AL	50	1327780000
MetalliCard custom printing						
Micro-etched stainless steel 1.4301 (ST)				SFX-M 11/60 ST SDR	1	1474430000
Chromal coated aluminium (AL)	SFX-M 11/60-5 AL SDR	1	1474440000			

Accessories

	Type	Qty.	Order No.	Type	Qty.	Order No.
Primer for pretreatment	PRIMER CC-M	100	2068020000	PRIMER CC-M	100	2068020000
Inlay	INLAY SFX-M 11/60	1	1341110000	INLAY SFX-M 11/60	1	1341110000
Inlay	INLAY CC-M UNIVERSAL	1	1341120000	INLAY CC-M UNIVERSAL	1	1341120000

Technical drawing / application

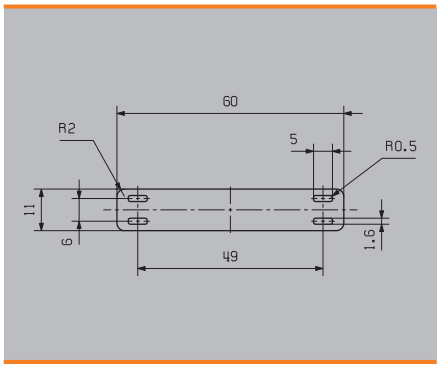

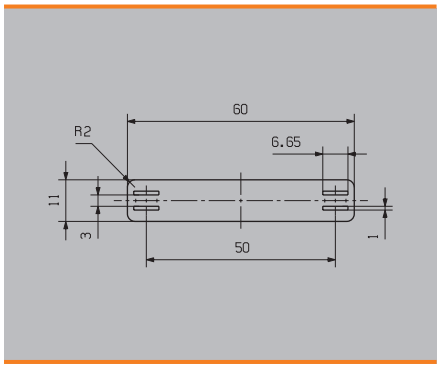

MetalliCard - individual processing

MetalliCard	SFX-M 17/60-5	60 mm	SFX-M 12/40-5	40 mm

Technical data

Ambient temperature (operational)	-55 °C...130 °C	-55 °C...130 °C
Width	60 mm	40 mm
Length	17 mm	12 mm
Cable tie passage	Flat	Flat
Diameter		

Ordering data

MetalliCard Blank	Type	Qty.	Order No.	Type	Qty.	Order No.
Micro-etched stainless steel 1.4301 (ST)	SFX-M 17/60-5 ST	50	1500270000	SFX-M 12/40-5 ST	50	1500240000
Chromal coated aluminium (AL)	SFX-M 17/60-5 AL	50	1500250000	SFX-M 12/40-5 AL	50	1500230000
MetalliCard custom printing						
Micro-etched stainless steel 1.4301 (ST)	SFX-M 17/60-5 ST SDR	1	1505240000	SFX-M 12/40-5 ST SDR	1	1505220000
Chromal coated aluminium (AL)	SFX-M 17/60-5 AL SDR	1	1505230000	SFX-M 12/40-5 AL SDR	1	1505210000

Accessories

	Type	Qty.	Order No.	Type	Qty.	Order No.
Primer for pretreatment	PRIMER CC-M	100	2068020000	PRIMER CC-M	100	2068020000
Inlay	INLAY SFX-M 17/60	1	1500330000	INLAY SFX-M 11/60	1	1341110000
Inlay				INLAY CC-M UNIVERSAL	1	1341120000

Technical drawing / application

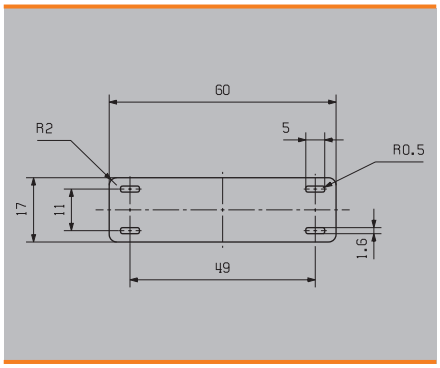

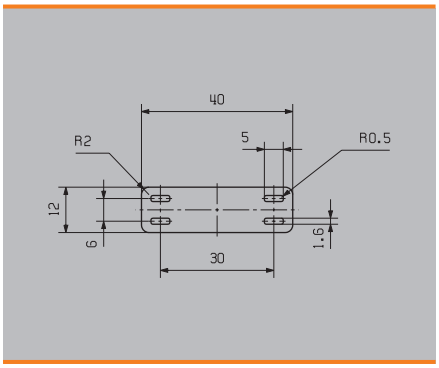

Weidmüller
Inlay CC-Metall
CC-M 85x54
Printer PrintJet ADVANCED
Year
Type
Material
2012
MetalliCard
Aluminium
Attention
Stop
New
On
Systemised Marking
1234

TM-I, WM, and SFX MultiMark wire and cable markers

Make your connections visible

Process reliability: TM-I

TM-I insert tags have a guide tab which enables them to slide easily into the transparent sleeves. Once the label is in place, the tab can be snapped off at the predetermined break point. Your benefits: large quantities can be efficiently pre-assembled in a single step. This saves both time and money.

Un-detachable: WM

Our closed, un-detachable markers are mounted without the need for additional tools. The cable is simply threaded through the openings at both ends before wiring takes place. The inherent tension of the material fixes the marker in place.

Highly flexible: SFX

SFX markers are the preferred choice for identifying cables if you opt for a classic cable tie solution. Cables do not by nature always run in a straight line. The material used in SFX markers addresses this circumstance with highly flexible polyurethane. The marker follows every curve of the cable and latches on without resistance.

Your benefits with MultiMark

- Compact, practical range of products
- Quickly printed and assembled
- Reliable identification of your connections
- Excellent material properties

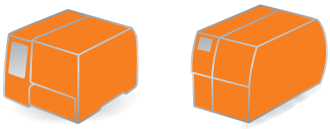

THM MMP THM Plus M

TM-I: Plug-in wire markers – easy to install before and after the sleeve assembly

WM: Wire markers installed without tools – simply edit your projects on a computer then print on a reel

SFX: Highly flexible cable markers – determine the maximum diameter from the length of the cable tie

Halogen Free

Technical data TM-I, WM, SFX

Material	Polyester
UL 94 flammability rating	HB
Temperature range	-40 °C to 150 °C
Ribbon	RIBBON MM 80/360 SW (2005080000)
Possible printing systems	THM MMP, THM Plus M

Conductor markers TM-I

Technical data

Material	Temperature range	Fire class acc. to UL 94	Adhesive	Order No.	Type
Polyester	-40...150 °C	HB		2005080000	RIBBON MM 80/360 SW

Ordering data

Order No.	Type		Colour	Length	Width	Qty.
2005890000	TM-I 12 MM BL	●	Blue	12 mm	4 mm	2000
2005550000	TM-I 12 MM GE	●	Yellow	12 mm	4 mm	2000
2005730000	TM-I 12 MM RT	●	Red	12 mm	4 mm	2000
2005440000	TM-I 12 MM WS	❍	White	12 mm	4 mm	2000
2005910000	TM-I 15 MM BL	●	Blue	15 mm	4 mm	2000
2005580000	TM-I 15 MM GE	●	Yellow	15 mm	4 mm	2000
2005760000	TM-I 15 MM RT	●	Red	15 mm	4 mm	2000
2005450000	TM-I 15 MM WS	❍	White	15 mm	4 mm	2000
2005930000	TM-I 18 MM BL	●	Blue	18 mm	4 mm	2000
2005610000	TM-I 18 MM GE	●	Yellow	18 mm	4 mm	2000
2005790000	TM-I 18 MM RT	●	Red	18 mm	4 mm	2000
2005470000	TM-I 18 MM WS	❍	White	18 mm	4 mm	2000
2005950000	TM-I 20 MM BL	●	Blue	20 mm	4 mm	2000
2005640000	TM-I 20 MM GE	●	Yellow	20 mm	4 mm	2000
2005820000	TM-I 20 MM RT	●	Red	20 mm	4 mm	2000
2005490000	TM-I 20 MM WS	❍	White	20 mm	4 mm	2000
2005970000	TM-I 23 MM BL	●	Blue	23 mm	4 mm	2000
2005670000	TM-I 23 MM GE	●	Yellow	23 mm	4 mm	2000
2005850000	TM-I 23 MM RT	●	Red	23 mm	4 mm	2000
2005510000	TM-I 23 MM WS	❍	White	23 mm	4 mm	2000
2005990000	TM-I 30 MM BL	●	Blue	30 mm	4 mm	2000
2005700000	TM-I 30 MM GE	●	Yellow	30 mm	4 mm	2000
2005870000	TM-I 30 MM RT	●	Red	30 mm	4 mm	2000
2005530000	TM-I 30 MM WS	❍	White	30 mm	4 mm	2000

Conductor markers WM

Technical data

Material	Temperature range	Fire class acc. to UL 94	Adhesive	Order No.	Type
Polyester	-40...150 °C	HB		2005080000	RIBBON MM 80/360 SW

Ordering data

Order No.	Type		Colour	Length	Width	Qty.
2006250000	WM 0/12 1.0-2.0 MM GE	●	Yellow	23 mm	3.5 mm	2000
2006170000	WM 0/12 1.0-2.0 MM WS	❍	White	23 mm	3.5 mm	2000
2006090000	WM 0/21 1.0-2.0 MM GE	●	Yellow	32 mm	3.5 mm	2000
2006010000	WM 0/21 1.0-2.0 MM WS	❍	White	32 mm	3.5 mm	2000
2006410000	WM 0/6 1.0-2.0 MM GE	●	Yellow	17 mm	3.5 mm	2000
2006330000	WM 0/6 1.0-2.0 MM WS	❍	White	17 mm	3.5 mm	2000
2006270000	WM 1/12 2.0-3.5 MM GE	●	Yellow	23 mm	4.8 mm	2000
2006190000	WM 1/12 2.0-3.5 MM WS	❍	White	23 mm	4.8 mm	2000
2006110000	WM 1/21 2.0-3.5 MM GE	●	Yellow	32 mm	4.8 mm	2000
2006030000	WM 1/21 2.0-3.5 MM WS	❍	White	32 mm	4.8 mm	2000
2006430000	WM 1/6 2.0-3.5 MM GE	●	Yellow	17 mm	4.8 mm	2000
2006350000	WM 1/6 2.0-3.5 MM WS	❍	White	17 mm	4.8 mm	2000
2006290000	WM 2/12 3.5-5.0 MM GE	●	Yellow	23 mm	6.4 mm	2000
2006210000	WM 2/12 3.5-5.0 MM WS	❍	White	23 mm	6.4 mm	2000
2006130000	WM 2/21 3.5-5.0 MM GE	●	Yellow	32 mm	6.4 mm	2000
2006050000	WM 2/21 3.5-5.0 MM WS	❍	White	32 mm	6.4 mm	2000
2006450000	WM 2/6 3.5-5.0 MM GE	●	Yellow	17 mm	6.4 mm	2000
2006370000	WM 2/6 3.5-5.0 MM WS	❍	White	17 mm	6.4 mm	2000
2006310000	WM 3/12 5.0-8.0 MM GE	●	Yellow	23 mm	10 mm	2000
2006230000	WM 3/12 5.0-8.0 MM WS	❍	White	23 mm	10 mm	2000
2006150000	WM 3/21 5.0-8.0 MM GE	●	Yellow	32 mm	10 mm	2000
2006070000	WM 3/21 5.0-8.0 MM WS	❍	White	32 mm	10 mm	2000
2006470000	WM 3/6 5.0-8.0 MM GE	●	Yellow	17 mm	10 mm	2000
2006390000	WM 3/6 5.0-8.0 MM WS	❍	White	17 mm	10 mm	2000

Cable markers SFX

Technical data

Material	Temperature range	Fire class acc. to UL 94	Adhesive	Order No.	Type
Polyurethane	-40...90 °C	HB		2005080000	RIBBON MM 80/360 SW

Ordering data

Order No.	Type		Colour	Length	Width	Qty.
2005380000	SFX 9/24 MM GE	●	Yellow	24 mm	9 mm	1000
2005320000	SFX 9/24 MM WS	❍	White	24 mm	9 mm	1000
2005400000	SFX 11/60 MM GE	●	Yellow	60 mm	11 mm	1000
2005340000	SFX 11/60 MM WS	❍	White	60 mm	11 mm	1000
2005420000	SFX 30/60 MM GE	●	Yellow	60 mm	30 mm	300
2005360000	SFX 30/60 MM WS	❍	White	60 mm	30 mm	300

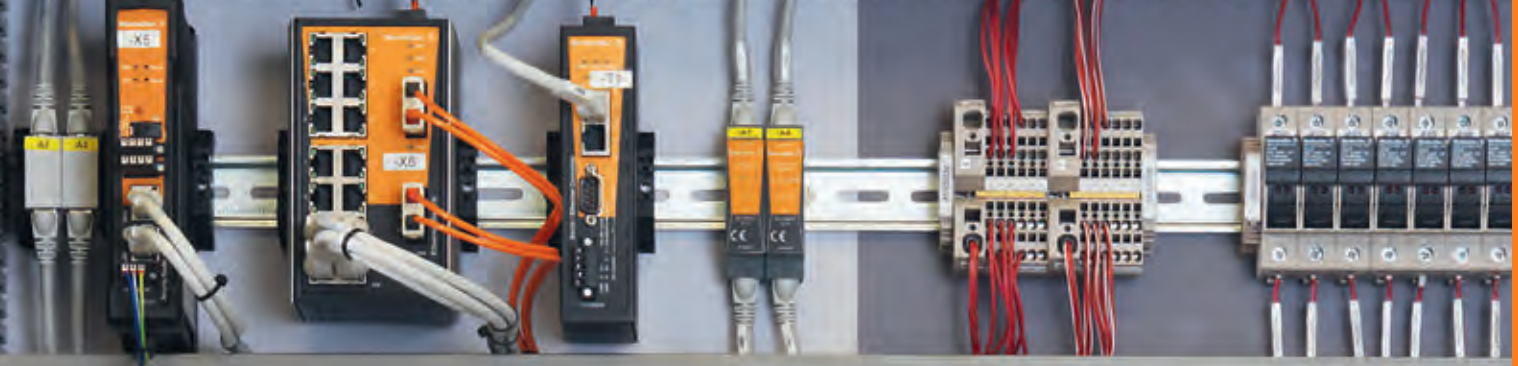

MulitMark – shrink sleeves
For you at a glance

Identify cables and wires in confined spaces

For a long time now, clear and durable identification of your plant's modules, electrical components, wires and cables has not only been an absolute must but also highly important with respect to maintenance and troubleshooting. Labelling using shrink sleeves is one very common way of identifying wires and cables.
For example, shrink sleeves are actually the most common form of marker used for identification purposes in the railway industry. In this industry, an essential consideration is the stringent requirements regarding flammability characteristics. With our shrink sleeves, we meet the need for a labelling solution that satisfies the most stringent requirements set down in the CEN/TS 45545-2 HL3 standard.
In applications where space is at apremium, shrink sleeves offer a compact marking solution, for example when wiring multi pole plug in. Our new endless shrink sleeves offer customised design opportunities.

The benefits of our MulitMark shrink sleeves

- Configure markers the simple way with the M-Print® PRO labelling software
- Convenient assembly due to perforation of endless markers
- Time-saving installation thanks to simple handling
- Comply with common standards by using resistant markers

Halogen Free

Technical data HS-HF, HSS-HF, HSS-HF EL

Material	Polyolefin, halogenfrei
Flammability Rating	ASTM D 635-HB
	EN 45545-2 HL 3
Temperature range	–55 °C to 105 °C
Rate of shrinkage	2:1
Recom. shrink temperature	90 °C
Ribbon organised	2448880000, RIBBON MM-HS 60/300 SW
Ribbon endless	1426210000, RIBBON HSS HF EL 40/300

Technical data HS, HSS EL

Material	Polyolefin
Flammability rating	UL 224 VW-1
Temperature range	–55 °C to 135 °C
Rate of shrinkage	3:1
Recom. shrink temperature	90 °C
Ribbon organised	2448880000, RIBBON MM-HS 60/300 SW
Ribbon endless	1426210000, RIBBON HSS HF EL 40/300

THM MMP THM Plus M THM TwinMark

All materials are printed in a customised manner in combination with the intuitive M-Print® PRO labelling software.

Once you have set the desired marker length in the software, the perforations are automatically added by the perforating appliance.

The shrink sleeve's oval contour makes mounting the marker on the cable easier. This saves time while identifying wires and cables.

HS... 25,4 mm

Technical data

Material	Rate of shrinkage	Temperature range	recom. Shrinks.	Order No.	Type
Polyolefine	3:1	-55...135 °C	90 °C	2448880000	RIBBON MM-HS 60/300 SW

Ordering data

Order No.	Type		Colour	Length	Conductor O.D.	Qty.
2437470000	HS 0.8-2.4/25 MM W	❍	White	25.4 mm	0.8 - 2.4 mm	2000
2437480000	HS 0.8-2.4/25 MM Y	●	Yellow	25.4 mm	0.8 - 2.4 mm	2000
2437510000	HS 1.0-3.2/25 MM W	❍	White	25.4 mm	1 - 3.2 mm	2000
2437520000	HS 1.0-3.2/25 MM Y	●	Yellow	25.4 mm	1 - 3.2 mm	2000
2437550000	HS 1.6-4.8/25 MM W	❍	White	25.4 mm	1.6 - 4.8 mm	2000
2437560000	HS 1.6-4.8/25 MM Y	●	Yellow	25.4 mm	1.6 - 4.8 mm	2000
2437630000	HS 2.1-6.4/25 MM W	❍	White	25.4 mm	2.1 - 6.4 mm	2000
2437640000	HS 2.1-6.4/25 MM Y	●	Yellow	25.4 mm	2.1 - 6.4 mm	2000
2437670000	HS 3.2-9.5/25 MM W	❍	White	25.4 mm	3.2 - 9.5 mm	1000
2437680000	HS 3.2-9.5/25 MM Y	●	Yellow	25.4 mm	3.2 - 9.5 mm	1000
2437710000	HS 4.2-12.7/25 MM W	❍	White	25.4 mm	4.2 - 12.7 mm	1000
2437720000	HS 4.2-12.7/25 MM Y	●	Yellow	25.4 mm	4.2 - 12.7 mm	1000
2437750000	HS 6.4-19.1/25 MM W	❍	White	25.4 mm	6.4 - 19.1 mm	800
2437760000	HS 6.4-19.1/25 MM Y	●	Yellow	25.4 mm	6.4 - 19.1 mm	800
2437790000	HS 8.5-25.4/25 MM W	❍	White	25.4 mm	8.5 - 25.4 mm	400
2437800000	HS 8.5-25.4/25 MM Y	●	Yellow	25.4 mm	8.5 - 25.4 mm	400
2437590000	HS 12.7-38.1/25 MM W	❍	White	25.4 mm	12.7 - 38.1 mm	200
2437600000	HS 12.7-38.1/25 MM Y	●	Yellow	25.4 mm	12.7 - 38.1 mm	200

HS... 50,8 mm

Technical data

Material	Rate of shrinkage	Temperature range	recom. Shrinks.	Order No.	Type
Polyolefine	3:1	-55...135 °C	90 °C	2448880000	RIBBON MM-HS 60/300 SW

Ordering data

Order No.	Type		Colour	Length	Conductor O.D.	Qty.
2437490000	HS 0.8-2.4/50 MM W	❍	White	50.8 mm	0.8 - 2.4 mm	1000
2437500000	HS 0.8-2.4/50 MM Y	●	Yellow	50.8 mm	0.8 - 2.4 mm	1000
2437530000	HS 1.0-3.2/50 MM W	❍	White	50.8 mm	1 - 3.2 mm	1000
2437540000	HS 1.0-3.2/50 MM Y	●	Yellow	50.8 mm	1 - 3.2 mm	1000
2437570000	HS 1.6-4.8/50 MM W	❍	White	50.8 mm	1.6 - 4.8 mm	1000
2437580000	HS 1.6-4.8/50 MM Y	●	Yellow	50.8 mm	1.6 - 4.8 mm	1000
2437650000	HS 2.1-6.4/50 MM W	❍	White	50.8 mm	2.1 - 6.4 mm	1000
2437660000	HS 2.1-6.4/50 MM Y	●	Yellow	50.8 mm	2.1 - 6.4 mm	1000
2437690000	HS 3.2-9.5/50 MM W	❍	White	50.8 mm	3.2 - 9.5 mm	500
2437700000	HS 3.2-9.5/50 MM Y	●	Yellow	50.8 mm	3.2 - 9.5 mm	500
2437730000	HS 4.2-12.7/50 MM W	❍	White	50.8 mm	4.2 - 12.7 mm	500
2437740000	HS 4.2-12.7/50 MM Y	●	Yellow	50.8 mm	4.2 - 12.7 mm	500
2437770000	HS 6.4-19.1/50 MM W	❍	White	50.8 mm	6.4 - 19.1 mm	400
2437780000	HS 6.4-19.1/50 MM Y	●	Yellow	50.8 mm	6.4 - 19.1 mm	400
2437810000	HS 8.5-25.4/50 MM W	❍	White	50.8 mm	8.5 - 25.4 mm	200
2437820000	HS 8.5-25.4/50 MM Y	●	Yellow	50.8 mm	8.5 - 25.4 mm	200
2437610000	HS 12.7-38.1/50 MM W	❍	White	50.8 mm	12.7 - 38.1 mm	100
2437620000	HS 12.7-38.1/50 MM Y	●	Yellow	50.8 mm	12.7 - 38.1 mm	100

HS-HF 25.4 mm

Technical data

Material	Rate of shrinkage	Temperature range	recom. Shrinks.	Order No.	Type
Polyolefine	2:1	-55...105 °C	90 °C	2448880000	RIBBON MM-HS 60/300 SW

Ordering data

Order No.	Type		Colour	Length	Conductor O.D.	Qty.
2437830000	HS-HF 1.2-2.4/25 MM W	❍	White	25.4 mm	1.2 - 2.4 mm	2000
2437840000	HS-HF 1.2-2.4/25 MM Y	●	Yellow	25.4 mm	1.2 - 2.4 mm	2000
2437870000	HS-HF 1.6-3.2/25 MM W	❍	White	25.4 mm	1.6 - 3.2 mm	2000
2437880000	HS-HF 1.6-3.2/25 MM Y	●	Yellow	25.4 mm	1.6 - 3.2 mm	2000
2437990000	HS-HF 2.4-4.8/25 MM W	❍	White	25.4 mm	2.4 - 4.8 mm	2000
2438000000	HS-HF 2.4-4.8/25 MM Y	●	Yellow	25.4 mm	2.4 - 4.8 mm	2000
2438040000	HS-HF 3.2-6.4/25 MM W	❍	White	25.4 mm	3.2 - 6.4 mm	2000
2438050000	HS-HF 3.2-6.4/25 MM Y	●	Yellow	25.4 mm	3.2 - 6.4 mm	2000
2438090000	HS-HF 4.8-9.5/25 MM W	❍	White	25.4 mm	4.8 - 9.5 mm	1000
2438100000	HS-HF 4.8-9.5/25 MM Y	●	Yellow	25.4 mm	4.8 - 9.5 mm	1000
2438140000	HS-HF 6.4-12.7/25 MM W	❍	White	25.4 mm	6.4 - 12.7 mm	1000
2438150000	HS-HF 6.4-12.7/25 MM Y	●	Yellow	25.4 mm	6.4 - 12.7 mm	1000
2438190000	HS-HF 9.5-19.1/25 MM W	❍	White	25.4 mm	9.5 - 19.1 mm	800
2438200000	HS-HF 9.5-19.1/25 MM Y	●	Yellow	25.4 mm	9.5 - 19.1 mm	800
2437910000	HS-HF 12.7-25.4/25 MM W	❍	White	25.4 mm	12.7 - 25.4 mm	400
2437920000	HS-HF 12.7-25.4/25 MM Y	●	Yellow	25.4 mm	12.7 - 25.4 mm	400
2437950000	HS-HF 19.5-38.1/25 MM W	❍	White	25.4 mm	19.5 - 38.1 mm	200
2437960000	HS-HF 19.5-38.1/25 MM Y	●	Yellow	25.4 mm	19.5 - 38.1 mm	200

HS-HF 50.8 mm

Technical data

Material	Rate of shrinkage	Temperature range	recom. Shrinks.	Order No.	Type
Polyolefine	2:1	-55...105 °C	90 °C	2448880000	RIBBON MM-HS 60/300 SW

Ordering data

Order No.	Type		Colour	Length	Conductor O.D.	Qty.
2437850000	HS-HF 1.2-2.4/50 MM W	❍	White	50.8 mm	1.2 - 2.4 mm	1000
2437860000	HS-HF 1.2-2.4/50 MM Y	●	Yellow	50.8 mm	1.2 - 2.4 mm	1000
2437890000	HS-HF 1.6-3.2/50 MM W	❍	White	50.8 mm	1.6 - 3.2 mm	1000
2437900000	HS-HF 1.6-3.2/50 MM Y	●	Yellow	50.8 mm	1.6 - 3.2 mm	1000
2438010000	HS-HF 2.4-4.8/50 MM W	❍	White	50.8 mm	2.4 - 4.8 mm	1000
2438020000	HS-HF 2.4-4.8/50 MM Y	●	Yellow	50.8 mm	2.4 - 4.8 mm	1000
2438060000	HS-HF 3.2-6.4/50 MM W	❍	White	50.8 mm	3.2 - 6.4 mm	1000
2438070000	HS-HF 3.2-6.4/50 MM Y	●	Yellow	50.8 mm	3.2 - 6.4 mm	1000
2438110000	HS-HF 4.8-9.5/50 MM W	❍	White	50.8 mm	4.8 - 9.5 mm	500
2438120000	HS-HF 4.8-9.5/50 MM Y	●	Yellow	50.8 mm	4.8 - 9.5 mm	500
2438160000	HS-HF 6.4-12.7/50 MM W	❍	White	50.8 mm	6.4 - 12.7 mm	500
2438170000	HS-HF 6.4-12.7/50 MM Y	●	Yellow	50.8 mm	6.4 - 12.7 mm	500
2438210000	HS-HF 9.5-19.1/50 MM W	❍	White	50.8 mm	9.5 - 19.1 mm	400
2438220000	HS-HF 9.5-19.1/50 MM Y	●	Yellow	50.8 mm	9.5 - 19.1 mm	400
2437930000	HS-HF 12.7-25.4/50 MM W	❍	White	50.8 mm	12.7 - 25.4 mm	200
2437940000	HS-HF 12.7-25.4/50 MM Y	●	Yellow	50.8 mm	12.7 - 25.4 mm	200
2437970000	HS-HF 19.5-38.1/50 MM W	❍	White	50.8 mm	19.5 - 38.1 mm	100
2437980000	HS-HF 19.5-38.1/50 MM Y	●	Yellow	50.8 mm	19.5 - 38.1 mm	100

HSS-HF 25.4 mm

Technical data

Material	Rate of shrinkage	Temperature range	recom. Shrinks.	Order No.	Type
Polyolefine	2:1	-55...105 °C	90 °C	2448880000	RIBBON MM-HS 60/300 SW

Ordering data

Order No.	Type		Colour	Length	Conductor O.D.	Qty.
1961970000	HSS-HF 1/8 1.8-2.8/25Y	●	Yellow	25.4 mm	1.8 - 2.8 mm	10000
1961980000	HSS-HF 3/16 2.8-4.2/25Y	●	Yellow	25.4 mm	2.8 - 4.2 mm	8000
1961990000	HSS-HF 1/4 4.2-5.8/25Y	●	Yellow	25.4 mm	4.2 - 5.8 mm	5000
1962000000	HSS-HF 3/8 5.8-8.0/25Y	●	Yellow	25.4 mm	5.8 - 8 mm	4000
1962010000	HSS-HF 1/2 8.0-11.0/25Y	●	Yellow	25.4 mm	8 - 11 mm	3000
1962020000	HSS-HF 3/4 11.0-17.0/25Y	●	Yellow	25.4 mm	11 - 17 mm	2500
1962030000	HSS-HF 1 17.0-23.0/25Y	●	Yellow	25.4 mm	17 - 23 mm	1500

HSS-HF 50.8 mm

Technical data

Material	Rate of shrinkage	Temperature range	recom. Shrinks.	Order No.	Type
Polyolefine	2:1	-55...105 °C	90 °C	2448880000	RIBBON MM-HS 60/300 SW

Ordering data

Order No.	Type		Colour	Length	Conductor O.D.	Qty.
1961900000	HSS-HF 1/8 1.8-2.8/50Y	●	Yellow	50.8 mm	1.8 - 2.8 mm	5000
1961910000	HSS-HF 3/16 2.8-4.2/50Y	●	Yellow	50.8 mm	2.8 - 4.2 mm	4000
1961920000	HSS-HF 1/4 4.2-5.8/50Y	●	Yellow	50.8 mm	4.2 - 5.8 mm	2500
1961930000	HSS-HF 3/8 5.8-8.0/50Y	●	Yellow	50.8 mm	5.8 - 8 mm	2000
1961940000	HSS-HF 1/2 8.0-11.0/50Y	●	Yellow	50.8 mm	8 - 11 mm	1500
1961950000	HSS-HF 3/4 11.0-17.0/50Y	●	Yellow	50.8 mm	11 - 17 mm	1250
1961960000	HSS-HF 1 17.0-23.0/50Y	●	Yellow	50.8 mm	17 - 23 mm	750

HSS... Endless 13 meters

Technical data

Material	Rate of shrinkage	Temperature range	recom. Shrinks.	Order No.	Type
Polyolefine	3:1	-55...135 °C	90 °C	1426210000	RIBBON HSS HF EL 40/300

Ordering data

Order No.	Type		Colour	Length	Conductor O.D.	Qty.
1489620000	HSS 0.8-2.4 EL W13M	❍	White	13000 mm	0.8 - 2.4 mm	1
1489530000	HSS 0.8-2.4 EL Y13M	●	Yellow	13000 mm	0.8 - 2.4 mm	1
1489630000	HSS 1.0-3.2 EL W13M	❍	White	13000 mm	1 - 3.2 mm	1
1489540000	HSS 1.0-3.2 EL Y13M	●	Yellow	13000 mm	1 - 3.2 mm	1
1489640000	HSS 1.6-4.8 EL W13M	❍	White	13000 mm	1.6 - 4.8 mm	1
1489550000	HSS 1.6-4.8 EL Y13M	●	Yellow	13000 mm	1.6 - 4.8 mm	1
1489650000	HSS 2.1-6.4 EL W13M	❍	White	13000 mm	2.1 - 6.4 mm	1
1489560000	HSS 2.1-6.4 EL Y13M	●	Yellow	13000 mm	2.1 - 6.4 mm	1
1489660000	HSS 3.2-9.5 EL W13M	❍	White	13000 mm	3.2 - 9.5 mm	1
1489570000	HSS 3.2-9.5 EL Y13M	●	Yellow	13000 mm	3.2 - 9.5 mm	1
1489670000	HSS 4.2-12.7 EL W13M	❍	White	13000 mm	4.2 - 12.7 mm	1
1489580000	HSS 4.2-12.7 EL Y13M	●	Yellow	13000 mm	4.2 - 12.7 mm	1
1489680000	HSS 6.4-19.1 EL W13M	❍	White	13000 mm	6.4 - 19.1 mm	1
1489590000	HSS 6.4-19.1 EL Y13M	●	Yellow	13000 mm	6.4 - 19.1 mm	1

HSS... Endless 30 meters

Technical data

Material	Rate of shrinkage	Temperature range	recom. Shrinks.	Order No.	Type
Polyolefine	3:1	-55...135 °C	90 °C	1426210000	RIBBON HSS HF EL 40/300

Ordering data

Order No.	Type		Colour	Length	Conductor O.D.	Qty.
1505840000	HSS 0.8-2.4 EL W30M	❍	White	30000 mm	0.8 - 2.4 mm	1
1505760000	HSS 0.8-2.4 EL Y30M	●	Yellow	30000 mm	0.8 - 2.4 mm	1
1505850000	HSS 1.0-3.2 EL W30M	❍	White	30000 mm	1 - 3.2 mm	1
1505770000	HSS 1.0-3.2 EL Y30M	●	Yellow	30000 mm	1 - 3.2 mm	1
1505860000	HSS 1.6-4.8 EL W30M	❍	White	30000 mm	1.6 - 4.8 mm	1
1505780000	HSS 1.6-4.8 EL Y30M	●	Yellow	30000 mm	1.6 - 4.8 mm	1
1505870000	HSS 2.1-6.4 EL W30M	❍	White	30000 mm	2.1 - 6.4 mm	1
1505790000	HSS 2.1-6.4 EL Y30M	●	Yellow	30000 mm	2.1 - 6.4 mm	1
1505880000	HSS 3.2-9.5 EL W30M	❍	White	30000 mm	3.2 - 9.5 mm	1
1505800000	HSS 3.2-9.5 EL Y30M	●	Yellow	30000 mm	3.2 - 9.5 mm	1
1505890000	HSS 4.2-12.7 EL W30M	❍	White	30000 mm	4.2 - 12.7 mm	1
1505810000	HSS 4.2-12.7 EL Y30M	●	Yellow	30000 mm	4.2 - 12.7 mm	1
1505900000	HSS 6.4-19.1 EL W30M	❍	White	30000 mm	6.4 - 19.1 mm	1
1505820000	HSS 6.4-19.1 EL Y30M	●	Yellow	30000 mm	6.4 - 19.1 mm	1
1505910000	HSS 8.5-25.4 EL W30M	❍	White	30000 mm	8.5 - 25.4 mm	1
1505830000	HSS 8.5-25.4 EL Y30M	●	Yellow	30000 mm	8.5 - 25.4 mm	1

HSS-HF... Halogen-free Endless 13 meters

Technical data

Material	Rate of shrinkage	Temperature range	recom. Shrinks.	Order No.	Type
Polyolefine	2:1	-55...105 °C	90 °C	1426210000	RIBBON HSS HF EL 40/300

Ordering data

Order No.	Type		Colour	Length	Conductor O.D.	Qty.
1423330000	HSS-HF 1.2-2.4 EL W13M	❍	White	13000 mm	1.2 - 2.4 mm	1
1423220000	HSS-HF 1.2-2.4 EL Y13M	●	Yellow	13000 mm	1.2 - 2.4 mm	1
1423340000	HSS-HF 1.6-3.2 EL W13M	❍	White	13000 mm	1.6 - 3.2 mm	1
1423230000	HSS-HF 1.6-3.2 EL Y13M	●	Yellow	13000 mm	1.6 - 3.2 mm	1
1423350000	HSS-HF 2.4-4.8 EL W13M	❍	White	13000 mm	2.4 - 4.8 mm	1
1423240000	HSS-HF 2.4-4.8 EL Y13M	●	Yellow	13000 mm	2.4 - 4.8 mm	1
1423360000	HSS-HF 3.2-6.4 EL W13M	❍	White	13000 mm	3.2 - 6.4 mm	1
1423250000	HSS-HF 3.2-6.4 EL Y13M	●	Yellow	13000 mm	3.2 - 6.4 mm	1
1423370000	HSS-HF 4.8-9.5 EL W13M	❍	White	13000 mm	4.8 - 9.5 mm	1
1423260000	HSS-HF 4.8-9.5 EL Y13M	●	Yellow	13000 mm	4.8 - 9.5 mm	1
1423380000	HSS-HF 6.4-12.7 EL W13M	❍	White	13000 mm	6.4 - 12.7 mm	1
1423270000	HSS-HF 6.4-12.7 EL Y13M	●	Yellow	13000 mm	6.4 - 12.7 mm	1

HSS-HF... Halogen-free Endless 10 meters

Technical data

Material	Rate of shrinkage	Temperature range	recom. Shrinks.	Order No.	Type
Polyolefine	2:1	-55...105 °C	90 °C	1426210000	RIBBON HSS HF EL 40/300

Ordering data

Order No.	Type		Colour	Length	Conductor O.D.	Qty.
1423390000	HSS-HF 9.5-19.1 EL W10M	❍	White	10000 mm	9.5 - 19.1 mm	1
1423280000	HSS-HF 9.5-19.1 EL Y10M	●	Yellow	10000 mm	9.5 - 19.1 mm	1
1423410000	HSS-HF 12.7-25.4 EL W10M	❍	White	10000 mm	12.7 - 25.4 mm	1
1423290000	HSS-HF 12.7-25.4 EL Y10M	●	Yellow	10000 mm	12.7 - 25.4 mm	1

HSS-HF... Halogen-free Endless 30 meters

Technical data

Material	Rate of shrinkage	Temperature range	recom. Shrinks.	Order No.	Type
Polyolefine	2:1	-55...105 °C	90 °C	1426210000	RIBBON HSS HF EL 40/300

Ordering data

Order No.	Type		Colour	Length	Conductor O.D.	Qty.
1562840000	HSS-HF 1.2-2.4 EL B30M	●	Blue	30000 mm	1.2 - 2.4 mm	1
1562940000	HSS-HF 1.2-2.4 EL G30M	●	Green	30000 mm	1.2 - 2.4 mm	1
1562740000	HSS-HF 1.2-2.4 EL R30M	●	Red	30000 mm	1.2 - 2.4 mm	1
1513240000	HSS-HF 1.2-2.4 EL W30M	❍	White	30000 mm	1.2 - 2.4 mm	1
1513140000	HSS-HF 1.2-2.4 EL Y30M	●	Yellow	30000 mm	1.2 - 2.4 mm	1
1562850000	HSS-HF 1.6-3.2 EL B30M	●	Blue	30000 mm	1.6 - 3.2 mm	1
1562950000	HSS-HF 1.6-3.2 EL G30M	●	Green	30000 mm	1.6 - 3.2 mm	1
1562750000	HSS-HF 1.6-3.2 EL R30M	●	Red	30000 mm	1.6 - 3.2 mm	1
1513250000	HSS-HF 1.6-3.2 EL W30M	❍	White	30000 mm	1.6 - 3.2 mm	1
1513150000	HSS-HF 1.6-3.2 EL Y30M	●	Yellow	30000 mm	1.6 - 3.2 mm	1
1562870000	HSS-HF 2.4-4.8 EL B30M	●	Blue	30000 mm	2.4 - 4.8 mm	1
1562970000	HSS-HF 2.4-4.8 EL G30M	●	Green	30000 mm	2.4 - 4.8 mm	1
1562770000	HSS-HF 2.4-4.8 EL R30M	●	Red	30000 mm	2.4 - 4.8 mm	1
1513270000	HSS-HF 2.4-4.8 EL W30M	❍	White	30000 mm	2.4 - 4.8 mm	1
1513170000	HSS-HF 2.4-4.8 EL Y30M	●	Yellow	30000 mm	2.4 - 4.8 mm	1
1562880000	HSS-HF 3.2-6.4 EL B30M	●	Blue	30000 mm	3.2 - 6.4 mm	1
1562980000	HSS-HF 3.2-6.4 EL G30M	●	Green	30000 mm	3.2 - 6.4 mm	1
1562780000	HSS-HF 3.2-6.4 EL R30M	●	Red	30000 mm	3.2 - 6.4 mm	1
1513280000	HSS-HF 3.2-6.4 EL W30M	❍	White	30000 mm	3.2 - 6.4 mm	1
1513180000	HSS-HF 3.2-6.4 EL Y30M	●	Yellow	30000 mm	3.2 - 6.4 mm	1
1562890000	HSS-HF 4.8-9.5 EL B 30M	●	Blue	30000 mm	4.8 - 9.5 mm	1
1562990000	HSS-HF 4.8-9.5 EL G 30M	●	Green	30000 mm	4.8 - 9.5 mm	1
1562790000	HSS-HF 4.8-9.5 EL R 30M	●	Red	30000 mm	4.8 - 9.5 mm	1
1513290000	HSS-HF 4.8-9.5 EL W30M	❍	White	30000 mm	4.8 - 9.5 mm	1
1513190000	HSS-HF 4.8-9.5 EL Y30M	●	Yellow	30000 mm	4.8 - 9.5 mm	1
1562900000	HSS-HF 6.4-12.7 EL B30M	●	Blue	30000 mm	6.4 - 12.7 mm	1
1563020000	HSS-HF 6.4-12.7 EL G30M	●	Green	30000 mm	6.4 - 12.7 mm	1
1562800000	HSS-HF 6.4-12.7 EL R30M	●	Red	30000 mm	6.4 - 12.7 mm	1
1513300000	HSS-HF 6.4-12.7 EL W30M	❍	White	30000 mm	6.4 - 12.7 mm	1
1513200000	HSS-HF 6.4-12.7 EL Y30M	●	Yellow	30000 mm	6.4 - 12.7 mm	1
1562920000	HSS-HF 9.5-19.1 EL B30M	●	Blue	30000 mm	9.5 - 19.1 mm	1
1563030000	HSS-HF 9.5-19.1 EL G30M	●	Green	30000 mm	9.5 - 19.1 mm	1
1562820000	HSS-HF 9.5-19.1 EL R30M	●	Red	30000 mm	9.5 - 19.1 mm	1
1513320000	HSS-HF 9.5-19.1 EL W30M	❍	White	30000 mm	9.5 - 19.1 mm	1
1513220000	HSS-HF 9.5-19.1 EL Y30M	●	Yellow	30000 mm	9.5 - 19.1 mm	1
1562930000	HSS-HF 12.7-25.4 EL B30M	●	Blue	30000 mm	12.7 - 25.4 mm	1
1563040000	HSS-HF 12.7-25.4 EL G30M	●	Green	30000 mm	12.7 - 25.4 mm	1
1562830000	HSS-HF 12.7-25.4 EL R30M	●	Red	30000 mm	12.7 - 25.4 mm	1
1513330000	HSS-HF 12.7-25.4EL W30M	❍	White	30000 mm	12.7 - 25.4 mm	1
1513230000	HSS-HF 12.7-25.4EL Y30M	●	Yellow	30000 mm	12.7 - 25.4 mm	1

43 0224 1139
43 0201 1135
14
+24V
89379900000
2V1
2V2
2V3
2V4
2V5
2V6

WriteOn
Cable labels

Tough polyester labels with high elasticity

The WriteOn cable labels are used to label wires and cables up to an outside diameter of 36 mm.
The transparent adhesive strip fixes and protects the printing on the marker surface.

Advantages:

- Quick and easy labelling.
- Marking protected against dirt and abrasion by attaching the transparent adhesive strip
- Available on reels for thermal transfer printers and in DIN A4 sheets for laser printers

THM MMP (for THM WO)

The marking is protected against dirt and abrasion by the transparent strip

Halogen Free

Technical data LM WO

Material	Polyester film, halogen-free
UL 94 flammability rating	HB
Temperature range	–40 °C bis 150 °C
Adhesive	Acrylate

THM WO for labelling with our high-quality Weidmüller thermal transfer printers

Technical data THM WO

THM WriteOn	
Material	Polyester film, halogen-free
UL 94 flammability rating	HB
Approval acc. to UL 969	No
Temperature range	–40 °C bis 150 °C
Adhesive	Acrylate

Technical data THM WO T

Material	Polyvinyl fluoride film - Tedlar®
UL 94 flammability rating	HB
Approval acc. to UL 969	No
Temperature range	–40 °C bis 140 °C
Adhesive	Acrylate

Technical data THM WO VIN

Material	Vinyl film
UL 94 flammability rating	HB
Approval acc. to UL 969	No
Temperature range	–40 °C bis 80 °C
Adhesive	Acrylat

LM WO for labelling with DIN A4 laser printers

LM WO

Technical data

Material	Temperature range	Fire class acc. to UL 94	Adhesive
Polyester film	-40 °C...150 °C	V-0	Acrylate

Ordering data

Order No.	Type		Colour	Labelling field	Conductor O.D.	Qty.
1773880000	LM WO 15/140 WS	❍	White		16.2 - 36.4 mm	260
1759871044	LM WO 15/70 WS	❍	White		8.2 - 14.3 mm	520
1695711687	LM WO 18/34 GE	●	Yellow		5 - 7 mm	880
1695711044	LM WO 18/34 WS	❍	White		5 - 7 mm	880
1695721687	LM WO 23/55 GE	●	Yellow		6.8 - 12 mm	400
1695721044	LM WO 23/55 WS	❍	White		6.8 - 12 mm	400
1768390000	LM WO 25.4/57 GE	●	Yellow		6.8 - 12 mm	350
1768380000	LM WO 25.4/57 WS	❍	White		5.9 - 12.3 mm	350
1768400000	LM WO 25.4/95 WS	❍	White		8 - 22 mm	210
1712491687	LM WO 25/140 GE	●	Yellow		16.2 - 36.4 mm	160
1712491044	LM WO 25/140 WS	❍	White		16.2 - 36.4 mm	160
1695731687	LM WO 25/68 GE	●	Yellow		8.2 - 14.3 mm	280
1695731044	LM WO 25/68 WS	❍	White		8.2 - 14.3 mm	280
1695741687	LM WO 36/93 GE	●	Yellow		9.5 - 22.3 mm	150
1695741044	LM WO 36/93 WS	❍	White		9.5 - 22.3 mm	150
1768430000	LM WO 37/25 GE	●	Yellow		3.4 - 4.8 mm	550

THM WO

Technical data

Material	Temperature range	Fire class acc. to UL 94	Adhesive	Order No.	Type
Polyester film	-40 °C...150 °C	V-0	Polyacrylate adhesive	2005070000	RIBBON MM 110/360 SW

Ordering data

Order No.	Type		Colour	Labelling field	Conductor O.D.	Qty.
1856640000	THM WO 12/18 WS	❍	White	12 x 9 mm	1.9 - 1.9 mm	10000
1774380000	THM WO 17.8/34 WS	❍	White	13 x 17.8 mm	4.4 - 6.7 mm	3000
1109130000	THM WO 24.5/62 WS	❍	White	19.05 x 24.5 mm	6.1 - 13.7 mm	2500
1109140000	THM WO 25.4/95.2 WS	❍	White	25.4 x 25.4 mm	8.1 - 22.3 mm	1000
1751561044	THM WO 25/140 WS	❍	White	26 x 25 mm	8.3 - 36.4 mm	1050
1774350000	THM WO 25/76 WS	❍	White	15 x 25 mm	4.8 - 19.4 mm	1800
1774400000	THM WO 33.5/93.1 WS	❍	White	25 x 33.5 mm	8 - 21.7 mm	500
1109150000	THM WO 50.8/150 WS	❍	White	25.4 x 50.8 mm	8.1 - 39.7 mm	500
1934190000	THM WO 51/36 WS	❍	White	12.7 x 50.8 mm	4 - 7.6 mm	1000
1856630000	THM WO 12/18 GE	●	Yellow	12 x 9 mm	1.9 - 1.9 mm	10000
1751561687	THM WO 25/140 GE	●	Yellow	26 x 25 mm	8.3 - 36.4 mm	1050
1774340000	THM WO 25/76 GE	●	Yellow	15 x 25 mm	4.8 - 19.4 mm	1800
1774410000	THM WO 33.5/93.1 GE	●	Yellow	35.6 x 25 mm	8 - 21.7 mm	500
1109180000	THM WO 50.8/150 GE	●	Yellow	25.4 x 50.8 mm	8.1 - 39.7 mm	500

THM WO T

Technical data

Material	Temperature range	Fire class acc. to UL 94	Adhesive	Order No.	Type
Polyvinyl fluoride film - Tedlar®	-40 °C...140 °C	V-0	Polyacrylate adhesive	2005070000	RIBBON MM 110/360 SW

Ordering data

Order No.	Type		Colour	Labelling field	Conductor O.D.	Qty.
1003380000	THM WO T 24.5/100 WS	❍	White	25 x 24.5 mm	8 - 23 mm	2000
1003420000	THM WO T 24.5/62 WS	❍	White	25 x 24.5 mm	6.1 - 13.7 mm	2500

THM WO VIN

Technical data

Material	Temperature range	Fire class acc. to UL 94	Adhesive	Order No.	Type
Vinyl film	-40 °C...80 °C	V-0	Polyacrylate adhesive	2005070000	RIBBON MM 110/360 SW

Ordering data

Order No.	Type		Colour	Labelling field	Conductor O.D.	Qty.
1382940000	THM WO VIN 12/18 WS	❍	White	9 x 12 mm	2.9 - 2.9 mm	10000
1382930000	THM WO VIN 17.8/34 WS	❍	White	13 x 17.8 mm	4.4 - 6.7 mm	3000
1391430000	THM WO VIN 24.5/100 WS	❍	White	25 x 24.5 mm	8 - 23 mm	2000
1391410000	THM WO VIN 24.5/62 WS	❍	White	25 x 24.5 mm	5.1 - 13.7 mm	2000
1882900000	THM WO VIN 49.5/57.1 WS	❍	White	19.05 x 49.53 mm	12.1 mm	1000

Y-ACHSE
UNIROW LP 6
NC1 Y-ACHSE
A2
PUSH
PUSH

CableLine®

The programme of products for all wire markings

Individual laser markers as a combined system

Our well matched selection of CableLine products provides you with everything you need for all your professional marking requirements. The combination of systems are defined by the application and contain the following: open and closed cross-section markers from 0.5 to 70 mm², individual markers, transparent sleeves and markers for cable tie assembly. They are available in plastic or stainless steel, with the appropriate accessories and with the labelling options; these products optimally fulfil a wide range of requirements. The laser system used by Weidmüller produces abrasive-resistant print with brilliant quality.

CableLine® – the benefits to you

- No print system necessary
- Simple retrospect changes on site possible

The CableLine® programme comprises

- Wire markers
- Cable markers
- Standard or customer special print
- Accessories and tools
- Available in PVC or stainless steel versions

Closed marking from type CLI C with permanent fit. Mounted by sliding onto the wire end.

Open marker from type CLI O also allows mounting onto already connected wires.

Markers from type CLI M are pushed onto holding strips of type CLI MH and finally mounted with cable ties.

CableLine® packaging types

Technical data

	Type	max. characters per marker SDR	Marker length mm	CD	MultiPack	Bag	Looped strip
	CLI C 02-3	1	3	500	1000 (5 x 200)	-	-
	CLI C 02-6	2	6	250	1000 (5 x 200)	-	1000
	CLI C 02-9	3	9	125	500 (5 x 100)	-	1000
	CLI C 02-12	4	12	-	-	-	1000
	CLI C 02-15	5	15	-	-	-	1000
	CLI C 02-18	8	18	-	-	-	1000
	CLI C 02-21	10	21	-	-	-	1000
	CLI C 1-3	1	3	500	1000 (5 x 200)	-	-
	CLI C 1-6	2	6	250	500 (5 x 100)	-	1000
	CLI C 1-9	3	9	125	500 (5 x 100)	-	1000
	CLI C 1-12	4	12	-	-	-	1000
	CLI C 1-15	5	15	-	-	-	1000
	CLI C 1-18	8	18	-	-	-	1000
	CLI C 1-21	10	21	-	-	-	1000
	CLI C 1-24	12	24	-	-	-	1000
	CLI C 1-33	17	33	-	-	-	1000
	CLI C 2-4	1	4	250	500 (5 x 100)	-	-
	CLI C 2-6	2	6	125	500 (5 x 100)	-	1000
	CLI C 2-9	3	9	125	500 (5 x 100)	-	1000
	CLI C 2-12	4	12	-	-	-	1000
	CLI C 2-15	6	15	-	-	-	1000
	CLI C 2-18	8	18	-	-	-	1000
	CLI C 2-21	10	21	-	-	-	1000
	CLI C 3-6	2	6	-	100 (5 x 20)	-	1000
	CLI C 3-9	3	9	-	100 (5 x 20)	-	1000
	CLI C 3-12	4	12	-	-	-	1000
	CLI C 3-15	5	15	-	-	-	1000
	CLI C 3-18	8	18	-	-	-	1000
	CLI C 3-21	10	21	-	-	-	1000
	CLI O 10-3	1	3	-	1000 (5 x 200)	-	-
	CLI O 10-6	2	6	-	1000 (5 x 200)	-	-
	CLI O 20-3	1	3	-	1000 (5 x 200)	-	-
	CLI O 20-6	2	6	-	1000 (5 x 200)	-	-
	CLI O 30-3	1	3	-	1000 (5 x 200)	-	-
	CLI M 2-4	1	4	500	500 (5 x 100)	-	-
	CLI M 2-6	2	6	250	500 (5 x 100)	-	1000
	CLI M 2-9	3	9	125	-	-	1000
	CLI M 2-12	4	12	-	-	-	1000
	CLI M 2-21	10	21	-	-	-	1000
	CLI M 2-25Q	12	25	-	-	-	1000
	CLI M 2-40Q	21	40	-	-	-	1000
	CLI MH-70		70	-	-	100	-
	CLI MH-110		110	-	-	100	-

CLI C – Closed wire markers

CLI C wire markers are fitted to unconnected cables. Four different sizes are available to mark wire cross-sections from 0.5 mm² to maximum 70 mm².
The markers are already printed and ready for use. Individual markings can be created by simply combining the individual markers.

Advantages:

- Closed markers, secure and adjustable for unconnected cables
- Special resilient bellow profile ensures a wide application range
- Fast and easy to fit – in next to no time
- Compatible accessories take the strain off marking tasks
- Permanent high-quality markings
- Best contrast for optimum legibility

Closed marking from type CLI C with permanent fit.
Mounted by sliding onto the wire end.

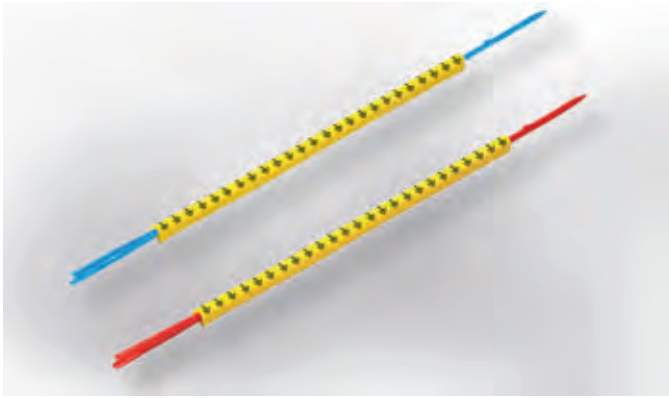

CLI R are pre-assembled mounting mandrels with CLI C markers.

CLI C

Version	Closed markers made from soft PVC. Resilient bellow construction enables fast and easy attachment. Standard, special and international colour-code compliant prints available.
Material	Soft PVC, cadmium- and silicone-free
Temperature range	–30 °C ... 80 °C
Flammability classification	Corresponds to V0 to UL 94
Resistance	Highly resistant to oils and petrol as well as gamma and UV radiation
Printing	Laser marking

Wire cross-section

CLI C02	0.5 mm² – 1.5 mm²
CLI C 1	1.5 mm² – 4 mm²
CLI C 2	2.5 mm² – 16 mm²
CLI C 3	16 mm² – 70 mm²

CLI C 02 Blank (CD)

Technical data

Material	Fire class acc. to UL 94	Temperature range	Conductor O.D.	Version
PVC, soft, without Cadmium	V-0	-30 °C...80 °C	1 - 3 mm	CD

Ordering data

Order No.	Type	Colour	Length / Width	Printing	Qty.
1568241058	CLI C 02-3 GE NE CD	Yellow	3 / 3.4 mm	Blank	500

CLI C 02 Blank (MultiPack)

Technical data

Material	Fire class acc. to UL 94	Temperature range	Conductor O.D.	Version
PVC, soft, without Cadmium	V-0	-30 °C...80 °C	1 - 3 mm	MultiPack

Ordering data

Order No.	Type	Colour	Length / Width	Printing	Qty.
0213811687	CLI C 02-3 GE NE MP	Yellow	3 / 3.5 mm	Blank	200

CLI C 02 Blank (on loop)

Technical data

Material	Fire class acc. to UL 94	Temperature range	Conductor O.D.	Version
PVC, soft, without Cadmium	V-0	-30 °C...80 °C	1 - 3 mm	Loop

Ordering data

Order No.	Type	Colour	Length / Width	Printing	Qty.
1873741687	CLI C 02-18 GE NE SG	Yellow	18 / 3.4 mm	Blank	1000

CLI C 1 Blank (MultiPack)

Technical data

Material	Fire class acc. to UL 94	Temperature range	Conductor O.D.	Version
PVC, soft, without Cadmium	V-0	-30 °C...80 °C	3 - 5 mm	MultiPack

Ordering data

Order No.	Type	Colour	Length / Width	Printing	Qty.
0171111687	CLI C 1-3 GE NE MP	Yellow	3 / 4.2 mm	Blank	200

CableLine® – CLI C – closed wire markers

CLI C 1 Blank (CD)

Technical data

Material	Fire class acc. to UL 94	Temperature range	Conductor O.D.	Version
PVC, soft, without Cadmium	V-0	-30 °C...80 °C	3 - 5 mm	CD

Ordering data

Order No.	Type	Colour	Length / Width	Printing	Qty.
1568251693	CLI C 1-3 BL NE CD	Blue	3 / 4.2 mm	Blank	500
1568251699	CLI C 1-3 GE NE CD	Yellow	3 / 4.2 mm	Blank	500
1568251688	CLI C 1-3 GN NE CD	Green	3 / 4.2 mm	Blank	500
1568251691	CLI C 1-3 GR NE CD	Grey	3 / 4.2 mm	Blank	500
1568251686	CLI C 1-3 RT NE CD	Red	3 / 4.2 mm	Blank	500
1568251694	CLI C 1-3 SW NE CD	Black	3 / 4.2 mm	Blank	500
1568251044	CLI C 1-3 WS NE CD	White	3 / 4.2 mm	Blank	500
1868811687	CLI C 1-6 GE NE CD	Yellow	6 / 4.2 mm	Blank	250

CLI C 1 Blank (on loop)

Technical data

Material	Fire class acc. to UL 94	Temperature range	Conductor O.D.	Version
PVC, soft, without Cadmium	V-0	-30 °C...80 °C	3 - 5 mm	Loop

Ordering data

Order No.	Type	Colour	Length / Width	Printing	Qty.
1871801687	CLI C 1-18 GE NE SG	Yellow	18 / 4.2 mm	Neutral	1000

CLI C 2 Blank (CD)

Technical data

Material	Fire class acc. to UL 94	Temperature range	Conductor O.D.	Version
PVC, soft, without Cadmium	V-0	-30 °C...60 °C	4 - 10 mm	CD

Ordering data

Order No.	Type	Colour	Length / Width	Printing	Qty.
0171301687	CLI C 2-4 GE NE CD	Yellow	4 / 6.9 mm	Blank	250
1871971687	CLI C 2-9 GE NE CD	Yellow	9 / 6.9 mm	Blank	125

CLI C 2 Blank (on loop)

Technical data

Material	Fire class acc. to UL 94	Temperature range	Conductor O.D.	Version
PVC, soft, without Cadmium	V-0	-30 °C...60 °C	4 - 10 mm	Loop

Ordering data

Order No.	Type	Colour	Length / Width	Printing	Qty.
1871831687	CLI C 2-18 GE NE SG	Yellow	18 / 6.9 mm	Blank	1000

CLI C 02 Custom printing (CD)

Technical data

Material	Fire class acc. to UL 94	Temperature range	Conductor O.D.	Version
PVC, soft, without Cadmium	V-0	80 °C	1 - 3 mm	CD

Ordering data

Order No.	Type	Colour	Length / Width	Printing	Qty.
1568249999	CLI C 02-3 SDR CD	CSP	3 / 3.4 mm	Custom printing	500
1869999999	CLI C 02-6 SDR CD	CSP	6 / 3.4 mm	Custom printing	250
1899290000	CLI C 02-9 SDR CD	CSP	9 / 3.4 mm	Custom printing	125

CLI C 02 Custom printing (on loop)

Technical data

Material	Fire class acc. to UL 94	Temperature range	Conductor O.D.	Version
PVC, soft, without Cadmium	V-0	80 °C	1 - 3 mm	Loop

Ordering data

Order No.	Type	Colour	Length / Width	Printing	Qty.
1912550000	CLI C 02-3 SDR SG	CSP	3 / 3.4 mm	Custom printing	100
1873330000	CLI C 02-12 SDR SG	CSP	12 / 3.4 mm	Custom printing	100
0252509999	CLI C 02-15 SDR SG	CSP	15 / 3.4 mm	Custom printing	100
1873749999	CLI C 02-18 SDR SG	CSP	18 / 3.4 mm	Custom printing	100
1873340000	CLI C 02-21 SDR SG	CSP	21 / 3.4 mm	Custom printing	100
1912500000	CLI C 02-24 SDR SG	CSP	24 / 3.4 mm	Custom printing	100
1912510000	CLI C 02-27 SDR SG	CSP	27 / 3.4 mm	Custom printing	100
1912580000	CLI C 02-30 SDR SG	CSP	30 / 3.4 mm	Custom printing	100
1912590000	CLI C 02-33 SDR SG	CSP	33 / 3.4 mm	Custom printing	100
1912600000	CLI C 02-36 SDR SG	CSP	36 / 3.4 mm	Custom printing	100
1912610000	CLI C 02-39 SDR SG	CSP	39 / 3.4 mm	Custom printing	100

CLI C 1 Custom printing (CD)

Technical data

Material	Fire class acc. to UL 94	Temperature range	Conductor O.D.	Version
PVC, soft, without Cadmium	V-0	80 °C	3 - 5 mm	CD

Ordering data

Order No.	Type	Colour	Length / Width	Printing	Qty.
1568259999	CLI C 1-3 SDR CD	CSP	3 / 4.2 mm	Custom printing	500
0252709999	CLI C 1-6 SDR CD	CSP	6 / 4.2 mm	Custom printing	250
0252809999	CLI C 1-9 SDR CD	CSP	9 / 4.2 mm	Custom printing	125

CableLine® – CLI C – closed wire markers

CLI C 1 Custom printing (on loop)

Technical data

Material	Fire class acc. to UL 94	Temperature range	Conductor O.D.	Version
PVC, soft, without Cadmium	V-0	80 °C	3 - 5 mm	Loop

Ordering data

Order No.	Type	Colour	Length / Width	Printing	Qty.
1912650000	CLI C 1-3 SDR SG	CSP	3 / 4.2 mm	Custom printing	100
1912700000	CLI C 1-6 SDR SG	CSP	6 / 4.2 mm	Custom printing	100
1868819999	CLI C 1-9 SDR SG	CSP	9 / 4.2 mm	Custom printing	100
1873350000	CLI C 1-12 SDR SG	CSP	12 / 4.2 mm	Custom printing	100
1873360000	CLI C 1-15 SDR SG	CSP	15 / 4.2 mm	Custom printing	100
1871809999	CLI C 1-18 SDR SG	CSP	18 / 4.2 mm	Custom printing	100
1873370000	CLI C 1-21 SDR SG	CSP	21 / 4.2 mm	Custom printing	100
1912640000	CLI C 1-27 SDR SG	CSP	27 / 4.2 mm	Custom printing	100
1912660000	CLI C 1-30 SDR SG	CSP	30 / 4.2 mm	Custom printing	100
1912670000	CLI C 1-33 SDR SG	CSP	33 / 4.2 mm	Custom printing	100
1912680000	CLI C 1-39 SDR SG	CSP	36 / 4.2 mm	Custom printing	100

CLI C 2 Custom printing (CD)

Technical data

Material	Fire class acc. to UL 94	Temperature range	Conductor O.D.	Version
PVC, soft, without Cadmium	V-0	80 °C	4 - 10 mm	CD

Ordering data

Order No.	Type	Colour	Length / Width	Printing	Qty.
1568269999	CLI C 2-4 SDR CD	CSP	4 / 6.9 mm	Custom printing	250
1871909999	CLI C 2-6 SDR CD	CSP	6 / 6.9 mm	Custom printing	125
1899240000	CLI C 2-9 SDR CD	CSP	9 / 6.9 mm	Custom printing	100

CLI C 2 Custom printing (on loop)

Technical data

Material	Fire class acc. to UL 94	Temperature range	Conductor O.D.	Version
PVC, soft, without Cadmium	V-0	80 °C	4 - 10 mm	Loop

Ordering data

Order No.	Type	Colour	Length / Width	Printing	Qty.
1871979999	CLI C 2-9 SDR SG	CSP	9 / 6.9 mm	Custom printing	125
1873380000	CLI C 2-12 SDR SG	CSP	12 / 6.9 mm	Custom printing	100
1873390000	CLI C 2-15 SDR SG	CSP	15 / 6.9 mm	Custom printing	100
1871839999	CLI C 2-18 SDR SG	CSP	18 / 6.9 mm	Custom printing	100
1873400000	CLI C 2-21 SDR SG	CSP	21 / 6.9 mm	Custom printing	100
1912710000	CLI C 2-24 SDR SG	CSP	24 / 6.9 mm	Custom printing	100
1912720000	CLI C 2-27 SDR SG	CSP	27 / 6.9 mm	Custom printing	100
1912730000	CLI C 2-30 SDR SG	CSP	30 / 6.9 mm	Custom printing	100
1912740000	CLI C 2-33 SDR SG	CSP	33 / 6.9 mm	Custom printing	100
1912750000	CLI C 2-36 SDR SG	CSP	36 / 6.9 mm	Custom printing	100
1912760000	CLI C 2-39 SDR SG	CSP	39 / 6.9 mm	Custom printing	100

CLI C 3 Custom printing (LOOP)

Technical data

Material	Fire class acc. to UL 94	Temperature range	Conductor O.D.	Version
PVC, soft, without Cadmium	V-0	80 °C	8 - 16 mm	Loop

Ordering data

Order No.	Type	Colour	Length / Width	Printing	Qty.
1872309999	CLI C 3-6 SDR SG	CSP	6 / 11 mm	Custom printing	500
1872659999	CLI C 3-9 SDR SG	CSP	9 / 11 mm	Custom printing	100
1873420000	CLI C 3-12 SDR SG	CSP	12 / 11 mm	Custom printing	100
1873430000	CLI C 3-15 SDR SG	CSP	15 / 11 mm	Custom printing	125
1872679999	CLI C 3-18 SDR SG	CSP	18 / 11 mm	Custom printing	100
1873410000	CLI C 3-21 SDR SG	CSP	21 / 11 mm	Custom printing	100
1912770000	CLI C 3-24 SDR SG	CSP	24 / 11 mm	Custom printing	100
1912780000	CLI C 3-27 SDR SG	CSP	27 / 11 mm	Custom printing	100
1912790000	CLI C 3-30 SDR SG	CSP	30 / 11 mm	Custom printing	100
1912800000	CLI C 3-33 SDR SG	CSP	33 / 11 mm	Custom printing	100
1912810000	CLI C 3-36 SDR SG	CSP	36 / 11 mm	Custom printing	100
1912820000	CLI C 3-39 SDR SG	CSP	39 / 11 mm	Custom printing	100

CLI C 02-3 International colour code (MultiPack)

Technical data

Material	Fire class acc. to UL 94	Temperature range	Conductor O.D.	Version
PVC, soft, without Cadmium	V-0	-30 °C...80 °C	1 - 3 mm	MultiPack

Ordering data

Order No.	Type		Colour	Length / Width	Printing	Qty.
0252111503	CLI C 02-3 SW/WS 0 MP	●	Black	3 / 3.4 mm	0	200
0252111506	CLI C 02-3 BR/WS 1 MP	●	Brown	3 / 3.4 mm	1	200
0252111509	CLI C 02-3 RT/SW 2 MP	●	Red	3 / 3.4 mm	2	200
0252111512	CLI C 02-3 OR/SW 3 MP	●	Orange	3 / 3.4 mm	3	200
0252111514	CLI C 02-3 GE/SW 4 MP	●	Yellow	3 / 3.4 mm	4	200
0252111518	CLI C 02-3 GN/SW 5 MP	●	Green	3 / 3.4 mm	5	200
0252111521	CLI C 02-3 BL/SW 6 MP	●	Blue	3 / 3.4 mm	6	200
0252111524	CLI C 02-3 VI/SW 7 MP	●	Violet	3 / 3.4 mm	7	200
0252111527	CLI C 02-3 GR/SW 8 MP	●	Grey	3 / 3.4 mm	8	200
0252111530	CLI C 02-3 WS/SW 9 MP	○	White	3 / 3.4 mm	9	200

CLI C 02-3 Alphabetic (MulitPack)

Technical data

Material	Fire class acc. to UL 94	Temperature range	Conductor O.D.	Version
PVC, soft, without Cadmium	V-0	-30 °C...80 °C	1 - 3 mm	MultiPack

Ordering data

Order No.	Type		Colour	Length / Width	Printing	Qty.
0252111637	CLI C 02-3 GE/SW A MP	●	Yellow	3 / 3.4 mm	A	200
0252111639	CLI C 02-3 GE/SW B MP	●	Yellow	3 / 3.4 mm	B	200
0252111641	CLI C 02-3 GE/SW C MP	●	Yellow	3 / 3.4 mm	C	200
0252111643	CLI C 02-3 GE/SW D MP	●	Yellow	3 / 3.4 mm	D	200
0252111645	CLI C 02-3 GE/SW E MP	●	Yellow	3 / 3.4 mm	E	200
0252111647	CLI C 02-3 GE/SW F MP	●	Yellow	3 / 3.4 mm	F	200
0252111649	CLI C 02-3 GE/SW G MP	●	Yellow	3 / 3.4 mm	G	200
0252111651	CLI C 02-3 GE/SW H MP	●	Yellow	3 / 3.4 mm	H	200
0252111653	CLI C 02-3 GE/SW I MP	●	Yellow	3 / 3.4 mm	I	200
0252111655	CLI C 02-3 GE/SW J MP	●	Yellow	3 / 3.4 mm	J	200
0252111657	CLI C 02-3 GE/SW K MP	●	Yellow	3 / 3.4 mm	K	200
0252111659	CLI C 02-3 GE/SW L MP	●	Yellow	3 / 3.4 mm	L	200
0252111661	CLI C 02-3 GE/SW M MP	●	Yellow	3 / 3.4 mm	M	200
0252111663	CLI C 02-3 GE/SW N MP	●	Yellow	3 / 3.4 mm	N	200
0252111665	CLI C 02-3 GE/SW O MP	●	Yellow	3 / 3.4 mm	O	200
0252111667	CLI C 02-3 GE/SW P MP	●	Yellow	3 / 3.4 mm	P	200
0252111669	CLI C 02-3 GE/SW Q MP	●	Yellow	3 / 3.4 mm	Q	200
0252111671	CLI C 02-3 GE/SW R MP	●	Yellow	3 / 3.4 mm	R	200
0252111673	CLI C 02-3 GE/SW S MP	●	Yellow	3 / 3.4 mm	S	200
0252111676	CLI C 02-3 GE/SW T MP	●	Yellow	3 / 3.4 mm	T	200
0252111679	CLI C 02-3 GE/SW U MP	●	Yellow	3 / 3.4 mm	U	200
0252111681	CLI C 02-3 GE/SW V MP	●	Yellow	3 / 3.4 mm	V	200
0252111683	CLI C 02-3 GE/SW W MP	●	Yellow	3 / 3.4 mm	W	200
0252111687	CLI C 02-3 GE/SW X MP	●	Yellow	3 / 3.4 mm	X	200
0252111696	CLI C 02-3 GE/SW Y MP	●	Yellow	3 / 3.4 mm	Y	200
0252111698	CLI C 02-3 GE/SW Z MP	●	Yellow	3 / 3.4 mm	Z	200

CLI C 02-3 Special characters (MultiPack)

Technical data

Material	Fire class acc. to UL 94	Temperature range	Conductor O.D.	Version
PVC, soft, without Cadmium	V-0	-30 °C...80 °C	1 - 3 mm	MultiPack

Ordering data

Order No.	Type		Colour	Length / Width	Printing	Qty.
0252111742	CLI C 02-3 GE/SW / MP	●	Yellow	3 / 3.4 mm	/	200
0252111738	CLI C 02-3 GE/SW + MP	●	Yellow	3 / 3.4 mm	+	200
0252111740	CLI C 02-3 GE/SW - MP	●	Yellow	3 / 3.4 mm	-	200
0252111748	CLI C 02-3 GE/SW . MP	●	Yellow	3 / 3.4 mm	.	200
0252111750	CLI C 02-3 GE/SW : MP	●	Yellow	3 / 3.4 mm	:	200
0252111751	CLI C 02-3 GE/SW = MP	●	Yellow	3 / 3.4 mm	=	200
0252111752	CLI C 02-3 GE/SW AC MP	●	Yellow	3 / 3.4 mm	AC	200
0252111746	CLI C 02-3 GE/SW ET MP	●	Yellow	3 / 3.4 mm	⏚	200
0252111697	CLI C 02-3 GE/SW Ä MP	●	Yellow	3 / 3.4 mm	Ä	200
0252111699	CLI C 02-3 GE/SW Å MP	●	Yellow	3 / 3.4 mm	Å	200
1568241735	CLI C 02-3 GE/SW Æ CD	●	Yellow	3 / 3.4 mm	Æ	500
0252111695	CLI C 02-3 GE/SW Ö MP	●	Yellow	3 / 3.4 mm	Ö	200
1568241736	CLI C 02-3 GE/SW Ø CD	●	Yellow	3 / 3.4 mm	Ø	500
0252111741	CLI C 02-3 BL/SW - MP	●	Blue	3 / 3.4 mm	-	200
0252111737	CLI C 02-3 RT/SW + MP	●	Red	3 / 3.4 mm	+	200

CLI C 02-3 International colour code (CD)

Technical data

Material	Fire class acc. to UL 94	Temperature range	Conductor O.D.	Version
PVC, soft, without Cadmium	V-0	-30 °C...80 °C	1 - 3 mm	CD

Ordering data

Order No.	Type		Colour	Length / Width	Printing	Qty.
1568241503	CLI C 02-3 SW/WS 0 CD	●	Black	3 / 3.4 mm	0	500
1568241506	CLI C 02-3 BR/WS 1 CD	●	Brown	3 / 3.4 mm	1	500
1568241509	CLI C 02-3 RT/SW 2 CD	●	Red	3 / 3.4 mm	2	500
1568241512	CLI C 02-3 OR/SW 3 CD	●	Orange	3 / 3.4 mm	3	500
1568241514	CLI C 02-3 GE/SW 4 CD	●	Yellow	3 / 3.4 mm	4	500
1568241518	CLI C 02-3 GN/SW 5 CD	●	Green	3 / 3.4 mm	5	500
1568241521	CLI C 02-3 BL/SW 6 CD	●	Blue	3 / 3.4 mm	6	500
1568241524	CLI C 02-3 VI/SW 7 CD	●	Violet	3 / 3.4 mm	7	500
1568241527	CLI C 02-3 GR/SW 8 CD	●	Grey	3 / 3.4 mm	8	500
1568241530	CLI C 02-3 WS/SW 9 CD	❍	White	3 / 3.4 mm	9	500

CLI C 02-3 Numeric sequence (CD)

Technical data

Material	Fire class acc. to UL 94	Temperature range	Conductor O.D.	Version
PVC, soft, without Cadmium	V-0	-30 °C...80 °C	1 - 3 mm	CD

Ordering data

Order No.	Type		Colour	Length / Width	Printing	Qty.
1568241502	CLI C 02-3 GE/SW 0 CD	●	Yellow	3 / 3.4 mm	0	500
1869821502	CLI C 02-3 WS/SW 0 CD	❍	White	3 / 3.4 mm	0	500
1568241505	CLI C 02-3 GE/SW 1 CD	●	Yellow	3 / 3.4 mm	1	500
1869821505	CLI C 02-3 WS/SW 1 CD	❍	White	3 / 3.4 mm	1	500
1568241508	CLI C 02-3 GE/SW 2 CD	●	Yellow	3 / 3.4 mm	2	500
1869821508	CLI C 02-3 WS/SW 2 CD	❍	White	3 / 3.4 mm	2	500
1568241511	CLI C 02-3 GE/SW 3 CD	●	Yellow	3 / 3.4 mm	3	500
1869821511	CLI C 02-3 WS/SW 3 CD	❍	White	3 / 3.4 mm	3	500
1568241514	CLI C 02-3 GE/SW 4 CD	●	Yellow	3 / 3.4 mm	4	500
1869821514	CLI C 02-3 WS/SW 4 CD	❍	White	3 / 3.4 mm	4	500
1568241517	CLI C 02-3 GE/SW 5 CD	●	Yellow	3 / 3.4 mm	5	500
1869821517	CLI C 02-3 WS/SW 5 CD	❍	White	3 / 3.4 mm	5	500
1568241520	CLI C 02-3 GE/SW 6 CD	●	Yellow	3 / 3.4 mm	6	500
1869821520	CLI C 02-3 WS/SW 6 CD	❍	White	3 / 3.4 mm	6	500
1568241523	CLI C 02-3 GE/SW 7 CD	●	Yellow	3 / 3.4 mm	7	500
1869821523	CLI C 02-3 WS/SW 7 CD	❍	White	3 / 3.4 mm	7	500
1568241526	CLI C 02-3 GE/SW 8 CD	●	Yellow	3 / 3.4 mm	8	500
1869821526	CLI C 02-3 WS/SW 8 CD	❍	White	3 / 3.4 mm	8	500
1568241529	CLI C 02-3 GE/SW 9 CD	●	Yellow	3 / 3.4 mm	9	500
1568241530	CLI C 02-3 WS/SW 9 CD	❍	White	3 / 3.4 mm	9	500

CLI C 02-3 Alphabetic (CD)

Technical data

Material	Fire class acc. to UL 94	Temperature range	Conductor O.D.	Version
PVC, soft, without Cadmium	V-0	-30 °C...80 °C	1 - 3 mm	CD

Ordering data

Order No.	Type	Colour	Length / Width	Printing	Qty.
1568241637	CLI C 02-3 GE/SW A CD	Yellow	3 / 3.4 mm	A	500
1568241639	CLI C 02-3 GE/SW B CD	Yellow	3 / 3.4 mm	B	500
1568241641	CLI C 02-3 GE/SW C CD	Yellow	3 / 3.4 mm	C	500
1568241643	CLI C 02-3 GE/SW D CD	Yellow	3 / 3.4 mm	D	500
1568241645	CLI C 02-3 GE/SW E CD	Yellow	3 / 3.4 mm	E	500
1568241647	CLI C 02-3 GE/SW F CD	Yellow	3 / 3.4 mm	F	500
1568241649	CLI C 02-3 GE/SW G CD	Yellow	3 / 3.4 mm	G	500
1568241651	CLI C 02-3 GE/SW H CD	Yellow	3 / 3.4 mm	H	500
1568241653	CLI C 02-3 GE/SW I CD	Yellow	3 / 3.4 mm	I	500
1568241655	CLI C 02-3 GE/SW J CD	Yellow	3 / 3.4 mm	J	500
1568241657	CLI C 02-3 GE/SW K CD	Yellow	3 / 3.4 mm	K	500
1568241659	CLI C 02-3 GE/SW L CD	Yellow	3 / 3.4 mm	L	500
1568241661	CLI C 02-3 GE/SW M CD	Yellow	3 / 3.4 mm	M	500
1568241663	CLI C 02-3 GE/SW N CD	Yellow	3 / 3.4 mm	N	500
1568241665	CLI C 02-3 GE/SW O CD	Yellow	3 / 3.4 mm	O	500
1568241667	CLI C 02-3 GE/SW P CD	Yellow	3 / 3.4 mm	P	500
1568241669	CLI C 02-3 GE/SW Q CD	Yellow	3 / 3.4 mm	Q	500
1568241671	CLI C 02-3 GE/SW R CD	Yellow	3 / 3.4 mm	R	500
1568241673	CLI C 02-3 GE/SW S CD	Yellow	3 / 3.4 mm	S	500
1568241676	CLI C 02-3 GE/SW T CD	Yellow	3 / 3.4 mm	T	500
1568241679	CLI C 02-3 GE/SW U CD	Yellow	3 / 3.4 mm	U	500
1568241681	CLI C 02-3 GE/SW V CD	Yellow	3 / 3.4 mm	V	500
1568241683	CLI C 02-3 GE/SW W CD	Yellow	3 / 3.4 mm	W	500
1568241687	CLI C 02-3 GE/SW X CD	Yellow	3 / 3.4 mm	X	500
1568241696	CLI C 02-3 GE/SW Y CD	Yellow	3 / 3.4 mm	Y	500
1568241698	CLI C 02-3 GE/SW Z CD	Yellow	3 / 3.4 mm	Z	500

CLI C 02-3 Special characters (CD)

Technical data

Material	Fire class acc. to UL 94	Temperature range	Conductor O.D.	Version
PVC, soft, without Cadmium	V-0	-30 °C...80 °C	1 - 3 mm	CD

Ordering data

Order No.	Type	Colour	Length / Width	Printing	Qty.
1568241738	CLI C 02-3 GE/SW + CD	Yellow	3 / 3.4 mm	+	500
1568241740	CLI C 02-3 GE/SW - CD	Yellow	3 / 3.4 mm	-	500
1869821740	CLI C 02-3 WS/SW - CD	White	3 / 3.4 mm	-	500
1568241748	CLI C 02-3 GE/SW . CD	Yellow	3 / 3.4 mm	.	500
1568241742	CLI C 02-3 GE/SW / CD	Yellow	3 / 3.4 mm	/	500
1568241750	CLI C 02-3 GE/SW : CD	Yellow	3 / 3.4 mm	:	500
1568241751	CLI C 02-3 GE/SW = CD	Yellow	3 / 3.4 mm	=	500
1568241752	CLI C 02-3 GE/SW AC CD	Yellow	3 / 3.4 mm	AC	500
1568241746	CLI C 02-3 GE/SW ET CD	Yellow	3 / 3.4 mm	⏚	500
1568241747	CLI C 02-3 GE/SW PET. CD	Yellow	3 / 3.4 mm	⏚	500
1568241056	CLI C 02-3 GE/SW Ä CD	Yellow	3 / 3.4 mm	Ä	500
1568241055	CLI C 02-3 GE/SW Å CD	Yellow	3 / 3.4 mm	Å	500
1568241057	CLI C 02-3 GE/SW Ö CD	Yellow	3 / 3.4 mm	Ö	500
1568241741	CLI C 02-3 BL/SW - CD	Blue	3 / 3.4 mm	-	500
1568241737	CLI C 02-3 RT/SW + CD	Red	3 / 3.4 mm	+	500

CLI C 02-6 Special characters (CD)

Technical data

Material	Fire class acc. to UL 94	Temperature range	Conductor O.D.	Version
PVC, soft, without Cadmium	V-0	-30 °C...80 °C	1 - 3 mm	CD

Ordering data

Order No.	Type		Colour	Length / Width	Printing	Qty.
1568241726	CLI C 02-6 GE/SW A1 CD	●	Yellow	6 / 3.4 mm	A1	250
1568241727	CLI C 02-6 GE/SW A2 CD	●	Yellow	6 / 3.4 mm	A2	250
1568241728	CLI C 02-6 GE/SW L1 CD	●	Yellow	6 / 3.4 mm	L1	250
1568241729	CLI C 02-6 GE/SW L2 CD	●	Yellow	6 / 3.4 mm	L2	250
1568241730	CLI C 02-6 GE/SW L3 CD	●	Yellow	6 / 3.4 mm	L3	250

CLI C 02-6 Special characters (MultiPack)

Technical data

Material	Fire class acc. to UL 94	Temperature range	Conductor O.D.	Version
PVC, soft, without Cadmium	V-0	-30 °C...80 °C	1 - 3 mm	MultiPack

Ordering data

Order No.	Type		Colour	Length / Width	Printing	Qty.
0252111726	CLI C 02-6 GE/SW A1 MP	●	Yellow	6 / 3.4 mm	A1	200
0252111727	CLI C 02-6 GE/SW A2 MP	●	Yellow	6 / 3.4 mm	A2	200
0252111728	CLI C 02-6 GE/SW L1 MP	●	Yellow	6 / 3.4 mm	L1	200
0252111729	CLI C 02-6 GE/SW L2 MP	●	Yellow	6 / 3.4 mm	L2	200
0252111730	CLI C 02-6 GE/SW L3 MP	●	Yellow	6 / 3.4 mm	L3	200

CLI C 02-9 Special characters (MultiPack)

Technical data

Material	Fire class acc. to UL 94	Temperature range	Conductor O.D.	Version
PVC, soft, without Cadmium	V-0	-30 °C...80 °C	1 - 3 mm	MultiPack

Ordering data

Order No.	Type		Colour	Length / Width	Printing	Qty.
0252111734	CLI C 02-9 GE/SW PEN MP	●	Yellow	9 / 3.4 mm	PEN	100

CLI C 02-9 Special characters (CD)

Technical data

Material	Fire class acc. to UL 94	Temperature range	Conductor O.D.	Version
PVC, soft, without Cadmium	V-0	-30 °C...80 °C	1 - 3 mm	CD

Ordering data

Order No.	Type		Colour	Length / Width	Printing	Qty.
1568241734	CLI C 02-9 GE/SW PEN CD	●	Yellow	9 / 3.4 mm	PEN	125

CableLine® – CLI C – closed wire markers

CLI C 1-3 International colour code (MultiPack)

Technical data

Material	Fire class acc. to UL 94	Temperature range	Conductor O.D.	Version
PVC, soft, without Cadmium	V-0	-30 °C...80 °C	3 - 5 mm	MultiPack

Ordering data

Order No.	Type	Colour	Length / Width	Printing	Qty.
0252611503	CLI C 1-3 SW/WS 0 MP	Black	3 / 4.2 mm	0	200
0252611506	CLI C 1-3 BR/WS 1 MP	Brown	3 / 4.2 mm	1	200
0252611509	CLI C 1-3 RT/SW 2 MP	Red	3 / 4.2 mm	2	200
0252611512	CLI C 1-3 OR/SW 3 MP	Orange	3 / 4.2 mm	3	200
0252611514	CLI C 1-3 GE/SW 4 MP	Yellow	3 / 4.2 mm	4	200
0252611518	CLI C 1-3 GN/SW 5 MP	Green	3 / 4.2 mm	5	200
0252611521	CLI C 1-3 BL/SW 6 MP	Blue	3 / 4.2 mm	6	200
0252611524	CLI C 1-3 VI/SW 7 MP	Violet	3 / 4.2 mm	7	200
0252611527	CLI C 1-3 GR/SW 8 MP	Grey	3 / 4.2 mm	8	200
0252611530	CLI C 1-3 WS/SW 9 MP	White	3 / 4.2 mm	9	200

CLI C 1-3 Numeric sequence (MultiPack)

Technical data

Material	Fire class acc. to UL 94	Temperature range	Conductor O.D.	Version
PVC, soft, without Cadmium	V-0	-30 °C...80 °C	3 - 5 mm	MultiPack

Ordering data

Order No.	Type	Colour	Length / Width	Printing	Qty.
0252611502	CLI C 1-3 GE/SW 0 MP	Yellow	3 / 4.2 mm	0	200
0252611505	CLI C 1-3 GE/SW 1 MP	Yellow	3 / 4.2 mm	1	200
0252611508	CLI C 1-3 GE/SW 2 MP	Yellow	3 / 4.2 mm	2	200
0252611511	CLI C 1-3 GE/SW 3 MP	Yellow	3 / 4.2 mm	3	200
0252611514	CLI C 1-3 GE/SW 4 MP	Yellow	3 / 4.2 mm	4	200
0252611517	CLI C 1-3 GE/SW 5 MP	Yellow	3 / 4.2 mm	5	200
0252611520	CLI C 1-3 GE/SW 6 MP	Yellow	3 / 4.2 mm	6	200
0252611523	CLI C 1-3 GE/SW 7 MP	Yellow	3 / 4.2 mm	7	200
0252611526	CLI C 1-3 GE/SW 8 MP	Yellow	3 / 4.2 mm	8	200
0252611529	CLI C 1-3 GE/SW 9 MP	Yellow	3 / 4.2 mm	9	200

CLI C 1-3 Alphabetic (MulitPack)

Technical data

Material	Fire class acc. to UL 94	Temperature range	Conductor O.D.	Version
PVC, soft, without Cadmium	V-0	-30 °C...80 °C	3 - 5 mm	MultiPack

Ordering data

Order No.	Type	Colour	Length / Width	Printing	Qty.
0252611637	CLI C 1-3 GE/SW A MP	Yellow	3 / 4.2 mm	A	200
0252611639	CLI C 1-3 GE/SW B MP	Yellow	3 / 4.2 mm	B	200
0252611641	CLI C 1-3 GE/SW C MP	Yellow	3 / 4.2 mm	C	200
0252611643	CLI C 1-3 GE/SW D MP	Yellow	3 / 4.2 mm	D	200
0252611645	CLI C 1-3 GE/SW E MP	Yellow	3 / 4.2 mm	E	200
0252611647	CLI C 1-3 GE/SW F MP	Yellow	3 / 4.2 mm	F	200
0252611649	CLI C 1-3 GE/SW G MP	Yellow	3 / 4.2 mm	G	200
0252611651	CLI C 1-3 GE/SW H MP	Yellow	3 / 4.2 mm	H	200
0252611653	CLI C 1-3 GE/SW I MP	Yellow	3 / 4.2 mm	I	200
0252611655	CLI C 1-3 GE/SW J MP	Yellow	3 / 4.2 mm	J	200
0252611657	CLI C 1-3 GE/SW K MP	Yellow	3 / 4.2 mm	K	200
0252611659	CLI C 1-3 GE/SW L MP	Yellow	3 / 4.2 mm	L	200
0252611661	CLI C 1-3 GE/SW M MP	Yellow	3 / 4.2 mm	M	200
0252611663	CLI C 1-3 GE/SW N MP	Yellow	3 / 4.2 mm	N	200
0252611665	CLI C 1-3 GE/SW O MP	Yellow	3 / 4.2 mm	O	200
0252611667	CLI C 1-3 GE/SW P MP	Yellow	3 / 4.2 mm	P	200
0252611669	CLI C 1-3 GE/SW Q MP	Yellow	3 / 4.2 mm	Q	200
0252611671	CLI C 1-3 GE/SW R MP	Yellow	3 / 4.2 mm	R	200
0252611673	CLI C 1-3 GE/SW S MP	Yellow	3 / 4.2 mm	S	200
0252611676	CLI C 1-3 GE/SW T MP	Yellow	3 / 4.2 mm	T	200
0252611679	CLI C 1-3 GE/SW U MP	Yellow	3 / 4.2 mm	U	200
0252611681	CLI C 1-3 GE/SW V MP	Yellow	3 / 4.2 mm	V	200
0252611683	CLI C 1-3 GE/SW W MP	Yellow	3 / 4.2 mm	W	200
0252611687	CLI C 1-3 GE/SW X MP	Yellow	3 / 4.2 mm	X	200
0252611696	CLI C 1-3 GE/SW Y MP	Yellow	3 / 4.2 mm	Y	200
0252611698	CLI C 1-3 GE/SW Z MP	Yellow	3 / 4.2 mm	Z	200

CLI C 1-3 Special characters (MultiPack)

Technical data

Material	Fire class acc. to UL 94	Temperature range	Conductor O.D.	Version
PVC, soft, without Cadmium	V-0	-30 °C...80 °C	3 - 5 mm	MultiPack

Ordering data

Order No.	Type	Colour	Length / Width	Printing	Qty.
0252611738	CLI C 1-3 GE/SW + MP	Yellow	3 / 4.2 mm	+	200
0252611740	CLI C 1-3 GE/SW - MP	Yellow	3 / 4.2 mm	-	200
0252611748	CLI C 1-3 GE/SW . MP	Yellow	3 / 4.2 mm	.	200
0252611742	CLI C 1-3 GE/SW / MP	Yellow	3 / 4.2 mm	/	200
0252611750	CLI C 1-3 GE/SW : MP	Yellow	3 / 4.2 mm	:	200
0252611751	CLI C 1-3 GE/SW = MP	Yellow	3 / 4.2 mm	=	200
0252611752	CLI C 1-3 GE/SW AC MP	Yellow	3 / 4.2 mm	AC	200
0252611746	CLI C 1-3 GE/SW ET MP	Yellow	3 / 4.2 mm	⏚	200
0252611747	CLI C 1-3 GE/SW PET. MP	Yellow	3 / 4.2 mm	⏚	200
0252611697	CLI C 1-3 GE/SW Ä MP	Yellow	3 / 4.2 mm	Ä	200
0252611699	CLI C 1-3 GE/SW Å MP	Yellow	3 / 4.2 mm	Å	200
0252611695	CLI C 1-3 GE/SW Ö MP	Yellow	3 / 4.2 mm	Ö	200
0252611741	CLI C 1-3 BL/SW - MP	Blue	3 / 4.2 mm	-	200
0252611664	CLI C 1-3 BL/SW N MP	Blue	3 / 4.2 mm	N	200
0252611737	CLI C 1-3 RT/SW + MP	Red	3 / 4.2 mm	+	200

CLI C 1-3 International colour code (CD)

Technical data

Material	Fire class acc. to UL 94	Temperature range	Conductor O.D.	Version
PVC, soft, without Cadmium	V-0	-30 °C...80 °C	1 - 5 mm	CD

Ordering data

Order No.	Type		Colour	Length / Width	Printing	Qty.
1568251503	CLI C 1-3 SW/WS 0 CD	●	Black	3 / 4.2 mm	0	500
1568251506	CLI C 1-3 BR/WS 1 CD	●	Brown	3 / 4.2 mm	1	500
1568251509	CLI C 1-3 RT/SW 2 CD	●	Red	3 / 4.2 mm	2	500
1568251512	CLI C 1-3 OR/SW 3 CD	●	Orange	3 / 4.2 mm	3	500
1568251514	CLI C 1-3 GE/SW 4 CD	●	Yellow	3 / 4.2 mm	4	500
1568251518	CLI C 1-3 GN/SW 5 CD	●	Green	3 / 4.2 mm	5	500
1568251521	CLI C 1-3 BL/SW 6 CD	●	Blue	3 / 4.2 mm	6	500
1568251524	CLI C 1-3 VI/SW 7 CD	●	Violet	3 / 4.2 mm	7	500
1568251527	CLI C 1-3 GR/SW 8 CD	●	Grey	3 / 4.2 mm	8	500
1568251530	CLI C 1-3 WS/SW 9 CD	○	White	3 / 4.2 mm	9	500

CLI C 1-3 Numeric sequence (CD)

Technical data

Material	Fire class acc. to UL 94	Temperature range	Conductor O.D.	Version
PVC, soft, without Cadmium	V-0	-30 °C...80 °C	1 - 5 mm	CD

Ordering data

Order No.	Type		Colour	Length / Width	Printing	Qty.
1568251502	CLI C 1-3 GE/SW 0 CD	●	Yellow	3 / 4.2 mm	0	500
1568251000	CLI C 1-3 WS/SW 0 CD	○	White	3 / 4.2 mm	0	500
1568251505	CLI C 1-3 GE/SW 1 CD	●	Yellow	3 / 4.2 mm	1	500
1568250001	CLI C 1-3 WS/SW 1 CD	○	White	3 / 4.2 mm	1	500
1568251508	CLI C 1-3 GE/SW 2 CD	●	Yellow	3 / 4.2 mm	2	500
1568250002	CLI C 1-3 WS/SW 2 CD	○	White	3 / 4.2 mm	2	500
1568251511	CLI C 1-3 GE/SW 3 CD	●	Yellow	3 / 4.2 mm	3	500
1568250003	CLI C 1-3 WS/SW 3 CD	○	White	3 / 4.2 mm	3	500
1568251514	CLI C 1-3 GE/SW 4 CD	●	Yellow	3 / 4.2 mm	4	500
1568250004	CLI C 1-3 WS/SW 4 CD	○	White	3 / 4.2 mm	4	500
1568251517	CLI C 1-3 GE/SW 5 CD	●	Yellow	3 / 4.2 mm	5	500
1568250005	CLI C 1-3 WS/SW 5 CD	○	White	3 / 4.2 mm	5	500
1568251520	CLI C 1-3 GE/SW 6 CD	●	Yellow	3 / 4.2 mm	6	500
1568250006	CLI C 1-3 WS/SW 6 CD	○	White	3 / 4.2 mm	6	500
1568251523	CLI C 1-3 GE/SW 7 CD	●	Yellow	3 / 4.2 mm	7	500
1568250007	CLI C 1-3 WS/SW 7 CD	○	White	3 / 4.2 mm	7	500
1568251526	CLI C 1-3 GE/SW 8 CD	●	Yellow	3 / 4.2 mm	8	500
1568250008	CLI C 1-3 WS/SW 8 CD	○	White	3 / 4.2 mm	8	500
1568251529	CLI C 1-3 GE/SW 9 CD	●	Yellow	3 / 4.2 mm	9	500
1568251530	CLI C 1-3 WS/SW 9 CD	○	White	3 / 4.2 mm	9	500

CLI C 1-3 Alphabetic (CD)

Technical data

Material	Fire class acc. to UL 94	Temperature range	Conductor O.D.	Version
PVC, soft, without Cadmium	V-0	-30 °C...80 °C	1 - 5 mm	CD

Ordering data

Order No.	Type		Colour	Length / Width	Printing	Qty.
1568251637	CLI C 1-3 GE/SW A CD	●	Yellow	3 / 4.2 mm	A	500
1568251021	CLI C 1-3 WS/SW A CD	❍	White	3 / 4.2 mm	A	500
1568251639	CLI C 1-3 GE/SW B CD	●	Yellow	3 / 4.2 mm	B	500
1568251022	CLI C 1-3 WS/SW B CD	❍	White	3 / 4.2 mm	B	500
1568251641	CLI C 1-3 GE/SW C CD	●	Yellow	3 / 4.2 mm	C	500
1568251023	CLI C 1-3 WS/SW C CD	❍	White	3 / 4.2 mm	C	500
1568251643	CLI C 1-3 GE/SW D CD	●	Yellow	3 / 4.2 mm	D	500
1568251024	CLI C 1-3 WS/SW D CD	❍	White	3 / 4.2 mm	D	500
1568251645	CLI C 1-3 GE/SW E CD	●	Yellow	3 / 4.2 mm	E	500
1568251025	CLI C 1-3 WS/SW E CD	❍	White	3 / 4.2 mm	E	500
1568251647	CLI C 1-3 GE/SW F CD	●	Yellow	3 / 4.2 mm	F	500
1568251026	CLI C 1-3 WS/SW F CD	❍	White	3 / 4.2 mm	F	500
1568251649	CLI C 1-3 GE/SW G CD	●	Yellow	3 / 4.2 mm	G	500
1568251027	CLI C 1-3 WS/SW G CD	❍	White	3 / 4.2 mm	G	500
1568251651	CLI C 1-3 GE/SW H CD	●	Yellow	3 / 4.2 mm	H	500
1568251028	CLI C 1-3 WS/SW H CD	❍	White	3 / 4.2 mm	H	500
1568251653	CLI C 1-3 GE/SW I CD	●	Yellow	3 / 4.2 mm	I	500
1568251029	CLI C 1-3 WS/SW I CD	❍	White	3 / 4.2 mm	I	500
1568251655	CLI C 1-3 GE/SW J CD	●	Yellow	3 / 4.2 mm	J	500
1568251030	CLI C 1-3 WS/SW J CD	❍	White	3 / 4.2 mm	J	500
1568251657	CLI C 1-3 GE/SW K CD	●	Yellow	3 / 4.2 mm	K	500
1568251031	CLI C 1-3 WS/SW K CD	❍	White	3 / 4.2 mm	K	500
1568251659	CLI C 1-3 GE/SW L CD	●	Yellow	3 / 4.2 mm	L	500
1568251032	CLI C 1-3 WS/SW L CD	❍	White	3 / 4.2 mm	L	500
1568251661	CLI C 1-3 GE/SW M CD	●	Yellow	3 / 4.2 mm	M	500
1568251033	CLI C 1-3 WS/SW M CD	❍	White	3 / 4.2 mm	M	500
1568251663	CLI C 1-3 GE/SW N CD	●	Yellow	3 / 4.2 mm	N	500
1568251034	CLI C 1-3 WS/SW N CD	❍	White	3 / 4.2 mm	N	500
1568251665	CLI C 1-3 GE/SW O CD	●	Yellow	3 / 4.2 mm	O	500
1568251035	CLI C 1-3 WS/SW O CD	❍	White	3 / 4.2 mm	O	500
1568251667	CLI C 1-3 GE/SW P CD	●	Yellow	3 / 4.2 mm	P	500
1568251036	CLI C 1-3 WS/SW P CD	❍	White	3 / 4.2 mm	P	500
1568251669	CLI C 1-3 GE/SW Q CD	●	Yellow	3 / 4.2 mm	Q	500
1568251037	CLI C 1-3 WS/SW Q CD	❍	White	3 / 4.2 mm	Q	500
1568251671	CLI C 1-3 GE/SW R CD	●	Yellow	3 / 4.2 mm	R	500
1568251038	CLI C 1-3 WS/SW R CD	❍	White	3 / 4.2 mm	R	500
1568251673	CLI C 1-3 GE/SW S CD	●	Yellow	3 / 4.2 mm	S	500
1568251039	CLI C 1-3 WS/SW S CD	❍	White	3 / 4.2 mm	S	500
1568251676	CLI C 1-3 GE/SW T CD	●	Yellow	3 / 4.2 mm	T	500
1568251040	CLI C 1-3 WS/SW T CD	❍	White	3 / 4.2 mm	T	500
1568251679	CLI C 1-3 GE/SW U CD	●	Yellow	3 / 4.2 mm	U	500
1568251041	CLI C 1-3 WS/SW U CD	❍	White	3 / 4.2 mm	U	500
1568251681	CLI C 1-3 GE/SW V CD	●	Yellow	3 / 4.2 mm	V	500
1568251042	CLI C 1-3 WS/SW V CD	❍	White	3 / 4.2 mm	V	500
1568251683	CLI C 1-3 GE/SW W CD	●	Yellow	3 / 4.2 mm	W	500
1568251043	CLI C 1-3 WS/SW W CD	❍	White	3 / 4.2 mm	W	500
1568251687	CLI C 1-3 GE/SW X CD	●	Yellow	3 / 4.2 mm	X	500
1568251054	CLI C 1-3 WS/SW X CD	❍	White	3 / 4.2 mm	X	500
1568251696	CLI C 1-3 GE/SW Y CD	●	Yellow	3 / 4.2 mm	Y	500
1568251045	CLI C 1-3 WS/SW Y CD	❍	White	3 / 4.2 mm	Y	500
1568251698	CLI C 1-3 GE/SW Z CD	●	Yellow	3 / 4.2 mm	Z	500
1568251046	CLI C 1-3 WS/SW Z CD	❍	White	3 / 4.2 mm	Z	500

CLI C 1-3 Special characters (CD)

Technical data

Material	Fire class acc. to UL 94	Temperature range	Conductor O.D.	Version
PVC, soft, without Cadmium	V-0	-30 °C...80 °C	1 - 5 mm	CD

Ordering data

Order No.	Type		Colour	Length / Width	Printing	Qty.
1568251753	CLI C 1-3 GE/SW * CD	●	Yellow	3 / 4.2 mm	*	500
1568251738	CLI C 1-3 GE/SW + CD	●	Yellow	3 / 4.2 mm	+	500
1568251048	CLI C 1-3 WS/SW + CD	❍	White	3 / 4.2 mm	+	500
1568251740	CLI C 1-3 GE/SW - CD	●	Yellow	3 / 4.2 mm	-	500
1568251049	CLI C 1-3 WS/SW - CD	❍	White	3 / 4.2 mm	-	500
1568251748	CLI C 1-3 GE/SW . CD	●	Yellow	3 / 4.2 mm	.	500
1568251047	CLI C 1-3 WS/SW . CD	❍	White	3 / 4.2 mm	.	500
1568251742	CLI C 1-3 GE/SW / CD	●	Yellow	3 / 4.2 mm	/	500
1568251050	CLI C 1-3 WS/SW / CD	❍	White	3 / 4.2 mm	/	500
1568251750	CLI C 1-3 GE/SW : CD	●	Yellow	3 / 4.2 mm	:	500
1568251051	CLI C 1-3 WS/SW : CD	❍	White	3 / 4.2 mm	:	500
1568251751	CLI C 1-3 GE/SW = CD	●	Yellow	3 / 4.2 mm	=	500
1568251052	CLI C 1-3 WS/SW = CD	❍	White	3 / 4.2 mm	=	500
1568251752	CLI C 1-3 GE/SW AC CD	●	Yellow	3 / 4.2 mm	AC	500
1568251746	CLI C 1-3 GE/SW ET CD	●	Yellow	3 / 4.2 mm	⏚	500
1568251053	CLI C 1-3 WS/SW ET CD	❍	White	3 / 4.2 mm	⏚	500
1568251747	CLI C 1-3 GE/SW PET. CD	●	Yellow	3 / 4.2 mm	⏚	500
1568251058	CLI C 1-3 WS/SW PET. CD	❍	White	3 / 4.2 mm	⏚	500
1568251797	CLI C 1-3 GE/SW Ä CD	●	Yellow	3 / 4.2 mm	Ä	500
1568251055	CLI C 1-3 WS/SW ? CD	❍	White	3 / 4.2 mm	?	500
1568251799	CLI C 1-3 GE/SW Å CD	●	Yellow	3 / 4.2 mm	Å	500
1568251735	CLI C 1-3 GE/SW Æ CD	●	Yellow	3 / 4.2 mm	Æ	500
1568251795	CLI C 1-3 GE/SW Ö CD	●	Yellow	3 / 4.2 mm	Ö	500
1568251057	CLI C 1-3 WS/SW Ö CD	❍	White	3 / 4.2 mm	Ö	500
1568251736	CLI C 1-3 GE/SW Ø CD	●	Yellow	3 / 4.2 mm	Ø	500
1568251741	CLI C 1-3 BL/SW - CD	●	Blue	3 / 4.2 mm	-	500
1568251664	CLI C 1-3 BL/SW N CD	●	Blue	3 / 4.2 mm	N	500
1568251737	CLI C 1-3 RT/SW + CD	●	Red	3 / 4.2 mm	+	500

CLI C 1-6 Numeric sequence (MultiPack)

Technical data

Material	Fire class acc. to UL 94	Temperature range	Conductor O.D.	Version
PVC, soft, without Cadmium	V-0	-30 °C...80 °C	3 - 5 mm	MultiPack

Ordering data

Order No.	Type	Colour	Length / Width	Printing	Qty.
0252711522	CLI C 1-6 GE/SW 01 MP	Yellow	6 / 4.2 mm	01	100
0252711523	CLI C 1-6 GE/SW 02 MP	Yellow	6 / 4.2 mm	02	100
0252711524	CLI C 1-6 GE/SW 03 MP	Yellow	6 / 4.2 mm	03	100
0252711525	CLI C 1-6 GE/SW 04 MP	Yellow	6 / 4.2 mm	04	100
0252711526	CLI C 1-6 GE/SW 05 MP	Yellow	6 / 4.2 mm	05	100
0252711527	CLI C 1-6 GE/SW 06 MP	Yellow	6 / 4.2 mm	06	100
0252711528	CLI C 1-6 GE/SW 07 MP	Yellow	6 / 4.2 mm	07	100
0252711529	CLI C 1-6 GE/SW 08 MP	Yellow	6 / 4.2 mm	08	100
0252711530	CLI C 1-6 GE/SW 09 MP	Yellow	6 / 4.2 mm	09	100
0252711531	CLI C 1-6 GE/SW 10 MP	Yellow	6 / 4.2 mm	10	100
0252711532	CLI C 1-6 GE/SW 11 MP	Yellow	6 / 4.2 mm	11	100
0252711533	CLI C 1-6 GE/SW 12 MP	Yellow	6 / 4.2 mm	12	100
0252711534	CLI C 1-6 GE/SW 13 MP	Yellow	6 / 4.2 mm	13	100
0252711535	CLI C 1-6 GE/SW 14 MP	Yellow	6 / 4.2 mm	14	100
0252711536	CLI C 1-6 GE/SW 15 MP	Yellow	6 / 4.2 mm	15	100
0252711537	CLI C 1-6 GE/SW 16 MP	Yellow	6 / 4.2 mm	16	100
0252711538	CLI C 1-6 GE/SW 17 MP	Yellow	6 / 4.2 mm	17	100
0252711539	CLI C 1-6 GE/SW 18 MP	Yellow	6 / 4.2 mm	18	100
0252711540	CLI C 1-6 GE/SW 19 MP	Yellow	6 / 4.2 mm	19	100
0252711541	CLI C 1-6 GE/SW 20 MP	Yellow	6 / 4.2 mm	20	100
0252711542	CLI C 1-6 GE/SW 21 MP	Yellow	6 / 4.2 mm	21	100
0252711543	CLI C 1-6 GE/SW 22 MP	Yellow	6 / 4.2 mm	22	100
0252711544	CLI C 1-6 GE/SW 23 MP	Yellow	6 / 4.2 mm	23	100
0252711545	CLI C 1-6 GE/SW 24 MP	Yellow	6 / 4.2 mm	24	100
0252711546	CLI C 1-6 GE/SW 25 MP	Yellow	6 / 4.2 mm	25	100
0252711547	CLI C 1-6 GE/SW 26 MP	Yellow	6 / 4.2 mm	26	100
0252711548	CLI C 1-6 GE/SW 27 MP	Yellow	6 / 4.2 mm	27	100
0252711549	CLI C 1-6 GE/SW 28 MP	Yellow	6 / 4.2 mm	28	100
0252711550	CLI C 1-6 GE/SW 29 MP	Yellow	6 / 4.2 mm	29	100
0252711551	CLI C 1-6 GE/SW 30 MP	Yellow	6 / 4.2 mm	30	100
0252711552	CLI C 1-6 GE/SW 31 MP	Yellow	6 / 4.2 mm	31	100
0252711553	CLI C 1-6 GE/SW 32 MP	Yellow	6 / 4.2 mm	32	100
0252711554	CLI C 1-6 GE/SW 33 MP	Yellow	6 / 4.2 mm	33	100
0252711555	CLI C 1-6 GE/SW 34 MP	Yellow	6 / 4.2 mm	34	100
0252711556	CLI C 1-6 GE/SW 35 MP	Yellow	6 / 4.2 mm	35	100
0252711557	CLI C 1-6 GE/SW 36 MP	Yellow	6 / 4.2 mm	36	100
0252711558	CLI C 1-6 GE/SW 37 MP	Yellow	6 / 4.2 mm	37	100
0252711559	CLI C 1-6 GE/SW 38 MP	Yellow	6 / 4.2 mm	38	100
0252711560	CLI C 1-6 GE/SW 39 MP	Yellow	6 / 4.2 mm	39	100
0252711561	CLI C 1-6 GE/SW 40 MP	Yellow	6 / 4.2 mm	40	100
0252711562	CLI C 1-6 GE/SW 41 MP	Yellow	6 / 4.2 mm	41	100
0252711563	CLI C 1-6 GE/SW 42 MP	Yellow	6 / 4.2 mm	42	100
0252711564	CLI C 1-6 GE/SW 43 MP	Yellow	6 / 4.2 mm	43	100
0252711565	CLI C 1-6 GE/SW 44 MP	Yellow	6 / 4.2 mm	44	100
0252711566	CLI C 1-6 GE/SW 45 MP	Yellow	6 / 4.2 mm	45	100
0252711567	CLI C 1-6 GE/SW 46 MP	Yellow	6 / 4.2 mm	46	100
0252711568	CLI C 1-6 GE/SW 47 MP	Yellow	6 / 4.2 mm	47	100
0252711569	CLI C 1-6 GE/SW 48 MP	Yellow	6 / 4.2 mm	48	100
0252711570	CLI C 1-6 GE/SW 49 MP	Yellow	6 / 4.2 mm	49	100
0252711571	CLI C 1-6 GE/SW 50 MP	Yellow	6 / 4.2 mm	50	100
0252711572	CLI C 1-6 GE/SW 51 MP	Yellow	6 / 4.2 mm	51	100
0252711573	CLI C 1-6 GE/SW 52 MP	Yellow	6 / 4.2 mm	52	100
0252711574	CLI C 1-6 GE/SW 53 MP	Yellow	6 / 4.2 mm	53	100
0252711575	CLI C 1-6 GE/SW 54 MP	Yellow	6 / 4.2 mm	54	100
0252711576	CLI C 1-6 GE/SW 55 MP	Yellow	6 / 4.2 mm	55	100
0252711577	CLI C 1-6 GE/SW 56 MP	Yellow	6 / 4.2 mm	56	100
0252711578	CLI C 1-6 GE/SW 57 MP	Yellow	6 / 4.2 mm	57	100
0252711579	CLI C 1-6 GE/SW 58 MP	Yellow	6 / 4.2 mm	58	100
0252711580	CLI C 1-6 GE/SW 59 MP	Yellow	6 / 4.2 mm	59	100
0252711581	CLI C 1-6 GE/SW 60 MP	Yellow	6 / 4.2 mm	60	100

CableLine® – CLI C – closed wire markers

CLI C 1-6 Numeric sequence (MultiPack)

Technical data

Material	Fire class acc. to UL 94	Temperature range	Conductor O.D.	Version
PVC, soft, without Cadmium	V-0	-30 °C...80 °C	3 - 5 mm	MultiPack

Ordering data

Order No.	Type	Colour	Length / Width	Printing	Qty.
0252711582	CLI C 1-6 GE/SW 61 MP	Yellow	6 / 4.2 mm	61	100
0252711583	CLI C 1-6 GE/SW 62 MP	Yellow	6 / 4.2 mm	62	100
0252711584	CLI C 1-6 GE/SW 63 MP	Yellow	6 / 4.2 mm	63	100
0252711585	CLI C 1-6 GE/SW 64 MP	Yellow	6 / 4.2 mm	64	100
0252711586	CLI C 1-6 GE/SW 65 MP	Yellow	6 / 4.2 mm	65	100
0252711587	CLI C 1-6 GE/SW 66 MP	Yellow	6 / 4.2 mm	66	100
0252711588	CLI C 1-6 GE/SW 67 MP	Yellow	6 / 4.2 mm	67	100
0252711589	CLI C 1-6 GE/SW 68 MP	Yellow	6 / 4.2 mm	68	100
0252711590	CLI C 1-6 GE/SW 69 MP	Yellow	6 / 4.2 mm	69	100
0252711591	CLI C 1-6 GE/SW 70 MP	Yellow	6 / 4.2 mm	70	100
0252711592	CLI C 1-6 GE/SW 71 MP	Yellow	6 / 4.2 mm	71	100
0252711593	CLI C 1-6 GE/SW 72 MP	Yellow	6 / 4.2 mm	72	100
0252711594	CLI C 1-6 GE/SW 73 MP	Yellow	6 / 4.2 mm	73	100
0252711595	CLI C 1-6 GE/SW 74 MP	Yellow	6 / 4.2 mm	74	100
0252711596	CLI C 1-6 GE/SW 75 MP	Yellow	6 / 4.2 mm	75	100
0252711597	CLI C 1-6 GE/SW 76 MP	Yellow	6 / 4.2 mm	76	100
0252711598	CLI C 1-6 GE/SW 77 MP	Yellow	6 / 4.2 mm	77	100
0252711599	CLI C 1-6 GE/SW 78 MP	Yellow	6 / 4.2 mm	78	100
0252711600	CLI C 1-6 GE/SW 79 MP	Yellow	6 / 4.2 mm	79	100
0252711601	CLI C 1-6 GE/SW 80 MP	Yellow	6 / 4.2 mm	80	100
0252711602	CLI C 1-6 GE/SW 81 MP	Yellow	6 / 4.2 mm	81	100
0252711603	CLI C 1-6 GE/SW 82 MP	Yellow	6 / 4.2 mm	82	100
0252711604	CLI C 1-6 GE/SW 83 MP	Yellow	6 / 4.2 mm	83	100
0252711605	CLI C 1-6 GE/SW 84 MP	Yellow	6 / 4.2 mm	84	100
0252711606	CLI C 1-6 GE/SW 85 MP	Yellow	6 / 4.2 mm	85	100
0252711607	CLI C 1-6 GE/SW 86 MP	Yellow	6 / 4.2 mm	86	100
0252711608	CLI C 1-6 GE/SW 87 MP	Yellow	6 / 4.2 mm	87	100
0252711609	CLI C 1-6 GE/SW 88 MP	Yellow	6 / 4.2 mm	88	100
0252711610	CLI C 1-6 GE/SW 89 MP	Yellow	6 / 4.2 mm	89	100
0252711611	CLI C 1-6 GE/SW 90 MP	Yellow	6 / 4.2 mm	90	100
0252711612	CLI C 1-6 GE/SW 91 MP	Yellow	6 / 4.2 mm	91	100
0252711613	CLI C 1-6 GE/SW 92 MP	Yellow	6 / 4.2 mm	92	100
0252711614	CLI C 1-6 GE/SW 93 MP	Yellow	6 / 4.2 mm	93	100
0252711615	CLI C 1-6 GE/SW 94 MP	Yellow	6 / 4.2 mm	94	100
0252711616	CLI C 1-6 GE/SW 95 MP	Yellow	6 / 4.2 mm	95	100
0252711617	CLI C 1-6 GE/SW 96 MP	Yellow	6 / 4.2 mm	96	100
0252711618	CLI C 1-6 GE/SW 97 MP	Yellow	6 / 4.2 mm	97	100
0252711619	CLI C 1-6 GE/SW 98 MP	Yellow	6 / 4.2 mm	98	100
0252711620	CLI C 1-6 GE/SW 99 MP	Yellow	6 / 4.2 mm	99	100

CLI C 1-6 Special characters (MultiPack)

Technical data

Material	Fire class acc. to UL 94	Temperature range	Conductor O.D.	Version
PVC, soft, without Cadmium	V-0	-30 °C...80 °C	3 - 5 mm	MultiPack

Ordering data

Order No.	Type	Colour	Length / Width	Printing	Qty.
0252711726	CLI C 1-6 GE/SW A1 MP	Yellow	6 / 4.2 mm	A1	100
0252711727	CLI C 1-6 GE/SW A2 MP	Yellow	6 / 4.2 mm	A2	100
0252711728	CLI C 1-6 GE/SW L1 MP	Yellow	6 / 4.2 mm	L1	100
0252711729	CLI C 1-6 GE/SW L2 MP	Yellow	6 / 4.2 mm	L2	100
0252711730	CLI C 1-6 GE/SW L3 MP	Yellow	6 / 4.2 mm	L3	100
0252711733	CLI C 1-6 GE/SW PE MP	Yellow	6 / 4.2 mm	PE	100

CLI C 1-9 Special characters (MultiPack)

Technical data

Material	Fire class acc. to UL 94	Temperature range	Conductor O.D.	Version
PVC, soft, without Cadmium	V-0	-30 °C...80 °C	3 - 5 mm	MultiPack

Ordering data

Order No.	Type	Colour	Length / Width	Printing	Qty.
0252711734	CLI C 1-9 GE/SW PEN MP	Yellow	9 / 4.2 mm	PEN	100

CLI C 1-6 Numeric sequence (CD)

Technical data

Material	Fire class acc. to UL 94	Temperature range	Conductor O.D.	Version
PVC, soft, without Cadmium	V-0	-30 °C...80 °C	3 - 5 mm	CD

Ordering data

Order No.	Type	Colour	Length / Width	Printing	Qty.
1868811522	CLI C 1-6 GE/SW 01 CD	Yellow	6 / 4.2 mm	01	250
1868811523	CLI C 1-6 GE/SW 02 CD	Yellow	6 / 4.2 mm	02	250
1868811524	CLI C 1-6 GE/SW 03 CD	Yellow	6 / 4.2 mm	03	250
1868811525	CLI C 1-6 GE/SW 04 CD	Yellow	6 / 4.2 mm	04	250
1868811526	CLI C 1-6 GE/SW 05 CD	Yellow	6 / 4.2 mm	05	250
1868811527	CLI C 1-6 GE/SW 06 CD	Yellow	6 / 4.2 mm	06	250
1868811528	CLI C 1-6 GE/SW 07 CD	Yellow	6 / 4.2 mm	07	250
1868811529	CLI C 1-6 GE/SW 08 CD	Yellow	6 / 4.2 mm	08	250
1868811530	CLI C 1-6 GE/SW 09 CD	Yellow	6 / 4.2 mm	09	250
1868811531	CLI C 1-6 GE/SW 10 CD	Yellow	6 / 4.2 mm	10	250
1868811532	CLI C 1-6 GE/SW 11 CD	Yellow	6 / 4.2 mm	11	250
1868811533	CLI C 1-6 GE/SW 12 CD	Yellow	6 / 4.2 mm	12	250
1868811534	CLI C 1-6 GE/SW 13 CD	Yellow	6 / 4.2 mm	13	250
1868811535	CLI C 1-6 GE/SW 14 CD	Yellow	6 / 4.2 mm	14	250
1868811536	CLI C 1-6 GE/SW 15 CD	Yellow	6 / 4.2 mm	15	250
1868811537	CLI C 1-6 GE/SW 16 CD	Yellow	6 / 4.2 mm	16	250
1868811538	CLI C 1-6 GE/SW 17 CD	Yellow	6 / 4.2 mm	17	250
1868811539	CLI C 1-6 GE/SW 18 CD	Yellow	6 / 4.2 mm	18	250
1868811540	CLI C 1-6 GE/SW 19 CD	Yellow	6 / 4.2 mm	19	250
1868811541	CLI C 1-6 GE/SW 20 CD	Yellow	6 / 4.2 mm	20	250
1868811542	CLI C 1-6 GE/SW 21 CD	Yellow	6 / 4.2 mm	21	250
1868811543	CLI C 1-6 GE/SW 22 CD	Yellow	6 / 4.2 mm	22	250
1868811544	CLI C 1-6 GE/SW 23 CD	Yellow	6 / 4.2 mm	23	250
1868811545	CLI C 1-6 GE/SW 24 CD	Yellow	6 / 4.2 mm	24	250
1868811546	CLI C 1-6 GE/SW 25 CD	Yellow	6 / 4.2 mm	25	250
1868811547	CLI C 1-6 GE/SW 26 CD	Yellow	6 / 4.2 mm	26	250
1868811548	CLI C 1-6 GE/SW 27 CD	Yellow	6 / 4.2 mm	27	250
1868811549	CLI C 1-6 GE/SW 28 CD	Yellow	6 / 4.2 mm	28	250
1868811550	CLI C 1-6 GE/SW 29 CD	Yellow	6 / 4.2 mm	29	250
1868811551	CLI C 1-6 GE/SW 30 CD	Yellow	6 / 4.2 mm	30	250
1868811552	CLI C 1-6 GE/SW 31 CD	Yellow	6 / 4.2 mm	31	250
1868811553	CLI C 1-6 GE/SW 32 CD	Yellow	6 / 4.2 mm	32	250
1868811554	CLI C 1-6 GE/SW 33 CD	Yellow	6 / 4.2 mm	33	250
1868811555	CLI C 1-6 GE/SW 34 CD	Yellow	6 / 4.2 mm	34	250
1868811556	CLI C 1-6 GE/SW 35 CD	Yellow	6 / 4.2 mm	35	250
1868811557	CLI C 1-6 GE/SW 36 CD	Yellow	6 / 4.2 mm	36	250
1868811558	CLI C 1-6 GE/SW 37 CD	Yellow	6 / 4.2 mm	37	250
1868811559	CLI C 1-6 GE/SW 38 CD	Yellow	6 / 4.2 mm	38	250
1868811560	CLI C 1-6 GE/SW 39 CD	Yellow	6 / 4.2 mm	39	250
1868811561	CLI C 1-6 GE/SW 40 CD	Yellow	6 / 4.2 mm	40	250
1868811562	CLI C 1-6 GE/SW 41 CD	Yellow	6 / 4.2 mm	41	250
1868811563	CLI C 1-6 GE/SW 42 CD	Yellow	6 / 4.2 mm	42	250
1868811564	CLI C 1-6 GE/SW 43 CD	Yellow	6 / 4.2 mm	43	250
1868811565	CLI C 1-6 GE/SW 44 CD	Yellow	6 / 4.2 mm	44	250
1868811566	CLI C 1-6 GE/SW 45 CD	Yellow	6 / 4.2 mm	45	250
1868811567	CLI C 1-6 GE/SW 46 CD	Yellow	6 / 4.2 mm	46	250
1868811568	CLI C 1-6 GE/SW 47 CD	Yellow	6 / 4.2 mm	47	250
1868811569	CLI C 1-6 GE/SW 48 CD	Yellow	6 / 4.2 mm	48	250
1868811570	CLI C 1-6 GE/SW 49 CD	Yellow	6 / 4.2 mm	49	250
1868811571	CLI C 1-6 GE/SW 50 CD	Yellow	6 / 4.2 mm	50	250

CLI C 1-6 Numeric sequence (CD)

Technical data

Material	Fire class acc. to UL 94	Temperature range	Conductor O.D.	Version
PVC, soft, without Cadmium	V-0	-30 °C...80 °C	3 - 5 mm	CD

Ordering data

Order No.	Type		Colour	Length / Width	Printing	Qty.
1868811572	CLI C 1-6 GE/SW 51 CD	●	Yellow	6 / 4.2 mm	51	250
1868811573	CLI C 1-6 GE/SW 52 CD	●	Yellow	6 / 4.2 mm	52	250
1868811574	CLI C 1-6 GE/SW 53 CD	●	Yellow	6 / 4.2 mm	53	250
1868811575	CLI C 1-6 GE/SW 54 CD	●	Yellow	6 / 4.2 mm	54	250
1868811576	CLI C 1-6 GE/SW 55 CD	●	Yellow	6 / 4.2 mm	55	250
1868811577	CLI C 1-6 GE/SW 56 CD	●	Yellow	6 / 4.2 mm	56	250
1868811578	CLI C 1-6 GE/SW 57 CD	●	Yellow	6 / 4.2 mm	57	250
1868811579	CLI C 1-6 GE/SW 58 CD	●	Yellow	6 / 4.2 mm	58	250
1868811580	CLI C 1-6 GE/SW 59 CD	●	Yellow	6 / 4.2 mm	59	250
1868811581	CLI C 1-6 GE/SW 60 CD	●	Yellow	6 / 4.2 mm	60	250
1868811582	CLI C 1-6 GE/SW 61 CD	●	Yellow	6 / 4.2 mm	61	250
1868811583	CLI C 1-6 GE/SW 62 CD	●	Yellow	6 / 4.2 mm	62	250
1868811584	CLI C 1-6 GE/SW 63 CD	●	Yellow	6 / 4.2 mm	63	250
1868811585	CLI C 1-6 GE/SW 64 CD	●	Yellow	6 / 4.2 mm	64	250
1868811586	CLI C 1-6 GE/SW 65 CD	●	Yellow	6 / 4.2 mm	65	250
1868811587	CLI C 1-6 GE/SW 66 CD	●	Yellow	6 / 4.2 mm	66	250
1868811588	CLI C 1-6 GE/SW 67 CD	●	Yellow	6 / 4.2 mm	67	250
1868811589	CLI C 1-6 GE/SW 68 CD	●	Yellow	6 / 4.2 mm	68	250
1868811590	CLI C 1-6 GE/SW 69 CD	●	Yellow	6 / 4.2 mm	69	250
1868811591	CLI C 1-6 GE/SW 70 CD	●	Yellow	6 / 4.2 mm	70	250
1868811592	CLI C 1-6 GE/SW 71 CD	●	Yellow	6 / 4.2 mm	71	250
1868811593	CLI C 1-6 GE/SW 72 CD	●	Yellow	6 / 4.2 mm	72	250
1868811594	CLI C 1-6 GE/SW 73 CD	●	Yellow	6 / 4.2 mm	73	250
1868811595	CLI C 1-6 GE/SW 74 CD	●	Yellow	6 / 4.2 mm	74	250
1868811596	CLI C 1-6 GE/SW 75 CD	●	Yellow	6 / 4.2 mm	75	250
1868811597	CLI C 1-6 GE/SW 76 CD	●	Yellow	6 / 4.2 mm	76	250
1868811598	CLI C 1-6 GE/SW 77 CD	●	Yellow	6 / 4.2 mm	77	250
1868811599	CLI C 1-6 GE/SW 78 CD	●	Yellow	6 / 4.2 mm	78	250
1868811600	CLI C 1-6 GE/SW 79 CD	●	Yellow	6 / 4.2 mm	79	250
1868811601	CLI C 1-6 GE/SW 80 CD	●	Yellow	6 / 4.2 mm	80	250
1868811602	CLI C 1-6 GE/SW 81 CD	●	Yellow	6 / 4.2 mm	81	250
1868811603	CLI C 1-6 GE/SW 82 CD	●	Yellow	6 / 4.2 mm	82	250
1868811604	CLI C 1-6 GE/SW 83 CD	●	Yellow	6 / 4.2 mm	83	250
1868811605	CLI C 1-6 GE/SW 84 CD	●	Yellow	6 / 4.2 mm	84	250
1868811606	CLI C 1-6 GE/SW 85 CD	●	Yellow	6 / 4.2 mm	85	250
1868811607	CLI C 1-6 GE/SW 86 CD	●	Yellow	6 / 4.2 mm	86	250
1868811608	CLI C 1-6 GE/SW 87 CD	●	Yellow	6 / 4.2 mm	87	250
1868811609	CLI C 1-6 GE/SW 88 CD	●	Yellow	6 / 4.2 mm	88	250
1868811610	CLI C 1-6 GE/SW 89 CD	●	Yellow	6 / 4.2 mm	89	250
1868811611	CLI C 1-6 GE/SW 90 CD	●	Yellow	6 / 4.2 mm	90	250
1868811612	CLI C 1-6 GE/SW 91 CD	●	Yellow	6 / 4.2 mm	91	250
1868811613	CLI C 1-6 GE/SW 92 CD	●	Yellow	6 / 4.2 mm	92	250
1868811614	CLI C 1-6 GE/SW 93 CD	●	Yellow	6 / 4.2 mm	93	250
1868811615	CLI C 1-6 GE/SW 94 CD	●	Yellow	6 / 4.2 mm	94	250
1868811616	CLI C 1-6 GE/SW 95 CD	●	Yellow	6 / 4.2 mm	95	250
1868811617	CLI C 1-6 GE/SW 96 CD	●	Yellow	6 / 4.2 mm	96	250
1868811618	CLI C 1-6 GE/SW 97 CD	●	Yellow	6 / 4.2 mm	97	250
1868811619	CLI C 1-6 GE/SW 98 CD	●	Yellow	6 / 4.2 mm	98	250
1868811620	CLI C 1-6 GE/SW 99 CD	●	Yellow	6 / 4.2 mm	99	250

CLI C 1-6 Special characters (CD)

Technical data

Material	Fire class acc. to UL 94	Temperature range	Conductor O.D.	Version
PVC, soft, without Cadmium	V-0	-30 °C...80 °C	3 - 5 mm	CD

Ordering data

Order No.	Type	Colour	Length / Width	Printing	Qty.
1868811726	CLI C 1-6 GE/SW A1 CD	Yellow	6 / 4.2 mm	A1	250
1868811727	CLI C 1-6 GE/SW A2 CD	Yellow	6 / 4.2 mm	A2	250
1868811739	CLI C 1-6 GE/SW I1 CD	Yellow	6 / 4.2 mm	I1	250
1868811740	CLI C 1-6 GE/SW I2 CD	Yellow	6 / 4.2 mm	I2	250
1868811741	CLI C 1-6 GE/SW IC CD	Yellow	6 / 4.2 mm	IC	250
1868811728	CLI C 1-6 GE/SW L1 CD	Yellow	6 / 4.2 mm	L1	250
1868811729	CLI C 1-6 GE/SW L2 CD	Yellow	6 / 4.2 mm	L2	250
1868811730	CLI C 1-6 GE/SW L3 CD	Yellow	6 / 4.2 mm	L3	250
1868811731	CLI C 1-6 GE/SW MP CD	Yellow	6 / 4.2 mm	MP	250
1868811733	CLI C 1-6 GE/SW PE CD	Yellow	6 / 4.2 mm	PE	250
1868811735	CLI C 1-6 GE/SW U1 CD	Yellow	6 / 4.2 mm	U1	250
1868811736	CLI C 1-6 GE/SW U2 CD	Yellow	6 / 4.2 mm	U2	250
1868811737	CLI C 1-6 GE/SW U3 CD	Yellow	6 / 4.2 mm	U3	250
1868811738	CLI C 1-6 GE/SW UN CD	Yellow	6 / 4.2 mm	UN	250
1868811150	CLI C 1-6 GE/SW X1 CD	Yellow	6 / 4.2 mm	X1	250
1868811151	CLI C 1-6 GE/SW X2 CD	Yellow	6 / 4.2 mm	X2	250

CLI C 1-9 Special characters (CD)

Technical data

Material	Fire class acc. to UL 94	Temperature range	Conductor O.D.	Version
PVC, soft, without Cadmium	V-0	-30 °C...80 °C	3 - 5 mm	CD

Ordering data

Order No.	Type	Colour	Length / Width	Printing	Qty.
1868811734	CLI C 1-9 GE/SW PEN CD	Yellow	9 / 4.2 mm	PEN	125

CLI C 2-4 International colour code (MultiPack)

Technical data

Material	Fire class acc. to UL 94	Temperature range	Conductor O.D.	Version
PVC, soft, without Cadmium	V-0	-30 °C...80 °C	4 - 10 mm	MultiPack

Ordering data

Order No.	Type	Colour	Length / Width	Printing	Qty.
0251311503	CLI C 2-4 SW/WS 0 MP	Black	4 / 7 mm	0	100
0251311506	CLI C 2-4 BR/WS 1 MP	Brown	4 / 7 mm	1	100
0251311509	CLI C 2-4 RT/SW 2 MP	Red	4 / 7 mm	2	100
0251311512	CLI C 2-4 OR/SW 3 MP	Orange	4 / 7 mm	3	100
0251311514	CLI C 2-4 GE/SW 4 MP	Yellow	4 / 7 mm	4	100
0251311518	CLI C 2-4 GN/SW 5 MP	Green	4 / 7 mm	5	100
0251311521	CLI C 2-4 BL/SW 6 MP	Blue	4 / 7 mm	6	100
0251311524	CLI C 2-4 VI/SW 7 MP	Violet	4 / 7 mm	7	100
0251311527	CLI C 2-4 GR/SW 8 MP	Grey	4 / 7 mm	8	100
0251310009	CLI C 2-4 WS/SW 9 MP	White	4 / 7 mm	9	100

CLI C 2-4 Numeric sequence (MultiPack)CLI

Technical data

Material	Fire class acc. to UL 94	Temperature range	Conductor O.D.	Version
PVC, soft, without Cadmium	V-0	-30 °C...80 °C	4 - 10 mm	MultiPack

Ordering data

Order No.	Type		Colour	Length / Width	Printing	Qty.
0251311502	CLI C 2-4 GE/SW 0 MP	●	Yellow	4 / 7 mm	0	100
0251311000	CLI C 2-4 WS/SW 0 MP	❍	White	4 / 7 mm	0	100
0251311505	CLI C 2-4 GE/SW 1 MP	●	Yellow	4 / 7 mm	1	100
0251310001	CLI C 2-4 WS/SW 1 MP	❍	White	4 / 7 mm	1	100
0251311508	CLI C 2-4 GE/SW 2 MP	●	Yellow	4 / 7 mm	2	100
0251310002	CLI C 2-4 WS/SW 2 MP	❍	White	4 / 7 mm	2	100
0251311511	CLI C 2-4 GE/SW 3 MP	●	Yellow	4 / 7 mm	3	100
0251310003	CLI C 2-4 WS/SW 3 MP	❍	White	4 / 7 mm	3	100
0251311514	CLI C 2-4 GE/SW 4 MP	●	Yellow	4 / 7 mm	4	100
0251310004	CLI C 2-4 WS/SW 4 MP	❍	White	4 / 7 mm	4	100
0251311517	CLI C 2-4 GE/SW 5 MP	●	Yellow	4 / 7 mm	5	100
0251310005	CLI C 2-4 WS/SW 5 MP	❍	White	4 / 7 mm	5	100
0251311520	CLI C 2-4 GE/SW 6 MP	●	Yellow	4 / 7 mm	6	100
0251310006	CLI C 2-4 WS/SW 6 MP	❍	White	4 / 7 mm	6	100
0251311523	CLI C 2-4 GE/SW 7 MP	●	Yellow	4 / 7 mm	7	100
0251310007	CLI C 2-4 WS/SW 7 MP	❍	White	4 / 7 mm	7	100
0251311526	CLI C 2-4 GE/SW 8 MP	●	Yellow	4 / 7 mm	8	100
0251310008	CLI C 2-4 WS/SW 8 MP	❍	White	4 / 7 mm	8	100
0251311529	CLI C 2-4 GE/SW 9 MP	●	Yellow	4 / 7 mm	9	100
0251310009	CLI C 2-4 WS/SW 9 MP	❍	White	4 / 7 mm	9	100

CLI C 2-4 Alphabetic (MulitPack)

Technical data

Material	Fire class acc. to UL 94	Temperature range	Conductor O.D.	Version
PVC, soft, without Cadmium	V-0	-30 °C...80 °C	4 - 10 mm	MultiPack

Ordering data

Order No.	Type		Colour	Length / Width	Printing	Qty.
0251311637	CLI C 2-4 GE/SW A MP	●	Yellow	4 / 7 mm	A	100
0251311639	CLI C 2-4 GE/SW B MP	●	Yellow	4 / 7 mm	B	100
0251311641	CLI C 2-4 GE/SW C MP	●	Yellow	4 / 7 mm	C	100
0251311643	CLI C 2-4 GE/SW D MP	●	Yellow	4 / 7 mm	D	100
0251311645	CLI C 2-4 GE/SW E MP	●	Yellow	4 / 7 mm	E	100
0251311647	CLI C 2-4 GE/SW F MP	●	Yellow	4 / 7 mm	F	100
0251311649	CLI C 2-4 GE/SW G MP	●	Yellow	4 / 7 mm	G	100
0251311651	CLI C 2-4 GE/SW H MP	●	Yellow	4 / 7 mm	H	100
0251311653	CLI C 2-4 GE/SW I MP	●	Yellow	4 / 7 mm	I	100
0251311655	CLI C 2-4 GE/SW J MP	●	Yellow	4 / 7 mm	J	100
0251311657	CLI C 2-4 GE/SW K MP	●	Yellow	4 / 7 mm	K	100
0251311659	CLI C 2-4 GE/SW L MP	●	Yellow	4 / 7 mm	L	100
0251311661	CLI C 2-4 GE/SW M MP	●	Yellow	4 / 7 mm	M	100
0251311663	CLI C 2-4 GE/SW N MP	●	Yellow	4 / 7 mm	N	100
0251311665	CLI C 2-4 GE/SW O MP	●	Yellow	4 / 7 mm	O	100
0251311667	CLI C 2-4 GE/SW P MP	●	Yellow	4 / 7 mm	P	100
0251311669	CLI C 2-4 GE/SW Q MP	●	Yellow	4 / 7 mm	Q	100
0251311671	CLI C 2-4 GE/SW R MP	●	Yellow	4 / 7 mm	R	100
0251311673	CLI C 2-4 GE/SW S MP	●	Yellow	4 / 7 mm	S	100
0251311676	CLI C 2-4 GE/SW T MP	●	Yellow	4 / 7 mm	T	100
0251311679	CLI C 2-4 GE/SW U MP	●	Yellow	4 / 7 mm	U	100
0251311681	CLI C 2-4 GE/SW V MP	●	Yellow	4 / 7 mm	V	100
0251311683	CLI C 2-4 GE/SW W MP	●	Yellow	4 / 7 mm	W	100
0251311687	CLI C 2-4 GE/SW X MP	●	Yellow	4 / 7 mm	X	100
0251311696	CLI C 2-4 GE/SW Y MP	●	Yellow	4 / 7 mm	Y	100
0251311698	CLI C 2-4 GE/SW Z MP	●	Yellow	4 / 7 mm	Z	100

CLI C 2-4 Special characters (MultiPack)

Technical data

Material	Fire class acc. to UL 94	Temperature range	Conductor O.D.	Version
PVC, soft, without Cadmium	V-0	-30 °C...80 °C	4 - 10 mm	MultiPack

Ordering data

Order No.	Type		Colour	Length / Width	Printing	Qty.
0251311738	CLI C 2-4 GE/SW + MP	●	Yellow	4 / 7 mm	+	100
0251311048	CLI C 2-4 WS/SW + MP	○	White	4 / 7 mm	+	100
0251311740	CLI C 2-4 GE/SW - MP	●	Yellow	4 / 7 mm	-	100
0251311049	CLI C 2-4 WS/SW - MP	○	White	4 / 7 mm	-	100
0251311748	CLI C 2-4 GE/SW . MP	●	Yellow	4 / 7 mm	.	100
0251311742	CLI C 2-4 GE/SW / MP	●	Yellow	4 / 7 mm	/	100
0251311750	CLI C 2-4 GE/SW : MP	●	Yellow	4 / 7 mm	:	100
0251311751	CLI C 2-4 GE/SW = MP	●	Yellow	4 / 7 mm	=	100
0251311752	CLI C 2-4 GE/SW AC MP	●	Yellow	4 / 7 mm	AC	100
0251311746	CLI C 2-4 GE/SW ET MP	●	Yellow	4 / 7 mm	⏚	100
0251311747	CLI C 2-4 GE/SW PET. MP	●	Yellow	4 / 7 mm	⏚	100
0251311697	CLI C 2-4 GE/SW Ä MP	●	Yellow	4 / 7 mm	Ä	100
0251311699	CLI C 2-4 GE/SW Å MP	●	Yellow	4 / 7 mm	Å	100
0251311735	CLI C 2-4 GE/SW Æ MP	●	Yellow	4 / 7 mm	Æ	100
0251311695	CLI C 2-4 GE/SW Ö MP	●	Yellow	4 / 7 mm	Ö	100
0251311736	CLI C 2-4 GE/SW Ø MP	●	Yellow	4 / 7 mm	Ø	100

CLI C 2-4 International colour code (CD)

Technical data

Material	Fire class acc. to UL 94	Temperature range	Conductor O.D.	Version
PVC, soft, without Cadmium	V-0	-30 °C...80 °C	4 - 10 mm	CD

Ordering data

Order No.	Type		Colour	Length / Width	Printing	Qty.
1568261503	CLI C 2-4 SW/WS 0 CD	●	Black	4 / 7 mm	0	250
1568261506	CLI C 2-4 BR/WS 1 CD	●	Brown	4 / 7 mm	1	250
1568261509	CLI C 2-4 RT/SW 2 CD	●	Red	4 / 7 mm	2	250
1568261512	CLI C 2-4 OR/SW 3 CD	●	Orange	4 / 7 mm	3	250
1568261514	CLI C 2-4 GE/SW 4 CD	●	Yellow	4 / 7 mm	4	250
1568261518	CLI C 2-4 GN/SW 5 CD	●	Green	4 / 7 mm	5	250
1568261521	CLI C 2-4 BL/SW 6 CD	●	Blue	4 / 7 mm	6	250
1568261524	CLI C 2-4 VI/SW 7 CD	●	Violet	4 / 7 mm	7	250
1568261527	CLI C 2-4 GR/SW 8 CD	●	Grey	4 / 7 mm	8	250
1568261530	CLI C 2-4 WS/SW 9 CD	○	White	4 / 7 mm	9	250

CLI C 2-4 Numeric sequence (CD)

Technical data

Material	Fire class acc. to UL 94	Temperature range	Conductor O.D.	Version
PVC, soft, without Cadmium	V-0	-30 °C...80 °C	4 - 10 mm	CD

Ordering data

Order No.	Type		Colour	Length / Width	Printing	Qty.
1568261502	CLI C 2-4 GE/SW 0 CD	●	Yellow	4 / 7 mm	0	250
1568261505	CLI C 2-4 GE/SW 1 CD	●	Yellow	4 / 7 mm	1	250
1568261508	CLI C 2-4 GE/SW 2 CD	●	Yellow	4 / 7 mm	2	250
1568261511	CLI C 2-4 GE/SW 3 CD	●	Yellow	4 / 7 mm	3	250
1568261514	CLI C 2-4 GE/SW 4 CD	●	Yellow	4 / 7 mm	4	250
1568261517	CLI C 2-4 GE/SW 5 CD	●	Yellow	4 / 7 mm	5	250
1568261520	CLI C 2-4 GE/SW 6 CD	●	Yellow	4 / 7 mm	6	250
1568261523	CLI C 2-4 GE/SW 7 CD	●	Yellow	4 / 7 mm	7	250
1568261526	CLI C 2-4 GE/SW 8 CD	●	Yellow	4 / 7 mm	8	250
1568261529	CLI C 2-4 GE/SW 9 CD	●	Yellow	4 / 7 mm	9	250

CLI C 2-4 Alphabetic (CD)

Technical data

Material	Fire class acc. to UL 94	Temperature range	Conductor O.D.	Version
PVC, soft, without Cadmium	V-0	-30 °C...80 °C	4 - 10 mm	CD

Ordering data

Order No.	Type		Colour	Length / Width	Printing	Qty.
1568261637	CLI C 2-4 GE/SW A CD	●	Yellow	4 / 7 mm	A	250
1568261639	CLI C 2-4 GE/SW B CD	●	Yellow	4 / 7 mm	B	250
1568261641	CLI C 2-4 GE/SW C CD	●	Yellow	4 / 7 mm	C	250
1568261643	CLI C 2-4 GE/SW D CD	●	Yellow	4 / 7 mm	D	250
1568261645	CLI C 2-4 GE/SW E CD	●	Yellow	4 / 7 mm	E	250
1568261647	CLI C 2-4 GE/SW F CD	●	Yellow	4 / 7 mm	F	250
1568261649	CLI C 2-4 GE/SW G CD	●	Yellow	4 / 7 mm	G	250
1568261651	CLI C 2-4 GE/SW H CD	●	Yellow	4 / 7 mm	H	250
1568261653	CLI C 2-4 GE/SW I CD	●	Yellow	4 / 7 mm	I	250
1568261655	CLI C 2-4 GE/SW J CD	●	Yellow	4 / 7 mm	J	250
1568261657	CLI C 2-4 GE/SW K CD	●	Yellow	4 / 7 mm	K	250
1568261659	CLI C 2-4 GE/SW L CD	●	Yellow	4 / 7 mm	L	250
1568261661	CLI C 2-4 GE/SW M CD	●	Yellow	4 / 7 mm	M	250
1568261663	CLI C 2-4 GE/SW N CD	●	Yellow	4 / 7 mm	N	250
1568261665	CLI C 2-4 GE/SW O CD	●	Yellow	4 / 7 mm	O	250
1568261667	CLI C 2-4 GE/SW P CD	●	Yellow	4 / 7 mm	P	250
1568261669	CLI C 2-4 GE/SW Q CD	●	Yellow	4 / 7 mm	Q	250
1568261671	CLI C 2-4 GE/SW R CD	●	Yellow	4 / 7 mm	R	250
1568261673	CLI C 2-4 GE/SW S CD	●	Yellow	4 / 7 mm	S	250
1568261676	CLI C 2-4 GE/SW T CD	●	Yellow	4 / 7 mm	T	250
1568261679	CLI C 2-4 GE/SW U CD	●	Yellow	4 / 7 mm	U	250
1568261681	CLI C 2-4 GE/SW V CD	●	Yellow	4 / 7 mm	V	250
1568261683	CLI C 2-4 GE/SW W CD	●	Yellow	4 / 7 mm	W	250
1568261687	CLI C 2-4 GE/SW X CD	●	Yellow	4 / 7 mm	X	250
1568261696	CLI C 2-4 GE/SW Y CD	●	Yellow	4 / 7 mm	Y	250
1568261698	CLI C 2-4 GE/SW Z CD	●	Yellow	4 / 7 mm	Z	250

CLI C 2-4 Special characters (CD)

Technical data

Material	Fire class acc. to UL 94	Temperature range	Conductor O.D.	Version
PVC, soft, without Cadmium	V-0	-30 °C...80 °C	4 - 10 mm	CD

Ordering data

Order No.	Type		Colour	Length / Width	Printing	Qty.
1568261738	CLI C 2-4 GE/SW + CD	●	Yellow	4 / 7 mm	+	250
1568261740	CLI C 2-4 GE/SW - CD	●	Yellow	4 / 7 mm	-	250
1568261748	CLI C 2-4 GE/SW . CD	●	Yellow	4 / 7 mm	.	250
1568261742	CLI C 2-4 GE/SW / CD	●	Yellow	4 / 7 mm	/	250
1568261750	CLI C 2-4 GE/SW : CD	●	Yellow	4 / 7 mm	:	250
1568261751	CLI C 2-4 GE/SW = CD	●	Yellow	4 / 7 mm	=	250
1568261752	CLI C 2-4 GE/SW AC CD	●	Yellow	4 / 7 mm	AC	250
1568261746	CLI C 2-4 GE/SW ET CD	●	Yellow	4 / 7 mm	⏚	250
1568261747	CLI C 2-4 GE/SW PET. CD	●	Yellow	4 / 7 mm	⏚	250
1568261697	CLI C 2-4 GE/SW Ä CD	●	Yellow	4 / 7 mm	Ä	250
1568261699	CLI C 2-4 GE/SW Å CD	●	Yellow	4 / 7 mm	Å	250
1568261735	CLI C 2-4 GE/SW Æ CD	●	Yellow	4 / 7 mm	Æ	250
1568261695	CLI C 2-4 GE/SW Ö CD	●	Yellow	4 / 7 mm	Ö	250
1568261736	CLI C 2-4 GE/SW Ø CD	●	Yellow	4 / 7 mm	Ø	250
1568261741	CLI C 2-4 BL/SW - CD	●	Blue	4 / 7 mm	-	250
1568261737	CLI C 2-4 RT/SW + CD	●	Red	4 / 7 mm	+	250

CLI C 2-6 Special characters (MultiPack)

Technical data

Material	Fire class acc. to UL 94	Temperature range	Conductor O.D.	Version
PVC, soft, without Cadmium	V-0	-30 °C...80 °C	4 - 10 mm	MultiPack

Ordering data

Order No.	Type	Colour	Length / Width	Printing	Qty.
1871891728	CLI C 2-6 GE/SW L1 MP	Yellow	6 / 7 mm	L1	100
1871891729	CLI C 2-6 GE/SW L2 MP	Yellow	6 / 7 mm	L2	100
1871891730	CLI C 2-6 GE/SW L3 MP	Yellow	6 / 7 mm	L3	100

CLI C 2-6 Special characters (CD)

Technical data

Material	Fire class acc. to UL 94	Temperature range	Conductor O.D.	Version
PVC, soft, without Cadmium	V-0	-30 °C...80 °C	4 - 10 mm	CD

Ordering data

Order No.	Type	Colour	Length / Width	Printing	Qty.
1871901728	CLI C 2-6 GE/SW L1 CD	Yellow	6 / 7 mm	L1	125
1871901729	CLI C 2-6 GE/SW L2 CD	Yellow	6 / 7 mm	L2	125
1871901730	CLI C 2-6 GE/SW L3 CD	Yellow	6 / 7 mm	L3	125
1871901731	CLI C 2-6 GE/SW PE CD	Yellow	6 / 7 mm	PE	125

CLI C 2-9 Special characters (MultiPack)

Technical data

Material	Fire class acc. to UL 94	Temperature range	Conductor O.D.	Version
PVC, soft, without Cadmium	V-0	-30 °C...80 °C	4 - 10 mm	MultiPack

Ordering data

Order No.	Type	Colour	Length / Width	Printing	Qty.
1872031734	CLI C 2-9 GE/SW PEN MP	Yellow	9 / 7 mm	PEN	100

CLI C 2-9 Special characters (CD)

Technical data

Material	Fire class acc. to UL 94	Temperature range	Conductor O.D.	Version
PVC, soft, without Cadmium	V-0	-30 °C...80 °C	4 - 10 mm	CD

Ordering data

Order No.	Type	Colour	Length / Width	Printing	Qty.
1871971734	CLI C 2-9 GE/SW PEN CD	Yellow	9 / 7 mm	PEN	125

CableLine® – CLI C – closed wire markers

CLI C 3-6 Numeric sequence (MultiPack)

Technical data

Material	Fire class acc. to UL 94	Temperature range	Conductor O.D.	Version
PVC, soft, without Cadmium	V-0	-30 °C...80 °C	8 - 16 mm	MultiPack

Ordering data

Order No.	Type	Colour	Length / Width	Printing	Qty.
0253411502	CLI C 3-6 GE/SW 0 MP	Yellow	6 / 11 mm	0	20
0253411505	CLI C 3-6 GE/SW 1 MP	Yellow	6 / 11 mm	1	20
0253411508	CLI C 3-6 GE/SW 2 MP	Yellow	6 / 11 mm	2	20
0253411511	CLI C 3-6 GE/SW 3 MP	Yellow	6 / 11 mm	3	20
0253411514	CLI C 3-6 GE/SW 4 MP	Yellow	6 / 11 mm	4	20
0253411517	CLI C 3-6 GE/SW 5 MP	Yellow	6 / 11 mm	5	20
0253411520	CLI C 3-6 GE/SW 6 MP	Yellow	6 / 11 mm	6	20
0253411523	CLI C 3-6 GE/SW 7 MP	Yellow	6 / 11 mm	7	20
0253411526	CLI C 3-6 GE/SW 8 MP	Yellow	6 / 11 mm	8	20
0253411529	CLI C 3-6 GE/SW 9 MP	Yellow	6 / 11 mm	9	20

CLI C 3-6 Alphabetic (MulitPack)

Technical data

Material	Fire class acc. to UL 94	Temperature range	Conductor O.D.	Version
PVC, soft, without Cadmium	V-0	-30 °C...80 °C	8 - 16 mm	MultiPack

Ordering data

Order No.	Type	Colour	Length / Width	Printing	Qty.
0253411637	CLI C 3-6 GE/SW A MP	Yellow	6 / 11 mm	A	20
0253411639	CLI C 3-6 GE/SW B MP	Yellow	6 / 11 mm	B	20
0253411641	CLI C 3-6 GE/SW C MP	Yellow	6 / 11 mm	C	20
0253411643	CLI C 3-6 GE/SW D MP	Yellow	6 / 11 mm	D	20
0253411645	CLI C 3-6 GE/SW E MP	Yellow	6 / 11 mm	E	20
0253411647	CLI C 3-6 GE/SW F MP	Yellow	6 / 11 mm	F	20
0253411649	CLI C 3-6 GE/SW G MP	Yellow	6 / 11 mm	G	20
0253411651	CLI C 3-6 GE/SW H MP	Yellow	6 / 11 mm	H	20
0253411653	CLI C 3-6 GE/SW I MP	Yellow	6 / 11 mm	I	20
0253411655	CLI C 3-6 GE/SW J MP	Yellow	6 / 11 mm	J	20
0253411657	CLI C 3-6 GE/SW K MP	Yellow	6 / 11 mm	K	20
0253411659	CLI C 3-6 GE/SW L MP	Yellow	6 / 11 mm	L	20
0253411661	CLI C 3-6 GE/SW M MP	Yellow	6 / 11 mm	M	20
0253411663	CLI C 3-6 GE/SW N MP	Yellow	6 / 11 mm	N	20
0253411665	CLI C 3-6 GE/SW O MP	Yellow	6 / 11 mm	O	20
0253411667	CLI C 3-6 GE/SW P MP	Yellow	6 / 11 mm	P	20
0253411669	CLI C 3-6 GE/SW Q MP	Yellow	6 / 11 mm	Q	20
0253411671	CLI C 3-6 GE/SW R MP	Yellow	6 / 11 mm	R	20
0253411673	CLI C 3-6 GE/SW S MP	Yellow	6 / 11 mm	S	20
0253411676	CLI C 3-6 GE/SW T MP	Yellow	6 / 11 mm	T	20
0253411679	CLI C 3-6 GE/SW U MP	Yellow	6 / 11 mm	U	20
0253411681	CLI C 3-6 GE/SW V MP	Yellow	6 / 11 mm	V	20
0253411683	CLI C 3-6 GE/SW W MP	Yellow	6 / 11 mm	W	20
0253411687	CLI C 3-6 GE/SW X MP	Yellow	6 / 11 mm	X	20
0253411696	CLI C 3-6 GE/SW Y MP	Yellow	6 / 11 mm	Y	20
0253411698	CLI C 3-6 GE/SW Z MP	Yellow	6 / 11 mm	Z	20

CLI C 3-6 Special characters (MultiPack)

Technical data

Material	Fire class acc. to UL 94	Temperature range	Conductor O.D.	Version
PVC, soft, without Cadmium	V-0	-30 °C...80 °C	8 - 16 mm	MultiPack

Ordering data

Order No.	Type		Colour	Length / Width	Printing	Qty.
0253411742	CLI C 3-6 GE/SW / MP	●	Yellow	6 / 11 mm	/	20
0253411738	CLI C 3-6 GE/SW + MP	●	Yellow	6 / 11 mm	+	20
0253411740	CLI C 3-6 GE/SW - MP	●	Yellow	6 / 11 mm	-	20
0253411748	CLI C 3-6 GE/SW . MP	●	Yellow	6 / 11 mm	.	20
0253411750	CLI C 3-6 GE/SW : MP	●	Yellow	6 / 11 mm	:	20
0253411751	CLI C 3-6 GE/SW = MP	●	Yellow	6 / 11 mm	=	20
0253411752	CLI C 3-6 GE/SW AC MP	●	Yellow	6 / 11 mm	AC	20
0253411746	CLI C 3-6 GE/SW ET MP	●	Yellow	6 / 11 mm	⏚	20
0253411697	CLI C 3-6 GE/SW Ä MP	●	Yellow	6 / 11 mm	Ä	20
0253411699	CLI C 3-6 GE/SW Å MP	●	Yellow	6 / 11 mm	Å	20
0253411695	CLI C 3-6 GE/SW Ö MP	●	Yellow	6 / 11 mm	Ö	20
0253411741	CLI C 3-6 BL/SW - MP	●	Blue	6 / 11 mm	-	20

CLI C 3-9 Special characters (MultiPack)

Technical data

Material	Fire class acc. to UL 94	Temperature range	Conductor O.D.	Version
PVC, soft, without Cadmium	V-0	-30 °C...80 °C	8 - 16 mm	MultiPack

Ordering data

Order No.	Type		Colour	Length / Width	Printing	Qty.
0253511726	CLI C 3-9 GE/SW A1 MP	●	Yellow	9 / 11 mm	A1	20
0253511727	CLI C 3-9 GE/SW A2 MP	●	Yellow	9 / 11 mm	A2	20
0253511728	CLI C 3-9 GE/SW L1 MP	●	Yellow	9 / 11 mm	L1	20
0253511729	CLI C 3-9 GE/SW L2 MP	●	Yellow	9 / 11 mm	L2	20
0253511730	CLI C 3-9 GE/SW L3 MP	●	Yellow	9 / 11 mm	L3	20
0253511733	CLI C 3-9 GE/SW PE MP	●	Yellow	9 / 11 mm	PE	20
1872661733	CLI C 3-9 GE/SW PEN MP	●	Yellow	9 / 11 mm	PEN	20
0253511735	CLI C 3-9 GE/SW SL MP	●	Yellow	9 / 11 mm	SL	20
0253511750	CLI C 3-9 GE/SW X1 MP	●	Yellow	9 / 11 mm	X1	20
0253511751	CLI C 3-9 GE/SW X2 MP	●	Yellow	9 / 11 mm	X2	20
0253511752	CLI C 3-9 GE/SW X3 MP	●	Yellow	9 / 11 mm	X3	20

CableLine® – CLI C – closed wire markers

CLI R 02 Blank (MultiPack)

Technical data

Material	Fire class acc. to UL 94	Temperature range	Conductor O.D.	Version
PVC, soft, without Cadmium	V-0	-30 °C...80 °C	1 - 3 mm	MultiPack

Ordering data

Order No.	Type	Colour	Length / Width	Printing	Qty.
0560001687	CLI R 02-3 GE NE	Yellow	3 / 3.4 mm	Blank	10

CLI R 1 Blank (MultiPack)

Technical data

Material	Fire class acc. to UL 94	Temperature range	Conductor O.D.	Version
PVC, soft, without Cadmium	V-0	-30 °C...80 °C	3 - 5 mm	MultiPack

Ordering data

Order No.	Type	Colour	Length / Width	Printing	Qty.
0572900002	CLI R 1-3 BL NE	Blue	3 / 4.2 mm	Blank	10
0572901687	CLI R 1-3 GE NE	Yellow	3 / 4.2 mm	Blank	10

CLI R 02 Custom printing (MultiPack)

Technical data

Material	Fire class acc. to UL 94	Temperature range	Conductor O.D.	Version
PVC, soft, without Cadmium	V-0	-30 °C...80 °C	1 - 3 mm	MultiPack

Ordering data

Order No.	Type	Colour	Length / Width	Printing	Qty.
0560009999	CLI R 02-3 SDR	CSP	3 / 3.4 mm	Custom printing	10

CLI R 1 Custom printing (MultiPack)

Technical data

Material	Fire class acc. to UL 94	Temperature range	Conductor O.D.	Version
PVC, soft, without Cadmium	V-0	-30 °C...80 °C	3 - 5 mm	MultiPack

Ordering data

Order No.	Type	Colour	Length / Width	Printing	Qty.
0572909999	CLI R 1-3 SDR	CSP	3 / 4.2 mm	Custom printing	10

CLI R 02 International colour code (MultiPack)

Technical data

Material	Fire class acc. to UL 94	Temperature range	Conductor O.D.	Version
PVC, soft, without Cadmium	V-0	-30 °C...80 °C	1 - 3 mm	MultiPack

Ordering data

Order No.	Type	Colour	Length / Width	Printing	Qty.
0560001503	CLI R 02-3 SW/WS 0	Black	3 / 3.4 mm	0	10
0560001506	CLI R 02-3 BR/WS 1	Brown	3 / 3.4 mm	1	10
0560001509	CLI R 02-3 RT/SW 2	Red	3 / 3.4 mm	2	10
0560001512	CLI R 02-3 OR/SW 3	Orange	3 / 3.4 mm	3	10
0560001513	CLI R 02-3 GE/SW 4	Yellow	3 / 3.4 mm	4	10
0560001518	CLI R 02-3 GN/SW 5	Green	3 / 3.4 mm	5	10
0560001521	CLI R 02-3 BL/SW 6	Blue	3 / 3.4 mm	6	10
0560001524	CLI R 02-3 VI/SW 7	Violet	3 / 3.4 mm	7	10
0560001527	CLI R 02-3 GR/SW 8	Grey	3 / 3.4 mm	8	10
0560001530	CLI R 02-3 WS/SW 9	White	3 / 3.4 mm	9	10

CLI R 02 Numeric sequence (MultiPack)

Technical data

Material	Fire class acc. to UL 94	Temperature range	Conductor O.D.	Version
PVC, soft, without Cadmium	V-0	-30 °C...80 °C	1 - 3 mm	MultiPack

Ordering data

Order No.	Type	Colour	Length / Width	Printing	Qty.
0560001501	CLI R 02-3 GE/SW 0	Yellow	3 / 3.4 mm	0	10
0560001504	CLI R 02-3 GE/SW 1	Yellow	3 / 3.4 mm	1	10
0560001507	CLI R 02-3 GE/SW 2	Yellow	3 / 3.4 mm	2	10
0560001510	CLI R 02-3 GE/SW 3	Yellow	3 / 3.4 mm	3	10
0560001513	CLI R 02-3 GE/SW 4	Yellow	3 / 3.4 mm	4	10
0560001516	CLI R 02-3 GE/SW 5	Yellow	3 / 3.4 mm	5	10
0560001519	CLI R 02-3 GE/SW 6	Yellow	3 / 3.4 mm	6	10
0560001522	CLI R 02-3 GE/SW 7	Yellow	3 / 3.4 mm	7	10
0560001525	CLI R 02-3 GE/SW 8	Yellow	3 / 3.4 mm	8	10
0560001528	CLI R 02-3 GE/SW 9	Yellow	3 / 3.4 mm	9	10

CLI R 02 Alphabetic (MulitPack)

Technical data

Material	Fire class acc. to UL 94	Temperature range	Conductor O.D.	Version
PVC, soft, without Cadmium	V-0	-30 °C...80 °C	1 - 3 mm	MultiPack

Ordering data

Order No.	Type	Colour	Length / Width	Printing	Qty.
0560001638	CLI R 02-3 GE/SW A	Yellow	3 / 3.4 mm	A	10
0560001640	CLI R 02-3 GE/SW B	Yellow	3 / 3.4 mm	B	10
0560001642	CLI R 02-3 GE/SW C	Yellow	3 / 3.4 mm	C	10
0560001644	CLI R 02-3 GE/SW D	Yellow	3 / 3.4 mm	D	10
0560001646	CLI R 02-3 GE/SW E	Yellow	3 / 3.4 mm	E	10
0560001648	CLI R 02-3 GE/SW F	Yellow	3 / 3.4 mm	F	10
0560001650	CLI R 02-3 GE/SW G	Yellow	3 / 3.4 mm	G	10
0560001652	CLI R 02-3 GE/SW H	Yellow	3 / 3.4 mm	H	10
0560001654	CLI R 02-3 GE/SW I	Yellow	3 / 3.4 mm	I	10
0560001656	CLI R 02-3 GE/SW J	Yellow	3 / 3.4 mm	J	10
0560001658	CLI R 02-3 GE/SW K	Yellow	3 / 3.4 mm	K	10
0560001660	CLI R 02-3 GE/SW L	Yellow	3 / 3.4 mm	L	10
0560001662	CLI R 02-3 GE/SW M	Yellow	3 / 3.4 mm	M	10
0560001664	CLI R 02-3 GE/SW N	Yellow	3 / 3.4 mm	N	10
0560001666	CLI R 02-3 GE/SW O	Yellow	3 / 3.4 mm	O	10
0560001668	CLI R 02-3 GE/SW P	Yellow	3 / 3.4 mm	P	10
0560001670	CLI R 02-3 GE/SW Q	Yellow	3 / 3.4 mm	Q	10
0560001672	CLI R 02-3 GE/SW R	Yellow	3 / 3.4 mm	R	10
0560001675	CLI R 02-3 GE/SW S	Yellow	3 / 3.4 mm	S	10
0560001678	CLI R 02-3 GE/SW T	Yellow	3 / 3.4 mm	T	10
0560001680	CLI R 02-3 GE/SW U	Yellow	3 / 3.4 mm	U	10
0560001682	CLI R 02-3 GE/SW V	Yellow	3 / 3.4 mm	V	10
0560001684	CLI R 02-3 GE/SW W	Yellow	3 / 3.4 mm	W	10
0560001693	CLI R 02-3 GE/SW X	Yellow	3 / 3.4 mm	X	10
0560001697	CLI R 02-3 GE/SW Y	Yellow	3 / 3.4 mm	Y	10
0560001699	CLI R 02-3 GE/SW Z	Yellow	3 / 3.4 mm	Z	10

CLI R 02 Special characters (MultiPack)

Technical data

Material	Fire class acc. to UL 94	Temperature range	Conductor O.D.	Version
PVC, soft, without Cadmium	V-0	-30 °C...80 °C	1 - 3 mm	MultiPack

Ordering data

Order No.	Type	Colour	Length / Width	Printing	Qty.
0560001738	CLI R 02-3 GE/SW +	Yellow	3 / 3.4 mm	+	10
0560001740	CLI R 02-3 GE/SW -	Yellow	3 / 3.4 mm	-	10
0560001749	CLI R 02-3 GE/SW .	Yellow	3 / 3.4 mm	.	10
0560001743	CLI R 02-3 GE/SW /	Yellow	3 / 3.4 mm	/	10
0560001698	CLI R 02-3 GE/SW Å	Yellow	3 / 3.4 mm	Å	10
0560001695	CLI R 02-3 GE/SW Ö	Yellow	3 / 3.4 mm	Ö	10

CLI R 02-3 Special characters (MultiPack)

Technical data

Material	Fire class acc. to UL 94	Temperature range	Conductor O.D.	Version
PVC, soft, without Cadmium	V-0	-30 °C...80 °C	1 - 3 mm	MultiPack

Ordering data

Order No.	Type	Colour	Length / Width	Printing	Qty.
0560001739	CLI R 02-3 RT/SW +	Red	3 / 3.4 mm	+	10
0560001741	CLI R 02-3 BL/SW -	Blue	3 / 3.4 mm	-	10

CLI R 1 International colour code (MultiPack)

Technical data

Material	Fire class acc. to UL 94	Temperature range	Conductor O.D.	Version
PVC, soft, without Cadmium	V-0	-30 °C...80 °C	3 - 5 mm	MultiPack

Ordering data

Order No.	Type	Colour	Length / Width	Printing	Qty.
0572901502	CLI R 1-3 SW/WS 0	Black	3 / 4.2 mm	0	10
0572901505	CLI R 1-3 BR/WS 1	Brown	3 / 4.2 mm	1	10
0572901508	CLI R 1-3 RT/SW 2	Red	3 / 4.2 mm	2	10
0572901511	CLI R 1-3 OR/SW 3	Orange	3 / 4.2 mm	3	10
0572901515	CLI R 1-3 GE/SW 4	Yellow	3 / 4.2 mm	4	10
0572901517	CLI R 1-3 GN/SW 5	Green	3 / 4.2 mm	5	10
0572901520	CLI R 1-3 BL/SW 6	Blue	3 / 4.2 mm	6	10
0572901523	CLI R 1-3 VI/SW 7	Violet	3 / 4.2 mm	7	10
0572901526	CLI R 1-3 GR/SW 8	Grey	3 / 4.2 mm	8	10
0572901529	CLI R 1-3 WS/SW 9	White	3 / 4.2 mm	9	10

CLI R 1-3 Numeric sequence (MultiPack)

Technical data

Material	Fire class acc. to UL 94	Temperature range	Conductor O.D.	Version
PVC, soft, without Cadmium	V-0	-30 °C...80 °C	3 - 5 mm	MultiPack

Ordering data

Order No.	Type	Colour	Length / Width	Printing	Qty.
0572901503	CLI R 1-3 GE/SW 0	Yellow	3 / 4.2 mm	0	10
0572901506	CLI R 1-3 GE/SW 1	Yellow	3 / 4.2 mm	1	10
0572901509	CLI R 1-3 GE/SW 2	Yellow	3 / 4.2 mm	2	10
0572901512	CLI R 1-3 GE/SW 3	Yellow	3 / 4.2 mm	3	10
0572901515	CLI R 1-3 GE/SW 4	Yellow	3 / 4.2 mm	4	10
0572901518	CLI R 1-3 GE/SW 5	Yellow	3 / 4.2 mm	5	10
0572901521	CLI R 1-3 GE/SW 6	Yellow	3 / 4.2 mm	6	10
0572901524	CLI R 1-3 GE/SW 7	Yellow	3 / 4.2 mm	7	10
0572901527	CLI R 1-3 GE/SW 8	Yellow	3 / 4.2 mm	8	10
0572901530	CLI R 1-3 GE/SW 9	Yellow	3 / 4.2 mm	9	10

CLI R 1-3 Alphabetic (MulitPack)

Technical data

Material	Fire class acc. to UL 94	Temperature range	Conductor O.D.	Version
PVC, soft, without Cadmium	V-0	-30 °C...80 °C	3 - 5 mm	MultiPack

Ordering data

Order No.	Type		Colour	Length / Width	Printing	Qty.
0572901638	CLI R 1-3 GE/SW A	●	Yellow	3 / 4.2 mm	A	10
0572901640	CLI R 1-3 GE/SW B	●	Yellow	3 / 4.2 mm	B	10
0572901642	CLI R 1-3 GE/SW C	●	Yellow	3 / 4.2 mm	C	10
0572901644	CLI R 1-3 GE/SW D	●	Yellow	3 / 4.2 mm	D	10
0572901646	CLI R 1-3 GE/SW E	●	Yellow	3 / 4.2 mm	E	10
0572901648	CLI R 1-3 GE/SW F	●	Yellow	3 / 4.2 mm	F	10
0572901650	CLI R 1-3 GE/SW G	●	Yellow	3 / 4.2 mm	G	10
0572901652	CLI R 1-3 GE/SW H	●	Yellow	3 / 4.2 mm	H	10
0572901654	CLI R 1-3 GE/SW I	●	Yellow	3 / 4.2 mm	I	10
0572901656	CLI R 1-3 GE/SW J	●	Yellow	3 / 4.2 mm	J	10
0572901658	CLI R 1-3 GE/SW K	●	Yellow	3 / 4.2 mm	K	10
0572901660	CLI R 1-3 GE/SW L	●	Yellow	3 / 4.2 mm	L	10
0572901662	CLI R 1-3 GE/SW M	●	Yellow	3 / 4.2 mm	M	10
0572901664	CLI R 1-3 GE/SW N	●	Yellow	3 / 4.2 mm	N	10
0572901666	CLI R 1-3 GE/SW O	●	Yellow	3 / 4.2 mm	O	10
0572901668	CLI R 1-3 GE/SW P	●	Yellow	3 / 4.2 mm	P	10
0572901670	CLI R 1-3 GE/SW Q	●	Yellow	3 / 4.2 mm	Q	10
0572901672	CLI R 1-3 GE/SW R	●	Yellow	3 / 4.2 mm	R	10
0572901675	CLI R 1-3 GE/SW S	●	Yellow	3 / 4.2 mm	S	10
0572901678	CLI R 1-3 GE/SW T	●	Yellow	3 / 4.2 mm	T	10
0572901680	CLI R 1-3 GE/SW U	●	Yellow	3 / 4.2 mm	U	10
0572901682	CLI R 1-3 GE/SW V	●	Yellow	3 / 4.2 mm	V	10
0572901684	CLI R 1-3 GE/SW W	●	Yellow	3 / 4.2 mm	W	10
0572901693	CLI R 1-3 GE/SW X	●	Yellow	3 / 4.2 mm	X	10
0572901697	CLI R 1-3 GE/SW Y	●	Yellow	3 / 4.2 mm	Y	10
0572901699	CLI R 1-3 GE/SW Z	●	Yellow	3 / 4.2 mm	Z	10

CLI R 1-3 Special characters (MultiPack)

Technical data

Material	Fire class acc. to UL 94	Temperature range	Conductor O.D.	Version
PVC, soft, without Cadmium	V-0	-30 °C...80 °C	3 - 5 mm	MultiPack

Ordering data

Order No.	Type		Colour	Length / Width	Printing	Qty.
0572901738	CLI R 1-3 GE/SW +	●	Yellow	3 / 4.2 mm	+	10
0572901740	CLI R 1-3 GE/SW -	●	Yellow	3 / 4.2 mm	-	10
0572901749	CLI R 1-3 GE/SW .	●	Yellow	3 / 4.2 mm	.	10
0572901743	CLI R 1-3 GE/SW /	●	Yellow	3 / 4.2 mm	/	10
0572901745	CLI R 1-3 GE/SW ET	●	Yellow	3 / 4.2 mm	⏚	10
0572901698	CLI R 1-3 GE/SW Å	●	Yellow	3 / 4.2 mm	Å	10
0572901741	CLI R 1-3 BL/SW -	●	Blue	3 / 4.2 mm	-	10
0572901746	CLI R 1-3 BL/SW N	●	Blue	3 / 4.2 mm	N	10
0572901739	CLI R 1-3 RT/SW +	●	Red	3 / 4.2 mm	+	10

CLI O – Open wire markers

CLI O wire markers are fitted to connected wires, which makes them suitable for updating existing facilities.
Three different sizes are available to mark wire cross-sections from 0.4 mm² to maximum 4.0 mm². Profile and design guarantee the secure and permanent attachment of the individually combinable markers.

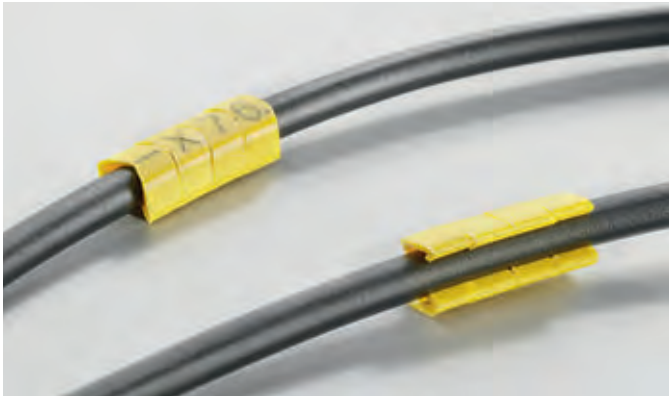

Open marker from type CLI O also allows mounting onto already connected wires.

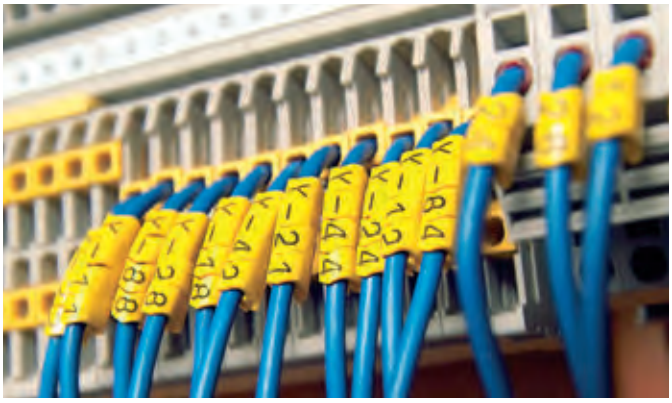

Advantages:

- Open markers for connected wires
- Marker profile with anti-rotation safeguard for combination marking
- Perfect for all marking tasks of retrofitted wiring
- Extremely low space requirements
- Rapid clip-on attachment saves time

CLI O

Version	Open markers made from hard PVC. The flexible and sturdy barbed hooks guarantee secure attachment on the wire. Standard, special prints available.
Material	Hard PVC, cadmium- and silicone-free
Temperature range	–30 °C ... 80 °C
Flammability classification	Corresponds to V0 to UL 94
Resistance	Highly resistant to oils and petrol as well as gamma and UV radiation
Printing	Laser marking

Wire cross-section

CLI O 10	0.4 mm² – 1.5 mm²
CLI O 20	1.5 mm² – 3 mm²
CLI O 30	3 mm² – 4 mm²

CLI C 10 Blank (MultiPack)

Technical data

Material	Temperature range	Fire class acc. to UL 94	Conductor O.D.	Version
PVC, soft, without Cadmium	-30 °C...80 °C	V-0	2 - 3 mm	MultiPack

Ordering data

Order No.	Type	Colour	Length / Width	Printing	Qty.
0689600000	CLI O 10-3 GE NE MP	Yellow	3 / 4 mm	Blank	200

CLI O 20 Blank (MultiPack)

Technical data

Material	Temperature range	Fire class acc. to UL 94	Conductor O.D.	Version
PVC, soft, without Cadmium	-30 °C...80 °C	V-0	3 - 4 mm	MultiPack

Ordering data

Order No.	Type	Colour	Length / Width	Printing	Qty.
0689700000	CLI O 20-3 GE NE MP	Yellow	3 / 5.5 mm	Blank	200

CLI O 30 Blank (MultiPack)

Technical data

Material	Temperature range	Fire class acc. to UL 94	Conductor O.D.	Version
PVC, soft, without Cadmium	-30 °C...80 °C	V-0	4 - 5 mm	MultiPack

Ordering data

Order No.	Type	Colour	Length / Width	Printing	Qty.
0689800000	CLI O 30-3 GE NE MP	Yellow	3 / 6 mm	Blank	200

CLI O 10 Custom printing (MultiPack)

Technical data

Material	Temperature range	Fire class acc. to UL 94	Conductor O.D.	Version
PVC, soft, without Cadmium	-30 °C...80 °C	V-0	2 - 3 mm	MultiPack

Ordering data

Order No.	Type	Colour	Length / Width	Printing	Qty.
0648009999	CLI O 10-3 SDR MP	CSP	3 / 4 mm	Custom printing	1000

CLI O 20 Custom printing (MultiPack)

Technical data

Material	Temperature range	Fire class acc. to UL 94	Conductor O.D.	Version
PVC, soft, without Cadmium	-30 °C...80 °C	V-0	3 - 4 mm	MultiPack

Ordering data

Order No.	Type	Colour	Length / Width	Printing	Qty.
0648109999	CLI O 20-3 SDR MP	CSP	3 / 5.5 mm	Custom printing	1000

CableLine® – CLI O – open wire markers

CLI O 30 Custom printing (MultiPack)

Technical data

Material	Temperature range	Fire class acc. to UL 94	Conductor O.D.	Version
PVC, soft, without Cadmium	-30 °C...80 °C	V-0	4 - 5 mm	MultiPack

Ordering data

Order No.	Type	Colour	Length / Width	Printing	Qty.
0648209999	CLI O 30-3 SDR MP	CSP	3 / 6 mm	Custom printing	1000

CLI O 10 Alphabetic (MulitPack)

Technical data

Material	Temperature range	Fire class acc. to UL 94	Conductor O.D.	Version
PVC, soft, without Cadmium	-30 °C...80 °C	V-0	2 - 3 mm	MultiPack

Ordering data

Order No.	Type	Colour	Length / Width	Printing	Qty.
0648001637	CLI O 10-3 GE/SW A MP	Yellow	3 / 4 mm	A	200
0648001639	CLI O 10-3 GE/SW B MP	Yellow	3 / 4 mm	B	200
0648001641	CLI O 10-3 GE/SW C MP	Yellow	3 / 4 mm	C	200
0648001643	CLI O 10-3 GE/SW D MP	Yellow	3 / 4 mm	D	200
0648001645	CLI O 10-3 GE/SW E MP	Yellow	3 / 4 mm	E	200
0648001647	CLI O 10-3 GE/SW F MP	Yellow	3 / 4 mm	F	200
0648001649	CLI O 10-3 GE/SW G MP	Yellow	3 / 4 mm	G	200
0648001651	CLI O 10-3 GE/SW H MP	Yellow	3 / 4 mm	H	200
0648001653	CLI O 10-3 GE/SW I MP	Yellow	3 / 4 mm	I	200
0648001655	CLI O 10-3 GE/SW J MP	Yellow	3 / 4 mm	J	200
0648001657	CLI O 10-3 GE/SW K MP	Yellow	3 / 4 mm	K	200
0648001659	CLI O 10-3 GE/SW L MP	Yellow	3 / 4 mm	L	200
0648001661	CLI O 10-3 GE/SW M MP	Yellow	3 / 4 mm	M	200
0648001663	CLI O 10-3 GE/SW N MP	Yellow	3 / 4 mm	N	200
0648001665	CLI O 10-3 GE/SW O MP	Yellow	3 / 4 mm	O	200
0648001667	CLI O 10-3 GE/SW P MP	Yellow	3 / 4 mm	P	200
0648001669	CLI O 10-3 GE/SW Q MP	Yellow	3 / 4 mm	Q	200
0648001671	CLI O 10-3 GE/SW R MP	Yellow	3 / 4 mm	R	200
0648001673	CLI O 10-3 GE/SW S MP	Yellow	3 / 4 mm	S	200
0648001676	CLI O 10-3 GE/SW T MP	Yellow	3 / 4 mm	T	200
0648001679	CLI O 10-3 GE/SW U MP	Yellow	3 / 4 mm	U	200
0648001681	CLI O 10-3 GE/SW V MP	Yellow	3 / 4 mm	V	200
0648001683	CLI O 10-3 GE/SW W MP	Yellow	3 / 4 mm	W	200
0648001687	CLI O 10-3 GE/SW X MP	Yellow	3 / 4 mm	X	200
0648001696	CLI O 10-3 GE/SW Y MP	Yellow	3 / 4 mm	Y	200
0648001698	CLI O 10-3 GE/SW Z MP	Yellow	3 / 4 mm	Z	200

CLI O 10 Special characters (MultiPack)

Technical data

Material	Temperature range	Fire class acc. to UL 94	Conductor O.D.	Version
PVC, soft, without Cadmium	-30 °C...80 °C	V-0	2 - 3 mm	MultiPack

Ordering data

Order No.	Type	Colour	Length / Width	Printing	Qty.
0648001738	CLI O 10-3 GE/SW + MP	Yellow	3 / 4 mm	+	200
0648001740	CLI O 10-3 GE/SW - MP	Yellow	3 / 4 mm	-	200
0648001746	CLI O 10-3 GE/SW ET MP	Yellow	3 / 4 mm	⏚	200
0648001697	CLI O 10-3 GE/SW Ä MP	Yellow	3 / 4 mm	Ä	200
0648001699	CLI O 10-3 GE/SW Å MP	Yellow	3 / 4 mm	Å	200
0648001695	CLI O 10-3 GE/SW Ö MP	Yellow	3 / 4 mm	Ö	200

CLI O 20 Numeric sequence (MultiPack)

Technical data

Material	Temperature range	Fire class acc. to UL 94	Conductor O.D.	Version
PVC, soft, without Cadmium	-30 °C...80 °C	V-0	3 - 4 mm	MultiPack

Ordering data

Order No.	Type		Colour	Length / Width	Printing	Qty.
0648101502	CLI O 20-3 GE/SW 0 MP	●	Yellow	3 / 5.5 mm	0	200
0648101505	CLI O 20-3 GE/SW 1 MP	●	Yellow	3 / 5.5 mm	1	200
0648101508	CLI O 20-3 GE/SW 2 MP	●	Yellow	3 / 5.5 mm	2	200
0648101511	CLI O 20-3 GE/SW 3 MP	●	Yellow	3 / 5.5 mm	3	200
0648101514	CLI O 20-3 GE/SW 4 MP	●	Yellow	3 / 5.5 mm	4	200
0648101517	CLI O 20-3 GE/SW 5 MP	●	Yellow	3 / 5.5 mm	5	200
0648101520	CLI O 20-3 GE/SW 6 MP	●	Yellow	3 / 5.5 mm	6	200
0648101523	CLI O 20-3 GE/SW 7 MP	●	Yellow	3 / 5.5 mm	7	200
0648101526	CLI O 20-3 GE/SW 8 MP	●	Yellow	3 / 5.5 mm	8	200
0648101529	CLI O 20-3 GE/SW 9 MP	●	Yellow	3 / 5.5 mm	9	200

CLI O 20 Alphabetic (MulitPack)

Technical data

Material	Temperature range	Fire class acc. to UL 94	Conductor O.D.	Version
PVC, soft, without Cadmium	-30 °C...80 °C	V-0	3 - 4 mm	MultiPack

Ordering data

Order No.	Type		Colour	Length / Width	Printing	Qty.
0648101637	CLI O 20-3 GE/SW A MP	●	Yellow	3 / 5.5 mm	A	200
0648101639	CLI O 20-3 GE/SW B MP	●	Yellow	3 / 5.5 mm	B	200
0648101641	CLI O 20-3 GE/SW C MP	●	Yellow	3 / 5.5 mm	C	200
0648101643	CLI O 20-3 GE/SW D MP	●	Yellow	3 / 5.5 mm	D	200
0648101645	CLI O 20-3 GE/SW E MP	●	Yellow	3 / 5.5 mm	E	200
0648101647	CLI O 20-3 GE/SW F MP	●	Yellow	3 / 5.5 mm	F	200
0648101649	CLI O 20-3 GE/SW G MP	●	Yellow	3 / 5.5 mm	G	200
0648101651	CLI O 20-3 GE/SW H MP	●	Yellow	3 / 5.5 mm	H	200
0648101653	CLI O 20-3 GE/SW I MP	●	Yellow	3 / 5.5 mm	I	200
0648101655	CLI O 20-3 GE/SW J MP	●	Yellow	3 / 5.5 mm	J	200
0648101657	CLI O 20-3 GE/SW K MP	●	Yellow	3 / 5.5 mm	K	200
0648101659	CLI O 20-3 GE/SW L MP	●	Yellow	3 / 5.5 mm	L	200
0648101661	CLI O 20-3 GE/SW M MP	●	Yellow	3 / 5.5 mm	M	200
0648101663	CLI O 20-3 GE/SW N MP	●	Yellow	3 / 5.5 mm	N	200
0648101665	CLI O 20-3 GE/SW O MP	●	Yellow	3 / 5.5 mm	O	200
0648101667	CLI O 20-3 GE/SW P MP	●	Yellow	3 / 5.5 mm	P	200
0648101669	CLI O 20-3 GE/SW Q MP	●	Yellow	3 / 5.5 mm	Q	200
0648101671	CLI O 20-3 GE/SW R MP	●	Yellow	3 / 5.5 mm	R	200
0648101673	CLI O 20-3 GE/SW S MP	●	Yellow	3 / 5.5 mm	S	200
0648101676	CLI O 20-3 GE/SW T MP	●	Yellow	3 / 5.5 mm	T	200
0648101679	CLI O 20-3 GE/SW U MP	●	Yellow	3 / 5.5 mm	U	200
0648101681	CLI O 20-3 GE/SW V MP	●	Yellow	3 / 5.5 mm	V	200
0648101683	CLI O 20-3 GE/SW W MP	●	Yellow	3 / 5.5 mm	W	200
0648101687	CLI O 20-3 GE/SW X MP	●	Yellow	3 / 5.5 mm	X	200
0648101696	CLI O 20-3 GE/SW Y MP	●	Yellow	3 / 5.5 mm	Y	200
0648101698	CLI O 20-3 GE/SW Z MP	●	Yellow	3 / 5.5 mm	Z	200

CableLine® – CLI O – open wire markers

CLI O 20 Special characters (MultiPack)

Technical data

Material	Temperature range	Fire class acc. to UL 94	Conductor O.D.	Version
PVC, soft, without Cadmium	-30 °C...80 °C	V-0	3 - 4 mm	MultiPack

Ordering data

Order No.	Type		Colour	Length / Width	Printing	Qty.
0648101738	CLI O 20-3 GE/SW + MP	●	Yellow	3 / 5.5 mm	+	200
0648101740	CLI O 20-3 GE/SW - MP	●	Yellow	3 / 5.5 mm	-	200
0648101697	CLI O 20-3 GE/SW Ä MP	●	Yellow	3 / 5.5 mm	Ä	200
0648101699	CLI O 20-3 GE/SW Å MP	●	Yellow	3 / 5.5 mm	Å	200
0648101695	CLI O 20-3 GE/SW Ö MP	●	Yellow	3 / 5.5 mm	Ö	200

CLI O 30 Numeric sequence (MultiPack)

Technical data

Material	Temperature range	Fire class acc. to UL 94	Conductor O.D.	Version
PVC, soft, without Cadmium	-30 °C...80 °C	V-0	4 - 5 mm	MultiPack

Ordering data

Order No.	Type		Colour	Length / Width	Printing	Qty.
0648201502	CLI O 30-3 GE/SW 0 MP	●	Yellow	3 / 6 mm	0	200
0648201505	CLI O 30-3 GE/SW 1 MP	●	Yellow	3 / 6 mm	1	200
0648201508	CLI O 30-3 GE/SW 2 MP	●	Yellow	3 / 6 mm	2	200
0648201511	CLI O 30-3 GE/SW 3 MP	●	Yellow	3 / 6 mm	3	200
0648201514	CLI O 30-3 GE/SW 4 MP	●	Yellow	3 / 6 mm	4	200
0648201517	CLI O 30-3 GE/SW 5 MP	●	Yellow	3 / 6 mm	5	200
0648201520	CLI O 30-3 GE/SW 6 MP	●	Yellow	3 / 6 mm	6	200
0648201523	CLI O 30-3 GE/SW 7 MP	●	Yellow	3 / 6 mm	7	200
0648201526	CLI O 30-3 GE/SW 8 MP	●	Yellow	3 / 6 mm	8	200
0648201529	CLI O 30-3 GE/SW 9 MP	●	Yellow	3 / 6 mm	9	200

CLI O 30 Alphabetic (MulitPack)

Technical data

Material	Temperature range	Fire class acc. to UL 94	Conductor O.D.	Version
PVC, soft, without Cadmium	-30 °C...80 °C	V-0	4 - 5 mm	MultiPack

Ordering data

Order No.	Type		Colour	Length / Width	Printing	Qty.
0648201637	CLI O 30-3 GE/SW A MP	●	Yellow	3 / 6 mm	A	200
0648201639	CLI O 30-3 GE/SW B MP	●	Yellow	3 / 6 mm	B	200
0648201641	CLI O 30-3 GE/SW C MP	●	Yellow	3 / 6 mm	C	200
0648201643	CLI O 30-3 GE/SW D MP	●	Yellow	3 / 6 mm	D	200
0648201645	CLI O 30-3 GE/SW E MP	●	Yellow	3 / 6 mm	E	200
0648201647	CLI O 30-3 GE/SW F MP	●	Yellow	3 / 6 mm	F	200
0648201649	CLI O 30-3 GE/SW G MP	●	Yellow	3 / 6 mm	G	200
0648201651	CLI O 30-3 GE/SW H MP	●	Yellow	3 / 6 mm	H	200
0648201653	CLI O 30-3 GE/SW I MP	●	Yellow	3 / 6 mm	I	200
0648201655	CLI O 30-3 GE/SW J MP	●	Yellow	3 / 6 mm	J	200
0648201657	CLI O 30-3 GE/SW K MP	●	Yellow	3 / 6 mm	K	200
0648201659	CLI O 30-3 GE/SW L MP	●	Yellow	3 / 6 mm	L	200
0648201661	CLI O 30-3 GE/SW M MP	●	Yellow	3 / 6 mm	M	200
0648201663	CLI O 30-3 GE/SW N MP	●	Yellow	3 / 6 mm	N	200
0648201665	CLI O 30-3 GE/SW O MP	●	Yellow	3 / 6 mm	O	200
0648201667	CLI O 30-3 GE/SW P MP	●	Yellow	3 / 6 mm	P	200
0648201669	CLI O 30-3 GE/SW Q MP	●	Yellow	3 / 6 mm	Q	200
0648201671	CLI O 30-3 GE/SW R MP	●	Yellow	3 / 6 mm	R	200
0648201673	CLI O 30-3 GE/SW S MP	●	Yellow	3 / 6 mm	S	200
0648201676	CLI O 30-3 GE/SW T MP	●	Yellow	3 / 6 mm	T	200
0648201679	CLI O 30-3 GE/SW U MP	●	Yellow	3 / 6 mm	U	200
0648201681	CLI O 30-3 GE/SW V MP	●	Yellow	3 / 6 mm	V	200
0648201683	CLI O 30-3 GE/SW W MP	●	Yellow	3 / 6 mm	W	200
0648201687	CLI O 30-3 GE/SW X MP	●	Yellow	3 / 6 mm	X	200
0648201696	CLI O 30-3 GE/SW Y MP	●	Yellow	3 / 6 mm	Y	200
0648201698	CLI O 30-3 GE/SW Z MP	●	Yellow	3 / 6 mm	Z	200

CLI O 30 Special characters (MultiPack)

Technical data

Material	Temperature range	Fire class acc. to UL 94	Conductor O.D.	Version
PVC, soft, without Cadmium	-30 °C...80 °C	V-0	4 - 5 mm	MultiPack

Ordering data

Order No.	Type		Colour	Length / Width	Printing	Qty.
0648201738	CLI O 30-3 GE/SW + MP	●	Yellow	3 / 6 mm	+	200
0648201740	CLI O 30-3 GE/SW - MP	●	Yellow	3 / 6 mm	-	200
0648201746	CLI O 30-3 GE/SW ET MP	●	Yellow	3 / 6 mm	⏚	200
0648201697	CLI O 30-3 GE/SW Ä MP	●	Yellow	3 / 6 mm	Ä	200
0648201699	CLI O 30-3 GE/SW Å MP	●	Yellow	3 / 6 mm	Å	200
0648201695	CLI O 30-3 GE/SW Ö MP	●	Yellow	3 / 6 mm	Ö	200

CabelLine® CLI M – Cable markers and holders

CLI M identification markers simply slide onto CLI MH carrier strips and are secured by means of cable ties. CLI MH strips are available in two lengths. This system is particularly suitable for wires and cables with large cross-sections.

Advantages:

- Combination markers for marking cables and conduits
- One size for all diameters from 16 mm²
- Unrestricted combination options
- Closed, captive marking
- Very good legibility

Markers from type CLI M are pushed onto holding strips of type CLI MH and finally mounted with cable ties.

CLI MH

Version	CLI MH carrier strips for CLI M markers are available in lengths of 70 and 110 mm for 10 or 20 CLI M markers respectively. They are attached using one or two cable ties.
Material	PA 6.6
Temperature range	–30 °C ... 80 °C
Flammability classification	Corresponds to V2 to UL 94
Resistance	Highly resistant to oils and petrol as well as gamma and UV radiation
Printing	Maximum 6.2 mm

CLI M

Version	Closed, oval combination markers. The markers are slid onto CLI MH holders and secured by means of cable ties. Standard, special and international colour-code compliant prints available.
Material	Soft PVC, cadmium- and silicone-free
Temperature range	–30 °C ... 80 °C
Flammability classification	Corresponds to V0 to UL 94
Resistance	Highly resistant to oils and petrol as well as gamma and UV radiation
Printing	Laser marking

Wire cross-section

CLI M 2	16 mm² – 500 mm²

CLI M 2 Blank (LOOP)

Technical data

Material	Temperature range	Fire class acc. to UL 94	Conductor O.D.	Version
PVC, soft, without Cadmium	-30 °C...80 °C	V-0	10 - 317 mm	Loop

Ordering data

Order No.	Type		Colour	Length / Width	Printing	Qty.
1886531687	CLI M 2-25Q GE NEUT SG	●	Yellow	25 / 11.4 mm	Blank	1000
1886541687	CLI M 2-40Q GE NEUT SG	●	Yellow	40 / 11.4 mm	Blank	1000

CLI M 2 Blank (CD)

Technical data

Material	Temperature range	Fire class acc. to UL 94	Conductor O.D.	Version
PVC, soft, without Cadmium	-30 °C...80 °C	V-0	10 - 317 mm	CD

Ordering data

Order No.	Type		Colour	Length / Width	Printing	Qty.
1568300001	CLI M 2-4 GE NE CD	●	Yellow	4 / 11.4 mm	Blank	500

CLI M 2 Blank (MultiPack)

Technical data

Material	Temperature range	Fire class acc. to UL 94	Conductor O.D.	Version
PVC, soft, without Cadmium	-30 °C...80 °C	V-0	10 - 317 mm	MultiPack

Ordering data

Order No.	Type		Colour	Length / Width	Printing	Qty.
1733650004	CLI M 2-4 GE NE MP	●	Yellow	4 / 11.4 mm	Blank	100

CLI M Custom printing (LOOP)

Technical data

Material	Temperature range	Fire class acc. to UL 94	Conductor O.D.	Version
PVC, soft, without Cadmium	-30 °C...80 °C	V-0	10 - 317 mm	Loop

Ordering data

Order No.	Type		Colour	Length / Width	Printing	Qty.
1912830000	CLI M 2-4 SDR SG	●	Yellow	4 / 11.4 mm	Custom printing	100
1912840000	CLI M 2-6 SDR SG	●	Yellow	6 / 11.4 mm	Custom printing	100
1873440000	CLI M 2-9 SDR SG	●	Yellow	9 / 11.4 mm	Custom printing	100
1873450000	CLI M 2-12 SDR SG	●	Yellow	12 / 11.4 mm	Custom printing	100
1899260000	CLI M 2-15 SDR SG	●	Yellow	15 / 11.4 mm	Custom printing	100
1899230000	CLI M 2-18 SDR SG	●	Yellow	18 / 11.4 mm	Custom printing	100
1873460000	CLI M 2-21 SDR SG	●	Yellow	21 / 11.4 mm	Custom printing	750
1912860000	CLI M 2-24 SDR SG	●	Yellow	24 / 11.4 mm	Custom printing	100
1579500000	CLI M 2-25Q SDR SG	●	Yellow	25 / 11.4 mm	Custom printing	100
1912870000	CLI M 2-27 SDR SG	●	Yellow	27 / 11.4 mm	Custom printing	100
1912880000	CLI M 2-30 SDR SG	●	Yellow	30 / 11.4 mm	Custom printing	100
1912920000	CLI M 2-33 SDR SG	●	Yellow	33 / 11.4 mm	Custom printing	100
1912950000	CLI M 2-36 SDR SG	●	Yellow	36 / 11.4 mm	Custom printing	100
1912960000	CLI M 2-39 SDR SG	●	Yellow	39 / 11.4 mm	Custom printing	100
1634790000	CLI M 2-40Q SDR SG	●	Yellow	40 / 11.4 mm	Custom printing	100

CLI M Custom printing (CD)

Technical data

Material	Temperature range	Fire class acc. to UL 94	Conductor O.D.	Version
PVC, soft, without Cadmium	-30 °C...80 °C	V-0	10 - 317 mm	CD

Ordering data

Order No.	Type		Colour	Length / Width	Printing	Qty.
1568309999	CLI M 2-4 SDR CD	●	Yellow	4 / 11.4 mm	Custom printing	500
1871789999	CLI M 2-6 SDR CD	●	Yellow	6 / 11.4 mm	Custom printing	250
1899250000	CLI M 2-9 SDR CD	●	Yellow	9 / 11.4 mm	Custom printing	200

CLI M 2-4 International color code (MultiPack)

Technical data

Material	Temperature range	Fire class acc. to UL 94	Conductor O.D.	Version
PVC, soft, without Cadmium	-30 °C...80 °C	V-0	10 - 317 mm	MultiPack

Ordering data

Order No.	Type		Colour	Length / Width	Printing	Qty.
1733651503	CLI M 2-4 SW/WS 0 MP	●	Black	4 / 11.3 mm	0	100
1733651506	CLI M 2-4 BR/WS 1 MP	●	Brown	4 / 11.3 mm	1	100
1733651509	CLI M 2-4 RT/SW 2 MP	●	Red	4 / 11.3 mm	2	100
1733651512	CLI M 2-4 OR/SW 3 MP	●	Orange	4 / 11.3 mm	3	100
1733651514	CLI M 2-4 GE/SW 4 MP	●	Yellow	4 / 11.3 mm	4	100
1733651518	CLI M 2-4 GN/SW 5 MP	●	Green	4 / 11.3 mm	5	100
1733651521	CLI M 2-4 BL/SW 6 MP	●	Blue	4 / 11.3 mm	6	100
1733651524	CLI M 2-4 VI/SW 7 MP	●	Violet	4 / 11.3 mm	7	100
1733651527	CLI M 2-4 GR/SW 8 MP	●	Grey	4 / 11.3 mm	8	100
1733651530	CLI M 2-4 WS/SW 9 MP	○	White	4 / 11.3 mm	9	100

CLI M 2-4 Special characters (MultiPack)

Technical data

Material	Temperature range	Fire class acc. to UL 94	Conductor O.D.	Version
PVC, soft, without Cadmium	-30 °C...80 °C	V-0	10 - 317 mm	MultiPack

Ordering data

Order No.	Type		Colour	Length / Width	Printing	Qty.
1733651742	CLI M 2-4 GE/SW / MP	●	Yellow	4 / 11.3 mm	/	100
1733651738	CLI M 2-4 GE/SW + MP	●	Yellow	4 / 11.3 mm	+	100
1733651740	CLI M 2-4 GE/SW - MP	●	Yellow	4 / 11.3 mm	-	100
1733651748	CLI M 2-4 GE/SW . MP	●	Yellow	4 / 11.3 mm	.	100
1733651750	CLI M 2-4 GE/SW : MP	●	Yellow	4 / 11.3 mm	:	100
1733651751	CLI M 2-4 GE/SW = MP	●	Yellow	4 / 11.3 mm	=	100
1733651752	CLI M 2-4 GE/SW AC MP	●	Yellow	4 / 11.3 mm	AC	100
1733651746	CLI M 2-4 GE/SW ET MP	●	Yellow	4 / 11.3 mm	⏚	100
1733651747	CLI M 2-4 GE/SW PET. MP	●	Yellow	4 / 11.3 mm	⏚	100
1733651697	CLI M 2-4 GE/SW Ä MP	●	Yellow	4 / 11.3 mm	Ä	100
1733651699	CLI M 2-4 GE/SW Å MP	●	Yellow	4 / 11.3 mm	Å	100
1733651695	CLI M 2-4 GE/SW Ö MP	●	Yellow	4 / 11.3 mm	Ö	100

CLI M 2-4 Numeric sequence (MultiPack)

Technical data

Material	Temperature range	Fire class acc. to UL 94	Conductor O.D.	Version
PVC, soft, without Cadmium	-30 °C...80 °C	V-0	10 - 317 mm	MultiPack

Ordering data

Order No.	Type		Colour	Length / Width	Printing	Qty.
1733651514	CLI M 2-4 GE/SW 4 MP	●	Yellow	4 / 11.3 mm	4	100
1733651502	CLI M 2-4 GE/SW 0 MP	●	Yellow	4 / 11.3 mm	0	100
1733651505	CLI M 2-4 GE/SW 1 MP	●	Yellow	4 / 11.3 mm	1	100
1733651508	CLI M 2-4 GE/SW 2 MP	●	Yellow	4 / 11.3 mm	2	100
1733651511	CLI M 2-4 GE/SW 3 MP	●	Yellow	4 / 11.3 mm	3	100
1733651517	CLI M 2-4 GE/SW 5 MP	●	Yellow	4 / 11.3 mm	5	100
1733651520	CLI M 2-4 GE/SW 6 MP	●	Yellow	4 / 11.3 mm	6	100
1733651523	CLI M 2-4 GE/SW 7 MP	●	Yellow	4 / 11.3 mm	7	100
1733651526	CLI M 2-4 GE/SW 8 MP	●	Yellow	4 / 11.3 mm	8	100
1733651529	CLI M 2-4 GE/SW 9 MP	●	Yellow	4 / 11.3 mm	9	100

CLI M 2-4 Alphabetic (MulitPack)

Technical data

Material	Temperature range	Fire class acc. to UL 94	Conductor O.D.	Version
PVC, soft, without Cadmium	-30 °C...80 °C	V-0	10 - 317 mm	MultiPack

Ordering data

Order No.	Type		Colour	Length / Width	Printing	Qty.
1733651637	CLI M 2-4 GE/SW A MP	●	Yellow	4 / 11.3 mm	A	100
1733651639	CLI M 2-4 GE/SW B MP	●	Yellow	4 / 11.3 mm	B	100
1733651641	CLI M 2-4 GE/SW C MP	●	Yellow	4 / 11.3 mm	C	100
1733651643	CLI M 2-4 GE/SW D MP	●	Yellow	4 / 11.3 mm	D	100
1733651645	CLI M 2-4 GE/SW E MP	●	Yellow	4 / 11.3 mm	E	100
1733651647	CLI M 2-4 GE/SW F MP	●	Yellow	4 / 11.3 mm	F	100
1733651649	CLI M 2-4 GE/SW G MP	●	Yellow	4 / 11.3 mm	G	100
1733651651	CLI M 2-4 GE/SW H MP	●	Yellow	4 / 11.3 mm	H	100
1733651653	CLI M 2-4 GE/SW I MP	●	Yellow	4 / 11.3 mm	I	100
1733651655	CLI M 2-4 GE/SW J MP	●	Yellow	4 / 11.3 mm	J	100
1733651657	CLI M 2-4 GE/SW K MP	●	Yellow	4 / 11.3 mm	K	100
1733651659	CLI M 2-4 GE/SW L MP	●	Yellow	4 / 11.3 mm	L	100
1733651661	CLI M 2-4 GE/SW M MP	●	Yellow	4 / 11.3 mm	M	100
1733651663	CLI M 2-4 GE/SW N MP	●	Yellow	4 / 11.3 mm	N	100
1733651665	CLI M 2-4 GE/SW O MP	●	Yellow	4 / 11.3 mm	O	100
1733651667	CLI M 2-4 GE/SW P MP	●	Yellow	4 / 11.3 mm	P	100
1733651669	CLI M 2-4 GE/SW Q MP	●	Yellow	4 / 11.3 mm	Q	100
1733651671	CLI M 2-4 GE/SW R MP	●	Yellow	4 / 11.3 mm	R	100
1733651673	CLI M 2-4 GE/SW S MP	●	Yellow	4 / 11.3 mm	S	100
1733651676	CLI M 2-4 GE/SW T MP	●	Yellow	4 / 11.3 mm	T	100
1733651679	CLI M 2-4 GE/SW U MP	●	Yellow	4 / 11.3 mm	U	100
1733651681	CLI M 2-4 GE/SW V MP	●	Yellow	4 / 11.3 mm	V	100
1733651683	CLI M 2-4 GE/SW W MP	●	Yellow	4 / 11.3 mm	W	100
1733651687	CLI M 2-4 GE/SW X MP	●	Yellow	4 / 11.3 mm	X	100
1733651696	CLI M 2-4 GE/SW Y MP	●	Yellow	4 / 11.3 mm	Y	100
1733651698	CLI M 2-4 GE/SW Z MP	●	Yellow	4 / 11.3 mm	Z	100

CLI M 2-4 International colour code (CD)

Technical data

Material	Temperature range	Fire class acc. to UL 94	Conductor O.D.	Version
PVC, soft, without Cadmium	-30 °C...80 °C	V-0	10 - 317 mm	CD

Ordering data

Order No.	Type		Colour	Length / Width	Printing	Qty.
1568301506	CLI M 2-4 BR/WS 1 CD	●	Brown	4 / 11.3 mm	1	500
1568301509	CLI M 2-4 RT/SW 2 CD	●	Red	4 / 11.3 mm	2	500
1568301512	CLI M 2-4 OR/SW 3 CD	●	Orange	4 / 11.3 mm	3	500
1568301514	CLI M 2-4 GE/SW 4 CD	●	Yellow	4 / 11.3 mm	4	500
1568301518	CLI M 2-4 GN/SW 5 CD	●	Green	4 / 11.3 mm	5	500
1568301521	CLI M 2-4 BL/SW 6 CD	●	Blue	4 / 11.3 mm	6	500
1568301524	CLI M 2-4 VI/SW 7 CD	●	Violet	4 / 11.3 mm	7	500
1568301527	CLI M 2-4 GR/SW 8 CD	●	Grey	4 / 11.3 mm	8	500
1568301530	CLI M 2-4 WS/SW 9 CD	○	White	4 / 11.3 mm	9	500

CLOI M 2-4 Special characters (CD)

Technical data

Material	Temperature range	Fire class acc. to UL 94	Conductor O.D.	Version
PVC, soft, without Cadmium	-30 °C...80 °C	V-0	10 - 317 mm	CD

Ordering data

Order No.	Type		Colour	Length / Width	Printing	Qty.
1568301742	CLI M 2-4 GE/SW / CD	●	Yellow	4 / 11.3 mm	/	500
1568301738	CLI M 2-4 GE/SW + CD	●	Yellow	4 / 11.3 mm	+	500
1568301740	CLI M 2-4 GE/SW - CD	●	Yellow	4 / 11.3 mm	-	500
1568301748	CLI M 2-4 GE/SW . CD	●	Yellow	4 / 11.3 mm	.	500
1568301750	CLI M 2-4 GE/SW : CD	●	Yellow	4 / 11.3 mm	:	500
1568301751	CLI M 2-4 GE/SW = CD	●	Yellow	4 / 11.3 mm	=	500
1568301752	CLI M 2-4 GE/SW AC CD	●	Yellow	4 / 11.3 mm	AC	500
1568301746	CLI M 2-4 GE/SW ET CD	●	Yellow	4 / 11.3 mm	⏚	500
1568301747	CLI M 2-4 GE/SW PET. CD	●	Yellow	4 / 11.3 mm	⏚	500
1568301694	CLI M 2-4 GE/SW Ä CD	●	Yellow	4 / 11.3 mm	Ä	500
1568301699	CLI M 2-4 GE/SW Å CD	●	Yellow	4 / 11.3 mm	Å	500
1568301735	CLI M 2-4 GE/SW Æ CD	●	Yellow	4 / 11.3 mm	Æ	500
1568301695	CLI M 2-4 GE/SW Ö CD	●	Yellow	4 / 11.3 mm	Ö	500
1568301736	CLI M 2-4 GE/SW Ø CD	●	Yellow	4 / 11.3 mm	Ø	500
1568301741	CLI M 2-4 BL/SW - CD	●	Blue	4 / 11.3 mm	-	500

CLI M 2-4 Numeric sequence (CD)

Technical data

Material	Temperature range	Fire class acc. to UL 94	Conductor O.D.	Version
PVC, soft, without Cadmium	-30 °C...80 °C	V-0	10 - 317 mm	CD

Ordering data

Order No.	Type		Colour	Length / Width	Printing	Qty.
1568301000	CLI M 2-4 WS/SW 0 CD	❍	White	4 / 11.3 mm	0	500
1568301502	CLI M 2-4 GE/SW 0 CD	●	Yellow	4 / 11.3 mm	0	500
1568301697	CLI M 2-4 WS/SW 1 CD	❍	White	4 / 11.3 mm	1	500
1568301505	CLI M 2-4 GE/SW 1 CD	●	Yellow	4 / 11.3 mm	1	500
1568301514	CLI M 2-4 GE/SW 4 CD	●	Yellow	4 / 11.3 mm	4	500
1568300002	CLI M 2-4 WS/SW 2 CD	❍	White	4 / 11.3 mm	2	500
1568301508	CLI M 2-4 GE/SW 2 CD	●	Yellow	4 / 11.3 mm	2	500
1568300003	CLI M 2-4 WS/SW 3 CD	❍	White	4 / 11.3 mm	3	500
1568301511	CLI M 2-4 GE/SW 3 CD	●	Yellow	4 / 11.3 mm	3	500
1568300004	CLI M 2-4 WS/SW 4 CD	❍	White	4 / 11.3 mm	4	500
1568301530	CLI M 2-4 WS/SW 9 CD	❍	White	4 / 11.3 mm	9	500
1568300005	CLI M 2-4 WS/SW 5 CD	❍	White	4 / 11.3 mm	5	500
1568301517	CLI M 2-4 GE/SW 5 CD	●	Yellow	4 / 11.3 mm	5	500
1568300006	CLI M 2-4 WS/SW 6 CD	❍	White	4 / 11.3 mm	6	500
1568301520	CLI M 2-4 GE/SW 6 CD	●	Yellow	4 / 11.3 mm	6	500
1568300007	CLI M 2-4 WS/SW 7 CD	❍	White	4 / 11.3 mm	7	500
1568301523	CLI M 2-4 GE/SW 7 CD	●	Yellow	4 / 11.3 mm	7	500
1568300008	CLI M 2-4 WS/SW 8 CD	❍	White	4 / 11.3 mm	8	500
1568301526	CLI M 2-4 GE/SW 8 CD	●	Yellow	4 / 11.3 mm	8	500
1568301529	CLI M 2-4 GE/SW 9 CD	●	Yellow	4 / 11.3 mm	9	500

CLI M 2-4 Alphabetic (CD)

Technical data

Material	Temperature range	Fire class acc. to UL 94	Conductor O.D.	Version
PVC, soft, without Cadmium	-30 °C...80 °C	V-0	10 - 317 mm	CD

Ordering data

Order No.	Type		Colour	Length / Width	Printing	Qty.
1568301637	CLI M 2-4 GE/SW A CD	●	Yellow	4 / 11.3 mm	A	500
1568301639	CLI M 2-4 GE/SW B CD	●	Yellow	4 / 11.3 mm	B	500
1568301641	CLI M 2-4 GE/SW C CD	●	Yellow	4 / 11.3 mm	C	500
1568301643	CLI M 2-4 GE/SW D CD	●	Yellow	4 / 11.3 mm	D	500
1568301645	CLI M 2-4 GE/SW E CD	●	Yellow	4 / 11.3 mm	E	500
1568301647	CLI M 2-4 GE/SW F CD	●	Yellow	4 / 11.3 mm	F	500
1568301649	CLI M 2-4 GE/SW G CD	●	Yellow	4 / 11.3 mm	G	500
1568301651	CLI M 2-4 GE/SW H CD	●	Yellow	4 / 11.3 mm	H	500
1568301653	CLI M 2-4 GE/SW I CD	●	Yellow	4 / 11.3 mm	I	500
1568301655	CLI M 2-4 GE/SW J CD	●	Yellow	4 / 11.3 mm	J	500
1568301657	CLI M 2-4 GE/SW K CD	●	Yellow	4 / 11.3 mm	K	500
1568301659	CLI M 2-4 GE/SW L CD	●	Yellow	4 / 11.3 mm	L	500
1568301661	CLI M 2-4 GE/SW M CD	●	Yellow	4 / 11.3 mm	M	500
1568301663	CLI M 2-4 GE/SW N CD	●	Yellow	4 / 11.3 mm	N	500
1568301665	CLI M 2-4 GE/SW O CD	●	Yellow	4 / 11.3 mm	O	500
1568301667	CLI M 2-4 GE/SW P CD	●	Yellow	4 / 11.3 mm	P	500
1568301669	CLI M 2-4 GE/SW Q CD	●	Yellow	4 / 11.3 mm	Q	500
1568301671	CLI M 2-4 GE/SW R CD	●	Yellow	4 / 11.3 mm	R	500
1568301673	CLI M 2-4 GE/SW S CD	●	Yellow	4 / 11.3 mm	S	500
1568301676	CLI M 2-4 GE/SW T CD	●	Yellow	4 / 11.3 mm	T	500
1568301679	CLI M 2-4 GE/SW U CD	●	Yellow	4 / 11.3 mm	U	500
1568301681	CLI M 2-4 GE/SW V CD	●	Yellow	4 / 11.3 mm	V	500
1568301683	CLI M 2-4 GE/SW W CD	●	Yellow	4 / 11.3 mm	W	500
1568301687	CLI M 2-4 GE/SW X CD	●	Yellow	4 / 11.3 mm	X	500
1568301696	CLI M 2-4 GE/SW Y CD	●	Yellow	4 / 11.3 mm	Y	500
1568301698	CLI M 2-4 GE/SW Z CD	●	Yellow	4 / 11.3 mm	Z	500

CLI M 2-6 Special characters (CD)

Technical data

Material	Temperature range	Fire class acc. to UL 94	Conductor O.D.	Version
PVC, soft, without Cadmium	-30 °C...80 °C	V-0	10 - 317 mm	CD

Ordering data

Order No.	Type		Colour	Length / Width	Printing	Qty.
1871781728	CLI M 2-6 GE/SW L1 CD	●	Yellow	6 / 11.3 mm	L1	250
1871781729	CLI M 2-6 GE/SW L2 CD	●	Yellow	6 / 11.3 mm	L2	250
1871781730	CLI M 2-6 GE/SW L3 CD	●	Yellow	6 / 11.3 mm	L3	250

CLI M 2-6 Special characters (MultiPack)

Technical data

Material	Temperature range	Fire class acc. to UL 94	Conductor O.D.	Version
PVC, soft, without Cadmium	-30 °C...80 °C	V-0	10 - 317 mm	MultiPack

Ordering data

Order No.	Type		Colour	Length / Width	Printing	Qty.
1871751728	CLI M 2-6 GE/SW L1 MP	●	Yellow	6 / 11.3 mm	L1	100
1871751729	CLI M 2-6 GE/SW L2 MP	●	Yellow	6 / 11.3 mm	L2	100
1871751730	CLI M 2-6 GE/SW L3 MP	●	Yellow	6 / 11.3 mm	L3	100

CLI RH

Holder for assembling mounting mandrels CLI R 02 (red) or CLI R 1 (blue)

Technical data

Material
Polyamide

Ordering data

Order No.	Type		Colour	Length / Width	Qty.
0563700000	CLI RH 20-02 CLI R 02	●	Red	55 / 55 mm	1
0563600000	CLI RH 20-10 CLI R 10	●	Blue	55 / 55 mm	1

CLI R

The CLI R mounting mandrels are ideal for use with the CLI C for assembling conductors.

- CLI R 02 for CLI C 02-3
- CLI R 1 for CLI C 1-3

Technical data

Material
POM

Ordering data

Order No.	Type		Colour	Length / Width	Qty.
0559900000	CLI R 02 F. CLI C 02-3	●	Red	150 / 2 mm	20
0532100000	CLI R 1 F. CLI C 1-3	●	Blue	150 / 2.5 mm	20

CLI RS

The CLI RS metal mounting mandrels are ideal for use with CLI RS for assembling conductors.

- CLI RS 3 for CLI C 02
- CLI RS 4 for CLI C 02 and CLI C 1 (max. Ø 4.2mm)
- CLI RS 5 for CLI C 1 (max. Ø 5mm)

Technical data

Material
Steel

Ordering data

Order No.	Type		Colour	Length / Width	Qty.
0559200000	CLI RS 3 MDCLI C 02	●	Silver	100 / 3 mm	1
0559300000	CLI RS 4 MDCLI C1+02	●	Silver	100 / 4 mm	1
0648300000	CLI RS 5 MDCLI C 1	●	Silver	100 / 5 mm	1

Holders for CLI M markers

The CLI MH holder strip for CLI M markers is available in lengths of 70 and 100 mm for 10 or 20 CLI M 2-4 at a time. Held in place with one or two cable ties.

Technical data

Material
Polyamide 66

Ordering data

Order No.	Type		Colour	Length / Width	Qty.
0189400000	CLI MH 110 HSTR	●	Black	110 / 10 mm	100
0524400000	CLI MH 70 HSTR	●	Black	65 / 10 mm	100

WSK

Assortment box with 12 compartments for placing CLI markers.
WSK 12 (0336000000) is fitted with CLI C 1-3 GE printed from von 0 to 9.

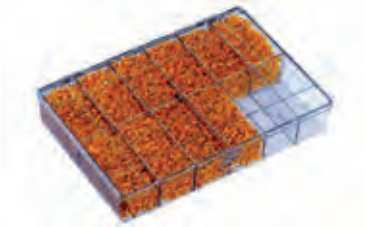

Technical data

Material
Polystyrene

Ordering data

Order No.	Type	Colour	Length / Width	Qty.
0335900000	WSK 12 , LEER	Transparent	250 / 185 mm	1
0336000000	WSK12 m. CLI C 1-3 GE/SW Bez. 0-9 ●	Orange	250 / 185 mm	1

CLI CD box

Steel cassette for holding CDs
- 25 CDs with CLI C 02-3
- 21 CDs with CLI C 1-3
- 14 CDs with CLI C 2-4
- 11 CDs with CLI M 2-4

Technical data

Material
Sheet steel

Ordering data

Order No.	Type	Colour	Length / Width	Qty.
1763290000	CLI CD-BOX ●	Orange	247 / 134 mm	1

WSM – Stainless steel markers

WSM is a complete marking system for cables, wires, conduits and components. It offers markings that last in conditions that no other markers can withstand. The range consists of stainless steel character tiles, holders and cable ties – available separately or complete in the WSM Set and Service Box.

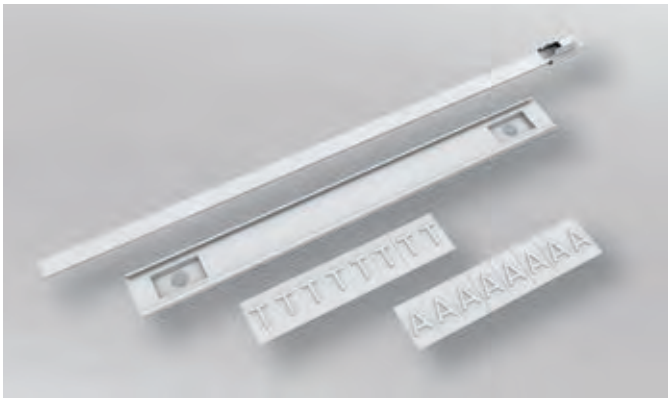

Advantages:

- Durable, embossed characters for optimum legibility
- Resistant to heat, cold, corrosion, acids, chemicals, fire and more
- Individual and multi-character markings can also be combined
- Rapid attachment
- Ideal for outdoor applications
- Easy attachment with cable ties

Contents of WSM Service Box:
Character tiles
40 each of
0-9, A-Ö, +, -, x, /, :, ., ~, =, ü, earth, neutral.

Cable ties
200 cable ties 200 mm

Stainless steel holders
30 pieces each of 48 mm and 60 mm,
20 pieces of 84 mm
10 pieces of 108 mm and 288 mm

WSM

Version	Marker holders designed with raised profiles at both ends to ensure the cable ties slide through easily. Individual or combined, the single marker plates are inserted into the holder. Special printing available.
Material	Acid-resistant stainless steel grade SS 2348 (AISI-316)
Temperature range	–80 °C ... 500 °C
Resistance	Fireproof. Resistant to heat, cold, corrosion, acids, chemical substances, and so forth.
Printing	High-quality embossed. Alphanumeric and special characters
Fixing accessories	Stainless steel cable ties with ball-bearing lock

WSM small plates

Technical data

Material	Temperature range	Fire class acc. to UL 94	Conductor O.D.	Width
Stainless steel 1.4404	-80 °C...500 °C			9.9 mm

Ordering data

Order No.	Type		Colour	Length	Printing	Qty.
1712501000	WSM 10 0	●	Silver	5.5 mm	0	200
1712500001	WSM 10 1	●	Silver	5.5 mm	1	200
1712500002	WSM 10 2	●	Silver	5.5 mm	2	200
1712500003	WSM 10 3	●	Silver	5.5 mm	3	200
1712500004	WSM 10 4	●	Silver	5.5 mm	4	200
1712500005	WSM 10 5	●	Silver	5.5 mm	5	200
1712500006	WSM 10 6	●	Silver	5.5 mm	6	200
1712500007	WSM 10 7	●	Silver	5.5 mm	7	200
1712500008	WSM 10 8	●	Silver	5.5 mm	8	200
1712500009	WSM 10 9	●	Silver	5.5 mm	9	200
1712501637	WSM 10 A	●	Silver	5.5 mm	A	200
1712501639	WSM 10 B	●	Silver	5.5 mm	B	200
1712501641	WSM 10 C	●	Silver	5.5 mm	C	200
1712501643	WSM 10 D	●	Silver	5.5 mm	D	200
1712501645	WSM 10 E	●	Silver	5.5 mm	E	200
1712501647	WSM 10 F	●	Silver	5.5 mm	F	200
1712501649	WSM 10 G	●	Silver	5.5 mm	G	200
1712501651	WSM 10 H	●	Silver	5.5 mm	H	200
1712501653	WSM 10 I	●	Silver	5.5 mm	I	200
1712501655	WSM 10 J	●	Silver	5.5 mm	J	200
1712501657	WSM 10 K	●	Silver	5.5 mm	K	200
1712501659	WSM 10 L	●	Silver	5.5 mm	L	200
1712501661	WSM 10 M	●	Silver	5.5 mm	M	200
1712501663	WSM 10 N	●	Silver	5.5 mm	N	200
1712501665	WSM 10 O	●	Silver	5.5 mm	O	200
1712501667	WSM 10 P	●	Silver	5.5 mm	P	200
1712501669	WSM 10 Q	●	Silver	5.5 mm	Q	200
1712501671	WSM 10 R	●	Silver	5.5 mm	R	200
1712501673	WSM 10 S	●	Silver	5.5 mm	S	200
1712501676	WSM 10 T	●	Silver	5.5 mm	T	200
1712501679	WSM 10 U	●	Silver	5.5 mm	U	200
1712501681	WSM 10 V	●	Silver	5.5 mm	V	200
1712501683	WSM 10 W	●	Silver	5.5 mm	W	200
1712501687	WSM 10 X	●	Silver	5.5 mm	X	200
1712501696	WSM 10 Y	●	Silver	5.5 mm	Y	200
1712501698	WSM 10 Z	●	Silver	5.5 mm	Z	200
1712501054	WSM 10 Ä	●	Silver	5.5 mm	Ä	200
1712501700	WSM 10 Å	●	Silver	5.5 mm	Å	200
1712501672	WSM 10 Æ	●	Silver	5.5 mm	Æ	200
1712501055	WSM 10 Ö	●	Silver	5.5 mm	Ö	200
1712501670	WSM 10 Ø	●	Silver	5.5 mm	Ø	200
1712501699	WSM 10 Ü	●	Silver	5.5 mm	Ü	200
1712501056	WSM 10 ~	●	Silver	5.5 mm	~	200
1712501744	WSM 10 (	●	Silver	5.5 mm	(	200
1712501738	WSM 10 +	●	Silver	5.5 mm	+	200
1712501740	WSM 10 -	●	Silver	5.5 mm	-	200
1712501743	WSM 10 .	●	Silver	5.5 mm	.	200
1712501739	WSM 10 /	●	Silver	5.5 mm	/	200
1712501741	WSM 10 :	●	Silver	5.5 mm	:	200
1712501742	WSM 10 =	●	Silver	5.5 mm	=	200
1712501053	WSM 10 ERDE	●	Silver	5.5 mm	⏚	200
1924930000	WSM SERVICE BOX KOMP.	●	Silver	330 mm	see text	1

WSM holder

Technical data

Material	Temperature range	Fire class acc. to UL 94	Conductor O.D.	Width
Stainless steel 1.4404	-80 °C...250 °C			11

Ordering data

Order No.	Type		Colour	Length	Number of characters	Qty.
1774500000	WSMH 48mm	●	Silver	48 mm	6	50
1774510000	WSMH 60mm	●	Silver	60 mm	8	50
1774520000	WSMH 84mm	●	Silver	84 mm	12	50
1774530000	WSMH 108mm	●	Silver	108 mm	16	50
1002680000	WSMH 176mm	●	Silver	176 mm	28	50
1774490000	WSMH 288mm	●	Silver	288 mm	46	50

WSM holder custom printing

Technical data

Material	Temperature range	Fire class acc. to UL 94	Conductor O.D.	Width
Stainless steel 1.4404	-80 °C...500 °C			10

Ordering data

Order No.	Type		Colour	Length	Number of characters	Qty.
1912170000	WSMC 1-5	●	Silver	53.5 mm	5	1
1891680000	WSMC 6-10	●	Silver	74 mm	10	1
1891670000	WSMC 11-15	●	Silver	93 mm	15	1
1912140000	WSMC 16-20	●	Silver	112 mm	20	1
1912150000	WSMC 21-25	●	Silver	131 mm	25	1
1912160000	WSMC 26-30	●	Silver	150 mm	30	1

Stainless steel cable ties

Technical data

Material	Temperature range	Fire class acc. to UL 94	Conductor O.D.
Stainless steel 1.4301	-80 °C...538 °C		

Ordering data

Order No.	Type		Colour	Length	Width	Qty.
1699800000	SCT 4 ,6/127 C	●	Silver	127 mm	4.6	100
1699900000	SCT 4,6/266C	●	Silver	266 mm	4.6	100
1699910000	SCT 4,6/360 C	●	Silver	360 mm	4.6	100
1699920000	SCT 4,6/520	●	Silver	520 mm	4.6	100
1699930000	SCT 4,6/679	●	Silver	679 mm	4.6	100
1699940000	SCT 4,6/838	●	Silver	838 mm	4.6	100
1699810000	SCT 4.6/201 C	●	Silver	201 mm	4.6	100

Stainless steel cable ties, coated

Technical data

Material	Temperature range	Fire class acc. to UL 94	Conductor O.D.
Stainless steel, polyester coated	-80 °C...150 °C		

Ordering data

Order No.	Type		Colour	Length	Width	Qty.
1015220000	SCT-C 4.6/100	●	Black	100 mm	4.6	100
1015230000	SCT-C 4.6/125	●	Black	125 mm	4.6	100
1015240000	SCT-C 4.6/150	●	Black	150 mm	4.6	100
1015250000	SCT-C 4.6/200	●	Black	200 mm	4.6	100
1015270000	SCT-C 4.6/360	●	Black	360 mm	4.6	100
1015280000	SCT-C 4.6/520	●	Black	520 mm	4.6	100
1015290000	SCT-C 4.6/680	●	Black	680 mm	4.6	100
1015300000	SCT-C 4.6/840	●	Black	840 mm	4.6	100
1015310000	SCT-C 7.9/200	●	Black	200 mm	7.9	100
1015320000	SCT-C 7.9/360	●	Black	360 mm	7.9	100
1015330000	SCT-C 7.9/520	●	Black	520 mm	7.9	100
1015340000	SCT-C 7.9/680	●	Black	680 mm	7.9	100
1015350000	SCT-C 7.9/840	●	Black	840 mm	7.9	100

CB cable ties provide fixings for cables and markers for special requirements. They are especially suitable for fixing CLI M, SFX, WKM and WKS cable markers. The material consists of unbreakable polyamide PA 6.6 with UL 94 flammability rating V2.

Cable ties

Technical data

Material	Polyamide PA 66, halogen-free
Flammability class	V2 acc. to UL 94
Colour	natural and black

Temperature range
- Continuous operating temperature: (after assembly) –40 °C to +85 °C
- Installation temperature: (during assembly) –10 °C to +60 °C

Approval according to EN 62275
Halogen-free

Resistance to chemicals
- Excellent resistance to alkalis, oils, grease, oil products, chlorate solvents
- Limited resistance to all acids
- No resistance to phenols

Approvals

Ordering data

Type	Dimensions (LxW) mm	Min. (mm) bundle-Ø	Max. (mm) bundle-Ø	Min. Tensile strength in N	Qty.	natural Order No.	black Order No.
CB 98/2.5	98 x 2.5	1	21	80	100	1278600000	1697890000
CB 120/4.5	120 x 4.5	2.5	24	220	100	7940006052	7940006053
CB 120/7.8	120 x 7.8	3.5	24	540	100	7940006062	7940006063
CB 135/2.5	135 x 2.5	1	32	80	100	7940006040	7940006047
CB 140/3.5	140 x 3.5	2	35	130	100	1278700000	1697900000
CB 160/4.5	160 x 4.5	2.5	40	220	100	1723540000	1723560000
CB 160/2.6	160 x 2.6	1	40	80	100	7940006048	7940006049
CB 178/4.8	178 x 4.8	2	45	220	100	1723550000	1723570000
CB 200/4.8	200 x 4.8	3	50	220	100	1278800000	1697910000
CB 200/2.6	200 x 2.6	1	50	80	100	7940006050	7940006051
CB 200/3.5	200 x 3.5	2	50	130	100	1720630000	1720660000
CB 180/7.8	180 x 7.8	3.5	45	540	100	7940006064	7940006065
CB 225/12.5	225 x 12.5	7.5	57	1080	100	7940006076	7940006077
CB 240/7.8	240 x 7.8	3.5	63	540	100	7940006066	7940006067
CB 250/4.8	250 x 4.8	3	68	220	100	7940006054	7940006055
CB 290/3.5	290 x 3.5	2	80	130	100	1720640000	1720650000
CB 290/4.5	290 x 4.5	3.5	80	220	100	1278900000	1697920000
CB 300/7.8	300 x 7.8	4	80	540	100	7940006068	7940006069
CB 370/3.5	370 x 3.5	2	103	130	100	7940006056	7940006057
CB 360/4.5	360 x 4.5	3.5	103	220	100	1279000000	1697930000
CB 365/7.5	365 x 7.5	8	100	540	100	1279100000	1697940000
CB 390/4.8	390 x 4.8	3.5	106	220	100	7940006058	7940006059
CB 430/4.5	430 x 4.5	3.5	115	220	100	7940006060	7940006061
CB 450/7.5	450 x 7.5	35	130	540	100	7940006070	7940006071
CB 500/12.5	500 x 12.5	30	143	1080	100	7940006078	7940006079
CB 540/7.5	540 x 7.5	35	158	540	100	7940006072	7940006073
CB 750/7.5	750 x 7.5	35	220	540	100	1720680000	1720670000
CB 780/9.0	780 x 9.0	32	233	700	100	7940006074	7940006075
CB 850/12.5	850 x 12.5	40	255	1080	100	7940006082	
CB 1000/12.5	1000 x 12.5	40	302	1080	100		7940006085

Releasable cable ties

Type	Dimensions (LxW) mm	Min. (mm) bundle-Ø	Max. (mm) bundle-Ø	Min. Tensile strength in N	Qty.	natural Order No.	black Order No.
CB-R 200/7.5	200 x 7.5	6	50	220	100	1059200000	1059210000
CB-R 250/7.5	250 x 7.5	6	65	220	100	1059220000	1059230000
CB-R 350/7.5	350 x 7.5	6	100	220	100	1059240000	1059250000

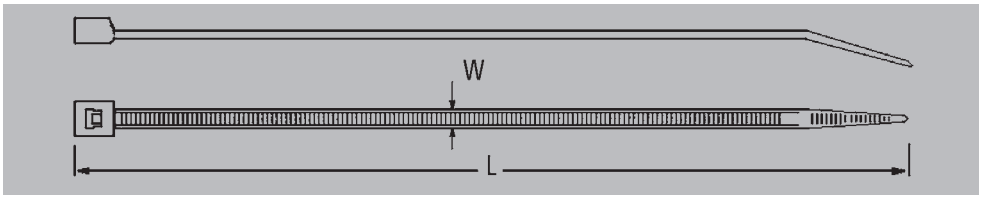

Accessories – holders

CBH 8.1/6.2	Cable tie retainer for use on mounting plate Max. plate thickness 3.2 mm, hole Ø max. 6.2 mm
CBH 19/19	Cable tie retainer for sticking on, surface: 19 x 19 mm
CBH 27/27	Cable tie retainer for sticking on, surface: 27 x 27 mm
CBDM	Cable tie direct mounting for cable harness max. Ø 50 mm, total length: 200 mm
CBFP	Cable tie retainer for wall mounting for cable ties with a width of max. 9 mm

Ordering data

Type	Dimensions (LxW) mm	Min. (mm) bundle-Ø	Max. (mm) bundle-Ø	Min. Tensile strength in N	Qty.	natural Order No.	black Order No.
CBH 8.1/6.2	8.1 x 6.2				100	**1279200000**	
CBH 19/19	19 x 19				100	**1289200000**	**1697950000**
CBH 27/27	27 x 27				100	**1289400000**	**1697960000**
CBDM 200/4.5	200 x 4,5	50	220		100	**1279300000**	
CBFP 43.5/10	43.5 x 10				100		**1859410000**

D

Cable tie tools are compact tools with which the cable tie is tightened and the excess tie cut off in one operation.

Accessories tool

Ordering data

Order No.	Type	Colour	Length	Weight	Qty.
1296000000	CABLE TIE TOOL RT-1	Red	160 mm	260	1
1774470000	WSM TOOL AUTOMATIK	Silver	275 mm	579	1
1774480000	WSM TOOL MANUELL	Silver	220 mm	633	1

Device markers

Device markers	Introduction	E.2
	DMC MultiCard – equipment identification via wire and cables	E.6
	ESG MultiCard – cross-manufacturer equipment identification	E.8
	SM MultiCard – marker system for control and signalling devices	E.26
	CC MultiCard – identification of electrical installations and switchgear	E.36
	Tag rails – identification for side-by-side devices	E.44
	MetalliCard – individual processing	E.48
	Labels – MultiMark and THM	E.60
	KSW – PCB plug-in connector labels	E.72

Markers for devices and installations

Device and installation markers round off our range of switchgear markers. Employing our device markers means you will be in compliance with official regulations on the marking of electrical equipment. Weidmüller offers corresponding markers for devices made by well-known manufactures. Mirroring their original counterparts, these markers are attached with the traditional adhesive or rapid clip-on techniques. By using the corresponding software and system-compatible printer or plotter system, you can print your own markings on these markers.

ESG
The ESG MultiCard markers are for all well-known device manufacturers; with all-purpose usage thanks to self-adhesive or snap-on markers.

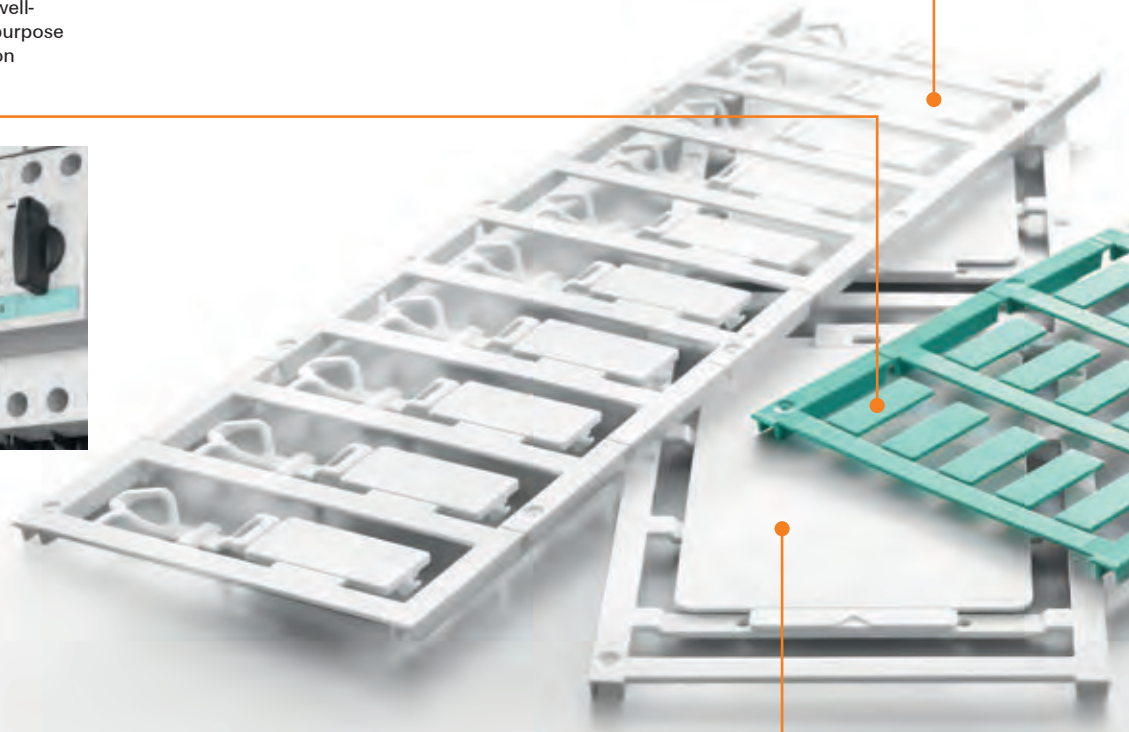

ClipCard
ClipCard MultiCard markers are a genuine alternative to engraving. Flexible fastening options using holders, tag rails, self-adhesive, screws or rivets.

DMC
The marking surface (12 x 27 mm) is large enough to hold information about the device and its function. The markers are fastened to a wire or cable by means of a simple clip-on mechanism.

SwitchMark
SwitchMark MultiCard markers are ideal for identifying control and signalling equipment.

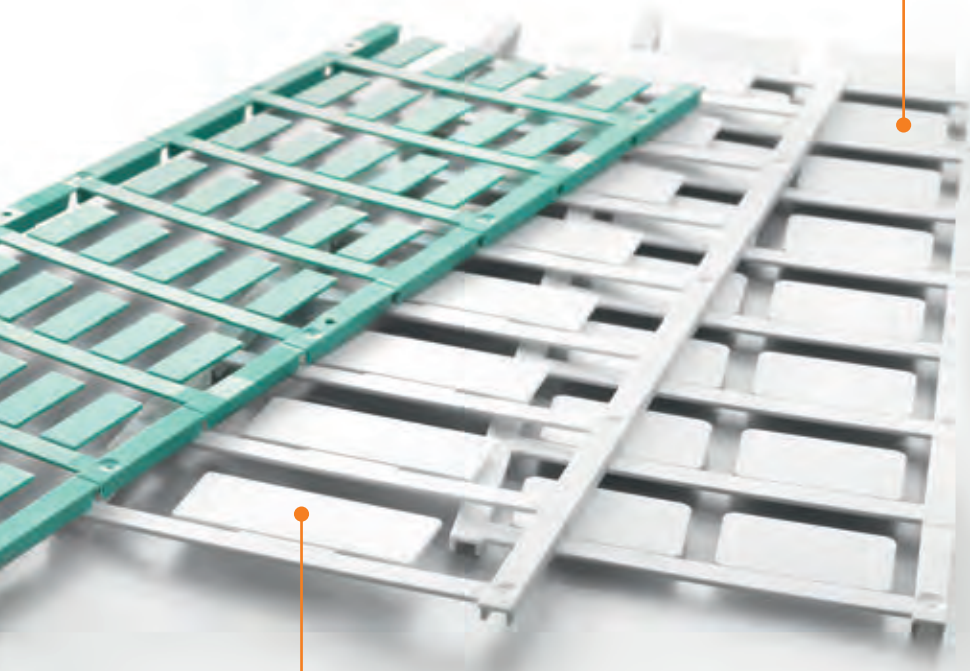

ELS
Optimally designed for use in WKM cable markers or SchT 5-type tag carriers, the ELS tags meet the highest requirements where prominent identification of cables and terminal strips is needed.

PrintJet ADVANCED
In combination with the M-Print® PRO software, the PrintJet ADVANCED inkjet printer is the optimum addition to the MultiCard range for high-quality, resistant, colour printing on site.

www.PrintJetADVANCED.com

Markers for devices and installations

Device and installation markers round off our range of switchgear markers. Employing our device markers means you will be in compliance with official regulations on the marking of electrical equipment. Weidmüller offers corresponding markers for devices made by well-known manufactures. Mirroring their original counterparts, these markers are attached with the traditional adhesive or rapid clip-on techniques. By using the corresponding software and system-compatible printer or plotter system, you can print your own markings on these markers.

A samples box containing a selection of device and installation markers is available under the order no. **1646370000**.

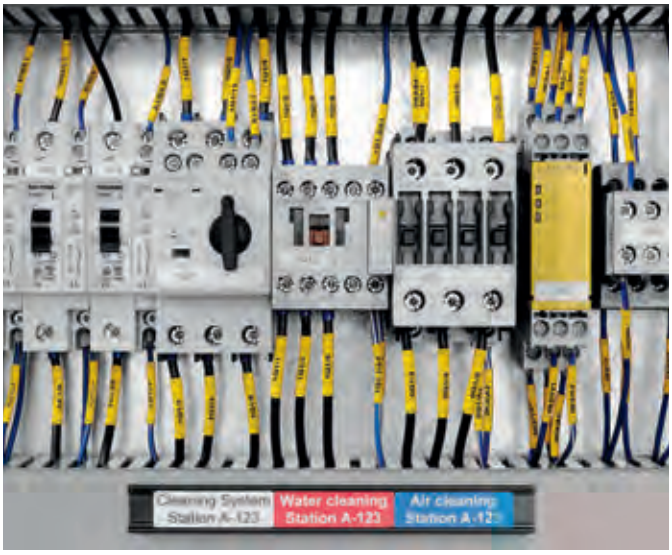

	DMC	ESG	SwitchMark	ClipCard	MetalliCard	MultiMark	Labels
Cable ducts				●	●	●	●
Automatic switchgear	●	●	●	●	●	●	●
Contactors	●	●	●			●	●
Electrical connections	●			●	●	●	●
Electrical devices	●			●	●	●	●
Machines					●		●
LED displays			●		●	●	
Keyboards			●	●	●	●	●
Lamps					●		
Murr valve plug		●					
Tubes				●	●		●
Circuit-breakers	●	●			●	●	●
Relays	●	●				●	●
Shelves					●		●
Switches		●	●	●		●	●
Control desk		●	●	●	●	●	●
Transformers	●	●			●	●	●
Valves				●	●		●

SIEMENS
4Q1
1Q1a
2Q2
206.K1
205.K1
204.K1
Water cleaning
Station A-124
Air cleaning
Station A-124
Cleaning System
Station A-125

DMC MultiCard

Reliable equipment identification on wires and cables

Snap-fit mechanism for absolutely secure attachment

Maximum visibility when labelling switching devices or components can be achieved using the single-piece DMC markers. The sophisticated snap-fit mechanism gives a reliable hold on multi-core control cables, as well as on individual wires. This is a valuable advantage when critical equipment informations needs to be well positioned in order to be visible, even with extremely tight space constraints. It should be firmly fixed to wire and cable diameters from 1.5 to 7.5 mm.

DMC – the benefits to you

- Clever: snap-fit mechanism for quick and secure application
- Versatile: can be attached to one or more connection wires
- Distinctive: a large labelling area gives you all the information at a glance

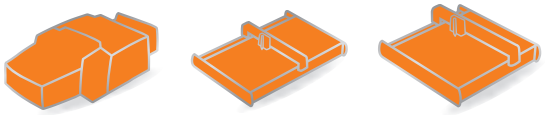

PrintJet ADVANCED | Plotter MCP Plus 2 | Plotter MCP Basic 2

Simply and securely: the clip assembly onto wires with cross-sections from 0.5 to 10 mm².

Creates space: equipment identification for clear additional information can be simply attached to wires or cables.

Halogen Free

Technical data

Material	Polyamide 66, halogen-free
UL 94 flammability rating	V2
Temperature range	–40 °C to 100 °C

Ordering data

Colour	International colour code colours, not contained in the range, are available on request.
Special printing	Specify special printing and colours per using the M-Print® PRO software.
Printing	Black or colour
Possible printing systems	PrintJet ADVANCED, PrintJet PRO, MCP Plus 2, MCP Basic 2
Marking surface	12 x 27 mm
Suitable for cable diameters	1.5 – 7.5 mm
And wire cross-sections	0.5 – 10 mm²
Minimum order quantity	1 pack = 5 cards

Absolutely secure grip thanks to the snap-fitting and the flexible hinge assembly on the rear.

DMC MultiCard

DMC 12/27 | **27 mm**

Technical data

Material	Polyamide 66
Fire class acc. to UL 94	V-2
Ambient temperature (operational)	-40 °C...100 °C
Outer diameter of the wire, min. / max.	1.5...7.5 mm
Wire cross-section, min. / max.	0.5...10 mm²
Width	27 mm
Length	12 mm

Ordering data

MultiCard Blank	Type	Qty.	Order No.
Yellow	DMC 12/27 MC NE GE	50	1018190000
White	DMC 12/27 MC NE WS	50	1016030000
MultiCard custom printing			
To customer specification	DMC 12/27 MC SDR	10	1038830000

Technical drawing / application

ESG MultiCard

For independent manufacturer equipment identification

More clarity thanks to the uniform marking matrix

You can solve the identification of independent manufacturer equipment with the uniform and systematically constructed ESG-type MultiCard range. The carefully matched components bring together equipment from different manufacturers strictly and systematically, in a uniform marking matrix, which is reinforced by the high-quality and brilliance of the PrintJet ADVANCED printing. In this way you can create perfect clarity in the electrical cabinet at the highest level of professionalism.
ESG-markers are available for equipment from the following manufacturers, including: ABB-Stotz, AEG, Beckhoff, Berneker & Rainer, Eaton-Moeller, Festo, Lumberg, Siemens and Telemecanique (Schneider Electric).

ESG – the benefits to you

- Manufacturer-independent: for equipment from the best-known providers
- Systematic: perfectly matching marking components in one range
- Compatible: a suitable marker for every device
- Time saving: no pre-selection needed – fast installation procedures

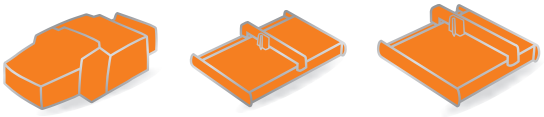

PrintJet ADVANCED | Plotter MCP Plus 2 | Plotter MCP Basic 2

Individual signs of the ESG-range are compatible with our universal-use sign rails which are particularly suitable for rows of equipment and switches.

As well as snapping on, you can also fasten in place using the adhesive which provides an alternative method of securing and gives a secure attachment for every application.

Halogen Free

Technical data

Material	Polyamide 66, halogen-free
UL 94 flammability rating	V2
Temperature range	–40 °C to 100 °C

Ordering data

Colour	International colour code colours, not contained in the range, are available on request.
Special printing	Specify special printing and colours per using the M-Print® PRO software.
Printing	Black or colour
Possible printing systems	PrintJet ADVANCED, PrintJet PRO, MCP Plus 2, MCP Basic 2
Not printable with	SMark Laser with self-adhesive markers
Minimum order quantity	1 pack = 5 cards

ESG MultiCard

	ESG 5/10	5 mm	ESG 6/15 K	6 mm

Technical data

Material	Polyamide 66	Polyamide 66
Fire class acc. to UL 94	V-2	V-2
Ambient temperature (operational)	-40 °C...100 °C	-40 °C...100 °C
Application/manufacturer	Beckhoff, Turck, SAI distributor	Self-adhesive
Width	5 mm	6 mm
Length	10 mm	15 mm

Ordering data

MultiCard Blank		Type	Qty.	Order No.	Type	Qty.	Order No.
White	❍	ESG 5/10 MC NE WS	400	1919940000	ESG 6/15 K MC NE WS	200	1880100000
Yellow	●				ESG 6/15 K MC NE GE	200	1880130000
MultiCard custom printing							
To customer specification		ESG 5/10 MC SDR	80	1038840000	ESG 6/15 K MC SDR	40	1880090000

Technical drawing / application

ESG MultiCard

ESG 6/15 F	6 mm

ESG 6/15 RIDERSERIES	6 mm

Technical data

Material	Polyamide 66	Polyamide 66
Fire class acc. to UL 94	V-2	V-2
Ambient temperature (operational)	-40 °C...100 °C	-40 °C...100 °C
Application/manufacturer	Festo	Riderseries SCM/SRC
Width	6 mm	6 mm
Length	15 mm	15 mm

Ordering data

MultiCard Blank			
White	❍		
Yellow	●		
MultiCard custom printing			
To customer specification			

Type	Qty.	Order No.
ESG 6/15 F MC NE WS	200	**1136810000**

Type	Qty.	Order No.
ESG 6/15 RIDER MC NE WS	200	**1881280000**
ESG 6/15 RIDER MC NE GE	200	**1378710000**
ESG 6/15 RIDER MC SDR	40	**1881290000**

Technical drawing / application

ESG MultiCard

	ESG 6/17 K	6 mm	ESG 6.6/11	6.6 mm

Technical data

Material	Polyamide 66	Polyamide 66
Fire class acc. to UL 94	V-2	V-2
Ambient temperature (operational)	-40 °C...100 °C	-40 °C...100 °C
Application/manufacturer	Self-adhesive	BHZ, ACT 20
Width	6 mm	6.6 mm
Length	17 mm	11 mm

Ordering data

MultiCard Blank		Type	Qty.	Order No.	Type	Qty.	Order No.
White	❍	ESG 6/17 K MC NE WS	200	1880120000	ESG 6.6/11 BHZ 5.00/02	200	1082490000
Yellow	●	ESG 6/17 K MC NE GE	200	1880110000			
MultiCard custom printing							
To customer specification		ESG 6/17 K MC SDR	40	1880080000	ESG 6.6/11 BHZ 5.00 SDR	200	1346330000

Technical drawing / application

ESG MultiCard

ESG 6.6/15	6.6 mm	ESG 6.6/20	6.6 mm

Technical data

Material	Polyamide 66	Polyamide 66
Fire class acc. to UL 94	V-2	V-2
Ambient temperature (operational)	-40 °C...100 °C	-40 °C...100 °C
Application/manufacturer	BHZ, ACT 20	BHZ, ACT 20
Width	6.6 mm	6.6 mm
Length	15 mm	20 mm

Ordering data

MultiCard Blank					
White	❍	Type	Qty.	Order No.	Type	Qty.	Order No.
Yellow	●	ESG 6.6/15 BHZ 5.00/03	200	1082520000	ESG 6.6/20 BHZ 5.00/04	200	1082540000
MultiCard custom printing							
To customer specification		ESG 6.6/15 BHZ 5.00 SDR	200	1346320000	ESG 6.6/20 BHZ 5.00 SDR	40	1221520000

Technical drawing / application

ESG MultiCard

	ESG 7/20 Sirius	7 mm	ESG 8/10	8 mm

Technical data

Material	Polyamide 66	Polyamide 66
Fire class acc. to UL 94	V-2	V-2
Ambient temperature (operational)	-40 °C...100 °C	-40 °C...100 °C
Application/manufacturer	Siemens Sirius 3R	Siemens AS-Interface
Width	7 mm	8 mm
Length	20 mm	10 mm

Ordering data

MultiCard Blank		Type	Qty.	Order No.	Type	Qty.	Order No.
Yellow	●	ESG 7/20 SIRIUS MC NE GE	200	1736181687			
Turquoise	●	ESG 7/20 SIRIUS MC NE TU	200	1736181696			
White	○	ESG 7/20 SIRIUS MC NE WS	200	1736181044	ESG 8/10 ASI MC NE WS	200	1736190000
MultiCard custom printing							
To customer specification		ESG 7/20 SIRIUS SDR	40	1766650000	ESG 8/10 ASI MC SDR	40	1770470000

Accessories

Tag rail	Type	Qty.	Order No.	Type	Qty.	Order No.
	SCHS3 K	1	1753480000			
	SCHS4 K	1	1753460000			

Technical drawing / application

ESG MultiCard

	ESG 8/11	8 mm	ESG 8/13.5/43.3	8 mm

Technical data

Material	Polyamide 66	Polyamide 66
Fire class acc. to UL 94	V-2	V-2
Ambient temperature (operational)	-40 °C...100 °C	-40 °C...100 °C
Application/manufacturer	Beckhoff, WAGO I/O Module	WI SAI ACTIVE
Width	8 mm	8 mm
Length	11 mm	13.5 mm

Ordering data

MultiCard Blank		Type	Qty.	Order No.	Type	Qty.	Order No.
White	❍	ESG 8/11 MC NE WS	200	1897570000			
Transparent					ESG 8/13.5/43.3 SAI AU	5	1912130000
MultiCard custom printing							
To customer specification		ESG 8/11 MC SDR	40	1038850000	ESG 8/13.5/43.3 SAI SDR	1	1038860000

Technical drawing / application

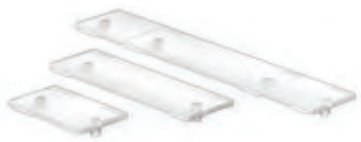

ESG MultiCard

	ESG 8/17	8 mm	ESG 8/17 L	8 mm

Technical data

Material	Polyamide 66	Polyamide 66
Fire class acc. to UL 94	V-2	V-2
Ambient temperature (operational)	-40 °C...100 °C	-40 °C...100 °C
Application/manufacturer	Telemecanique	Lumberg
Width	8 mm	8 mm
Length	17 mm	17 mm

Ordering data

MultiCard Blank		Type	Qty.	Order No.	Type	Qty.	Order No.
White	❍	ESG 8/17 MC NE WS	200	1674740000	ESG 8/17 L MC NE WS	200	1890470000
Transparent							
MultiCard custom printing							
To customer specification		ESG 8/17 MC SDR	40	1674750000	ESG 8/17 L MC SDR	40	1038870000

Technical drawing / application

ESG MultiCard

ESG 8/17 SCHS	8 mm

ESG 8/17 SYS PRO	8 mm

Technical data

Material	Polyamide 66	Polyamide 66
Fire class acc. to UL 94	V-2	V-2
Ambient temperature (operational)	-40 °C...100 °C	-40 °C...100 °C
Application/manufacturer	Tag rail SchS2	AEG, ABB-Stotz
Width	8 mm	8 mm
Length	17 mm	17 mm

Ordering data

MultiCard Blank		Type	Qty.	Order No.	Type	Qty.	Order No.
White	❍	ESG 8/17 SCHS MC NE WS	200	1720610000	ESG 8/17 SYS PRO M WS	200	1755340000
MultiCard custom printing							
To customer specification		ESG 8/17 SCHS MC SDR	40	1766640000	ESG 8/17 SYS PRO M SDR	40	1755350000

Accessories

Type	Qty.	Order No.	Type	Qty.	Order No.
SCHS2 K	1	1720600000			
SCHS2	1	0337400000			

Technical drawing / application

ESG MultiCard

	ESG 8/19	ESG 9/10
	8 mm	9 mm

Technical data

Material	Polyamide 66	Polyamide 66
Fire class acc. to UL 94	V-2	V-2
Ambient temperature (operational)	-40 °C...100 °C	-40 °C...100 °C
Application/manufacturer	AEG	
Width	8 mm	9 mm
Length	19 mm	10 mm

Ordering data

MultiCard Blank					
White	❍	Type	Qty.	Order No.	Type	Qty.	Order No.
Yellow	●	ESG 8/19 MC NE WS	200	1652220000	ESG 9/10 MC NE WS	200	1775910000
MultiCard custom printing							
To customer specification		ESG 8/19 MC SDR	40	1652230000	ESG 9/10 MC SDR	40	1038880000

Technical drawing / application

ESG MultiCard

	ESG 9/11 K	9 mm	ESG 9/17.7 K	9 mm

Technical data

Material	Polyamide 66	Polyamide 66
Fire class acc. to UL 94	V-2	V-2
Ambient temperature (operational)	-40 °C...100 °C	-40 °C...100 °C
Application/manufacturer	Self-adhesive	LS switch, Self-adhesive
Width	9 mm	9 mm
Length	11 mm	17.7 mm

Ordering data

MultiCard Blank						
White	❍	Type	Qty.	Order No.	Type	Qty.	Order No.
Yellow	●	ESG 9/11 K MC NE WS	200	1857440000	ESG 9/17.7 K MC NE WS	180	2047430000
MultiCard custom printing							
To customer specification		ESG 9/11 K MC SDR	40	1857450000	ESG 9/17.7 K MC SDR	36	2047550000

Technical drawing / application

ESG MultiCard

	ESG 9/17	9 mm	ESG 9/17 K	9 mm

Technical data

Material	Polyamide 66	Polyamide 66
Fire class acc. to UL 94	V-2	V-2
Ambient temperature (operational)	-40 °C...100 °C	-40 °C...100 °C
Application/manufacturer	CLI TM sleeve	Self-adhesive
Width	9 mm	9 mm
Length	17 mm	17 mm

Ordering data

MultiCard Blank					
White	❍	Type	Qty.	Order No.	Type	Qty.	Order No.
Yellow	●	ESG 9/17 MC NE WS	200	1724760000	ESG 9/17 K MC NE WS	200	1674760000
					ESG 9/17 K MC NE GE	200	1753500000
MultiCard custom printing							
To customer specification		ESG 9/17 MC SDR	40	1770480000	ESG 9/17 K MC SDR	40	1674770000

Technical drawing / application

ESG MultiCard

	ESG 9/20	ESG 9/20 L
	9 mm	9 mm

Technical data

Material	Polyamide 66	Polyamide 66
Fire class acc. to UL 94	V-2	V-2
Ambient temperature (operational)	-40 °C...100 °C	-40 °C...100 °C
Application/manufacturer	Siemens, Moeller, WI SAI distributor	Lumberg
Width	9 mm	9 mm
Length	20 mm	20 mm

Ordering data

MultiCard Blank	Type	Qty.	Order No.	Type	Qty.	Order No.
Yellow	ESG 9/20 MC NE GE	200	1766160000	ESG 9/20 L MC NE GE	200	1010860000
Turquoise	ESG 9/20 MC NE TK	200	1866690000			
White	ESG 9/20 MC NE WS	200	1609940000	ESG 9/20 L MC NE WS	200	1890460000
MultiCard custom printing						
To customer specification	ESG 9/20 MC SDR	40	1609950000	ESG 9/20 L MC SDR	40	1968140000

Technical drawing / application

ESG MultiCard

	ESG 9/20 O.F. 9 mm	ESG 9/20 Universal 9 mm

Technical data

Material	Polyamide 66	Polyamide 66
Fire class acc. to UL 94	V-2	V-2
Ambient temperature (operational)	-40 °C...100 °C	-40 °C...100 °C
Application/manufacturer	TMC sleeve	Murr, Festo CPV/CPI
Width	9 mm	9 mm
Length	20 mm	20 mm

Ordering data

MultiCard Blank		Type	Qty.	Order No.	Type	Qty.	Order No.
White	❍	ESG 9/20 O.F MC NE WS	200	1770500000	ESG 9/20 UNI MC NE WS	200	1856720000
Blue	●						
Orange	●						
Red	●						
Yellow	●						
Grey	●						
MultiCard custom printing							
To customer specification		ESG 9/20 O.F MC SDR	40	1770510000	ESG 9/20 UNI MC SDR	40	1856730000

Accessories

Type	Qty.	Order No.	Type	Qty.	Order No.
TMC 9/20	240	1724790000			

Technical drawing / application

ESG MultiCard

ESG 9/6	9 mm	ESG 10/17	10 mm

Technical data

Material	Polyamide 66	Polyamide 66
Fire class acc. to UL 94	V-2	V-2
Ambient temperature (operational)	-40 °C...100 °C	-40 °C...100 °C
Application/manufacturer	WI SAI ACTIVE	Allen-Bradley, Festo MT
Width	9 mm	10 mm
Length	6 mm	17 mm

Ordering data

MultiCard Blank		Type	Qty.	Order No.	Type	Qty.	Order No.
White	❍	ESG 9/6 MC NE WS	400	1888360000	ESG 10/17 MC NE WS	200	1856700000
Blue	●						
Orange	●						
Red	●						
Yellow	●						
Grey	●						
MultiCard custom printing							
To customer specification		ESG 9/6 MC SDR	80	1038940000	ESG 10/17 MC SDR	40	1856710000

Technical drawing / application

ESG MultiCard

	ESG X20 10/7	7 mm	ESG B&R X20	2.5 mm

Technical data

Material	Polyamide 66	Polyamide 66
Fire class acc. to UL 94	V-2	V-2
Ambient temperature (operational)	-40 °C...100 °C	-40 °C...100 °C
Application/manufacturer	B&R X20 System	B&R X20 System
Width	7 mm	2.5 mm
Length	10 mm	10 mm

Ordering data

MultiCard Blank		Type	Qty.	Order No.	Type	Qty.	Order No.
White	❍	ESG X20 10/7 MC NE WS	240	1026550000	ESG X20 MC NE WS	1120	1001140001
Blue	●	ESG X20 10/7 MC NE BL	240	1026560000	ESG X20 MC NE BL	1120	1001150001
Orange	●	ESG X20 10/7 MC NE OR	240	1026580000	ESG X20 MC NE OR	1120	1001160001
Red	●	ESG X20 10/7 MC NE RT	240	1026570000	ESG X20 MC NE RT	1120	1001170001
Yellow	●						
Grey	●						
MultiCard custom printing							
To customer specification		ESG X20 10/7 MC SDR	48	1038930000	ESG X20 MC SDR	224	1038890000

Technical drawing / application

ESG MultiCard – cross-manufacturer equipment identification

ESG MultiCard

ESG 15/10	15 mm	ESG 9/26 SCM ECO	26 mm

Technical data

Material	Polyamide 66	Polyamide 66
Fire class acc. to UL 94	V-2	V-2
Ambient temperature (operational)	-40 °C...100 °C	-40 °C...100 °C
Application/manufacturer	Siemens ET 200SP	Weidmueller, D-Series 27 mm
Width	15 mm	26 mm
Length	10 mm	9 mm

Ordering data

MultiCard Blank		Type	Qty.	Order No.	Type	Qty.	Order No.
White	❍	ESG 15/10 MC NE WS	160	2047360000	ESG 9/26 SCM ECO MC NE WS	80	1520980000
Blue	●						
Orange	●						
Red	●						
Yellow	●				ESG 9/26 SCM ECO MC NE GE	80	1520990000
Grey	●				ESG 9/26 SCM ECO MC NE GR	80	1521000000
MultiCard custom printing							
To customer specification		ESG 15/10 MC SDR	32	2047540000	ESG 9/26 SCM ECO MC SDR	80	1525800000

Technical drawing / application

ESG MultiCard

	ESG-M 8/20	ESG-M 9/17
	8 mm	9 mm

Technical data

Material	Polyamide 66	Polyamide 66
Fire class acc. to UL 94	V-2	V-2
Ambient temperature (operational)	-40 °C...100 °C	-40 °C...100 °C
Application/manufacturer	Murr Cube67 & MVK MP	Murr MVP Module
Width	8 mm	9 mm
Length	20 mm	17 mm

Ordering data

MultiCard Blank		Type	Qty.	Order No.	Type	Qty.	Order No.
White	❍	ESG-M 8/20 MC NE WS	200	1027290000	ESG-M 9/17 MC NE WS	200	1027280000
Blue	●						
Orange	●						
Red	●						
Yellow	●						
Grey	●						
MultiCard custom printing							
To customer specification		ESG-M 8/20 MC SDR	40	1038910000	ESG-M 9/17 MC SDR	40	1038920000

Technical drawing / application

SM – SwitchMark MultiCard

Exemplary functional marking for control and signalling devices

Equipment-specific labelling for safe control

To avoid incorrect operation, clear identification is essential when controlling the functions of control and signalling devices. Designed specifically to meet this need, the SwitchMark system covers the entire range of requirements of the respective application areas. The signs are snapped into the holders designed for the different manufacturers' control and signalling devices or fastened in place using the adhesive tape that has been applied previously. Alternatively, choose a set containing both holders and signs. Even for the many variations in cam-switch positions, the SwitchMark range contains the appropriately shaped signs for accurate labelling. Combined with Weidmüller's marking systems, you can print the signs independently and as required for the application in an individual layout – including all the relevant additional information.

SwitchMark – the benefits to you

- Practical: signs for various device manufacturers or holders with shields from Weidmüller in a set
- Easy to install: glue or snap in place
- Individual: application-precise in terms of number and labelling
- Cost efficient: no need to store standard signs

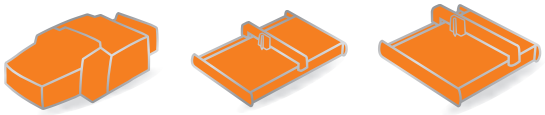

PrintJet ADVANCED | Plotter MCP Plus 2 | Plotter MCP Basic 2

Holders and signs are available in sets in the most common sizes and versions for control and signalling devices from Siemens (type 35B) or ABB (type ONFB72).

You can use the SwitchMark system-solution to cover a variety of cam controllers from various manufacturers.

Halogen Free

Technical data

Material	Polyamide 66, halogen-free
UL 94 flammability rating	V2
Temperature range	–40 °C to 100 °C

Ordering data

Colour	International colour code colours, not contained in the range, are available on request.
Special printing	Specify special printing and colours per using the M-Print® PRO software.
Printing	Black or colour
Possible printing systems	PrintJet ADVANCED, PrintJet PRO, MCP Plus 2, MCP Basic 2
Not printable with	SMark Laser with self-adhesive markers
Minimum order quantity	1 pack = 5 cards

SwitchMark MultiCard

	SM 18/9.5	18 mm	SM 19/42	42 mm

Technical data

Material	Polyamide 66	Polyamide 66
Fire class acc. to UL 94	V-2	V-2
Ambient temperature (operational)	-40 °C...60 °C	-40 °C...60 °C
Application/manufacturer	Siemens 3 SB	
Width	18 mm	42 mm
Length	9.5 mm	19 mm

Ordering data

MultiCard Blank	Type	Qty.	Order No.	Type	Qty.	Order No.
Yellow						
Grey						
Silver						
White						
Black						
Red						
MultiCard custom printing						
To customer specification						
MultiCard Blank, self adhesive						
Yellow	SM 18/9.5 K MC NE GE	200	1248590000	SM 19/42 K MC NE GE	40	1248630000
Grey	SM 18/9.5 K MC NE GR	200	1248610000	SM 19/42 K MC NE GR	40	1248640000
White	SM 18/9.5 K MC NE WS	200	1248580000	SM 19/42 K MC NE WS	40	1248620000
Silver						
Red						
MultiCard Blank, self adhesive, custom printing						
To customer specification	SM 18/9.5 K MC SDR	40	1248550000	SM 19/42 K MC SDR	8	1248560000

Technical drawing / application

SwitchMark MultiCard

	SM 22/22	22 mm	SM 27/8	27 mm

Technical data

Material	Polyamide 66	Polyamide 66
Fire class acc. to UL 94	V-2	V-2
Ambient temperature (operational)	-40 °C...100 °C	-40 °C...100 °C
Application/manufacturer		
Width	22 mm	27 mm
Length	22 mm	8 mm

Ordering data

MultiCard Blank		Type	Qty.	Order No.	Type	Qty.	Order No.
Yellow	●				SM 27/8 MC NE GE	80	1131870000
Grey	●				SM 27/8 MC NE GR	80	1079470000
Silver	●				SM 27/8 MC NE SI	80	1713680000
White	○				SM 27/8 MC NE WS	80	1699820000
Black	●						
Red	●						
MultiCard custom printing							
To customer specification					SM 27/8 MC SDR	16	1699830000
MultiCard Blank, self adhesive							
Yellow	●	SM 22/22 K MC NE GE	80	1131830000	SM 27/8 K MC NE GE	80	1131820000
Grey	●	SM 22/22 K MC NE GR	80	1014650000	SM 27/8 K MC NE GR	80	1079480000
White	○	SM 22/22 K MC NE WS	80	1877570000	SM 27/8 K MC NE WS	80	1812630000
Silver	●	SM 22/22 K MC NE SI	80	1877590000	SM 27/8 K MC NE SI	80	1771930000
Red	●						
MultiCard Blank, self adhesive, custom printing							
To customer specification		SM 22/22 K MC SDR	16	1877580000	SM 27/8 K SONDERDRUCK	16	1713690000

Accessories

Protective film	Type	Qty.	Order No.	Type	Qty.	Order No.
	ETO SM 22/22 TRANSPAR.	10	1880720000	ETO SM 27/8	10	1720570000
SwitchMark holder						

Technical drawing / application

SwitchMark MultiCard

	SM 27/12.5	27 mm	SM 27/18	27 mm

Technical data

Material	Polyamide 66	Polyamide 66
Fire class acc. to UL 94	V-2	V-2
Ambient temperature (operational)	-40 °C...100 °C	-40 °C...100 °C
Application/manufacturer		
Width	27 mm	27 mm
Length	12.5 mm	

Ordering data

MultiCard Blank	Type	Qty.	Order No.	Type	Qty.	Order No.
Yellow	SM 27/12.5 MC NE GE	80	1131860000	SM 27/18 MC NE GE	80	1131850000
Grey	SM 27/12.5 MC NE GR	80	1079490000	SM 27/18 MC NE GR	80	1014640000
Silver	SM 27/12.5 MC NE SI	80	1713700000	SM 27/18 MC NE SI	80	1713740000
White	SM 27/12.5 MC NE WS	80	1699840000	SM 27/18 MC NE WS	80	1699860000
Black	SM-H 27/12.5 SW	25	1716640000	SM-H 27/18 SW	25	1716630000
Red				SM 27/18 MC NE RT	80	1906110000
MultiCard custom printing						
To customer specification	SM 27/12.5 SDR	16	1699850000	SM 27/18 MC SDR	16	1699870000
MultiCard Blank, self adhesive						
Yellow	SM 27/12.5 K MC NE GE	80	1131810000	SM 27/18 K MC NE GE	80	1915340000
Grey	SM 27/12.5 K MC NE GR	80	1027830000	SM 27/18 K MC NE GR	80	1073340000
White	SM 27/12.5 K MC NE WS	80	1699880000	SM 27/18 K MC NE WS	80	1707270000
Silver	SM 27/12.5 K MC NE SI	80	1713720000	SM 27/18 K MC NE SI	80	1713760000
Red				SM 27/18 K MC NE RT	80	1906120000
MultiCard Blank, self adhesive, custom printing						
To customer specification	SM 27/12.5 K MC SDR	16	1699890000	SM 27/18 K MC SDR	16	1707280000

Accessories

Protective film	Type	Qty.	Order No.	Type	Qty.	Order No.
	ETO SM 27/12,5	10	1720580000	ETO SM 27/18 TRANSPAR.	10	1720590002
SwitchMark holder						
	SM-H 27/12.5 SW	25	1716640000	SM-H 27/18 SW	25	1716630000

Technical drawing / application

SwitchMark MultiCard

	SM 27/27	27 mm	SM 37.5/17	37.5 mm

Technical data

Material	Polyamide 66	Polyamide 66
Fire class acc. to UL 94	V-2	V-2
Ambient temperature (operational)	-40 °C...100 °C	-40 °C...100 °C
Application/manufacturer		
Width	27 mm	37.5 mm
Length	27 mm	17 mm

Ordering data

MultiCard Blank	Type	Qty.	Order No.	Type	Qty.	Order No.
Yellow	SM 27/27 MC NE GE	60	1131840000			
Grey	SM 27/27 MC NE GR	60	1079510000	SM 37.5/17 MC NE GR	40	1336720000
Silver	SM 27/27 MC NE SI	60	1773230000			
White	SM 27/27 MC NE WS	60	1773220000	SM 37.5/17 MC NE WS	40	1336710000
Black	SM-H 27/27 SW	10	1782710000			
Red						
MultiCard custom printing						
To customer specification	SM 27/27 MC SDR	12	1773240000	SM 37.5/17 MC SDR	8	1336680000
MultiCard Blank, self adhesive						
Yellow	SM 27/27 K MC NE GE	60	1131800000			
Grey	SM 27/27 K MC NE GR	60	1079520000			
White	SM 27/27 K MC NE WS	60	1783000000			
Silver	SM 27/27 K MC NE SI	60	1782990000			
Red						
MultiCard Blank, self adhesive, custom printing						
To customer specification	SM 27/27 K MC SDR	12	1783010000			

Accessories

Protective film	Type	Qty.	Order No.	Type	Qty.	Order No.
	ETO SM 27/27	10	1805840000			
SwitchMark holder						
	SM-H 27/27 SW	10	1782710000			

Technical drawing / application

SwitchMark MultiCard

	SM 27/18-22	27 mm	SM 36/18-30	18 mm

Technical data

Material	Polyamide 66	Polyamide 66
Fire class acc. to UL 94	V-2	V-2
Ambient temperature (operational)	-40 °C...100 °C	-40 °C...100 °C
Application/manufacturer		
Width	27 mm	18 mm
Length	18 mm	36 mm

Ordering data

MultiCard Blank	Type	Qty.	Order No.	Type	Qty.	Order No.
Yellow						
Grey						
Silver						
White						
Black						
Red						
MultiCard custom printing						
To customer specification						
MultiCard Blank, self adhesive						
Yellow						
Grey	SM 27/18-22 K MC NE GR	40	1428180000	SM 36/18-30 K MC NE GR	20	1428200000
White	SM 27/18-22 K MC NE WS	40	1428170000	SM 36/18-30 K MC NE WS	20	1428190000
Silver						
Red						
MultiCard Blank, self adhesive, custom printing						
To customer specification	SM 27/18-22 K MC SDR	8	1433870000	SM 36/18-30 K MC SDR	4	1433860000

Technical drawing / application

SwitchMark MultiCard

	SM 42/42-30	42 mm	SM 44/44-21	44 mm

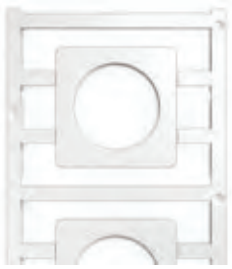

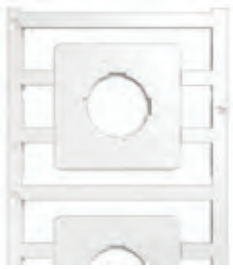

Technical data

Material	Polyamide 66	Polyamide 66
Fire class acc. to UL 94	V-2	V-2
Ambient temperature (operational)	-40 °C...100 °C	-40 °C...100 °C
Application/manufacturer	for cam switches, Type T0	for cam switches, ABB, Type ON and OL40
Width	42 mm	44 mm
Length	42 mm	44 mm

Ordering data

MultiCard Blank		Type	Qty.	Order No.	Type	Qty.	Order No.
Yellow	●				SM 44/44-21 MC NE GE	20	1323580000
Grey	●				SM 44/44-21 MC NE GR	20	1323600000
Silver	●						
White	○				SM 44/44-21 MC NE WS	20	1323570000
Black	●						
Red	●						
MultiCard custom printing							
To customer specification					SM 44/44-21 MC SDR	4	1323640000
MultiCard Blank, self adhesive							
Yellow	●	SM 42/42-30 K MC NE GE	20	1323540000			
Grey	●	SM 42/42-30 K MC NE GR	20	1323550000			
White	○	SM 42/42-30 K MC NE WS	20	1323530000			
Silver	●						
Red	●						
MultiCard Blank, self adhesive, custom printing							
To customer specification		SM 42/42-30 K MC SDR	4	1323620000			

Technical drawing / application

SwitchMark MultiCard

	SM 45/45-24	45 mm	SM 46/46-30	46 mm

Technical data

Material	Polyamide 66	Polyamide 66
Fire class acc. to UL 94	V-2	V-2
Ambient temperature (operational)	-40 °C...100 °C	-40 °C...100 °C
Application/manufacturer	for cam switches, Eaton Moeller	for cam switches, Type SO, Kraus & Naimer
Width	45 mm	46 mm
Length	45 mm	46 mm

Ordering data

MultiCard Blank	Type	Qty.	Order No.	Type	Qty.	Order No.
Yellow	SM 45/45-24 MC NE GE	20	1248660000	SM 46/46-30 MC NE GE	20	1323510000
Grey	SM 45/45-24 MC NE GR	20	1248670000	SM 46/46-30 MC NE GR	20	1323520000
Silver						
White	SM 45/45-24 MC NE WS	20	1248650000	SM 46/46-30 MC NE WS	20	1323500000
Black						
Red						
MultiCard custom printing						
To customer specification	SM 45/45-24 MC SDR	4	1248570000	SM 46/46-30 MC SDR	4	1323610000
MultiCard Blank, self adhesive						
Yellow						
Grey						
White						
Silver						
Red						
MultiCard Blank, self adhesive, custom printing						
To customer specification						

Technical drawing / application

SwitchMark MultiCard

SM DIA 60-22 | **60 mm**

Technical data

Material	Polyamide 66
Fire class acc. to UL 94	V-2
Ambient temperature (operational)	-40 °C...100 °C
Application/manufacturer	ø 60 - 22 mm, Siemens 3 SB, Eaton Moeller M22-PV
Width	60 mm
Length	60 mm

Ordering data

MultiCard Blank		Type	Qty.	Order No.
Yellow	●			
Grey	●			
Silver	●			
White	○			
Black	●			
Red	●			
MultiCard custom printing				
To customer specification				
MultiCard Blank, self adhesive				
Yellow	●	SM DIA 60-22 K MC NE GE	10	**1323750000**
Grey	●			
White	○			
Silver	●			
Red	●			
MultiCard Blank, self adhesive, custom printing				
To customer specification		SM DIA 60-22 MC SDR	2	**1323740000**

Technical drawing / application

CC – ClipCard MultiCard

The alternative to engraved device markers

Brilliant printing results without of high costs

With its crisply printed labelling area in various sizes, the multi-functional ClipCard is on an equal footing with engraved device markers. Mounted at eye-level, it is the ideal alternative for marking electrical installations and switching facilities, and uses the full range of attachment types.
From simple device identification through to the labelling of pipework, valves, motors or lamps in accordance with DIN V VDE V 0108 (part 100), or creating nameplates with a colour firm logo, you cover the entire marking requirements reliably and cost-efficiently with the ClipCard range.

ClipCard – the benefits to you

- Economic: highly resistant labelling in engraved quality
- Easy to install: all types of attachment in one format
- Comprehensive: a wide range of applications thanks to the variety of sizes and design options

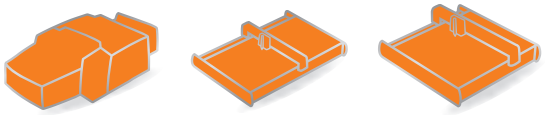

PrintJet ADVANCED | Plotter MCP Plus 2 | Plotter MCP Basic 2

The signs are pre-drilled or have double-sided adhesive tape attached giving you tremendous time savings during installation.

There are matching holders for additional mounting possibilities: snap-locking or using cable ties.

Halogen Free

Technical data

Material	Polyamide 66, halogen-free
UL 94 flammability rating	V2
Temperature range	–40 °C to 100 °C
Temperature range	–40 °C to 60 °C (self-adhesive)
Approved air humidity	Max. 60 %, only for screwable markers

Ordering data

Colour	International colour code colours, not contained in the range, are available on request.
Special printing	Specify special printing and colours per using the M-Print® PRO software.
Printing	Black or colour
Possible printing systems	PrintJet ADVANCED, PrintJet PRO, MCP Plus 2, MCP Basic 2
Not printable with	SMark Laser with self-adhesive markers
Minimum order quantity	1 pack = 5 cards

ClipCard MultiCard

	CC 15/17	17 mm	CC 15/27	27 mm

Technical data

Material	Polyamide 66	Polyamide 66
Fire class acc. to UL 94	V-2	V-2
Ambient temperature (operational)	adhesive backing: -40...60 °C; standard: -40...100 °C	Self adhesive: -40...60 °C; Standard: -40...100 °C
Application/manufacturer		
Width	17 mm	27 mm
Length	15 mm	15 mm

Ordering data

MultiCard Blank	Type	Qty.	Order No.	Type	Qty.	Order No.
Yellow	CC 15/17 MC NE GE	80	1131930000	CC 15/27 MC NE GE	80	1131940000
Grey	CC 15/17 MC NE GR	80	1079530000	CC 15/27 MC NE GR	80	1079550000
Silver	CC 15/17 MC NE SI	80	1876610000	CC 15/27 MC NE SI	80	1876760000
White	CC 15/17 MC NE WS	80	1876570000	CC 15/27 MC NE WS	80	1876770000
Blue						
Green						
Red						
MultiCard custom printing						
To customer specification	CC 15/17 MC SDR	16	1876620000	CC 15/27 MC SDR	16	1876630000
MultiCard Blank, self adhesive						
Yellow	CC 15/17 K MC NE GE	80	1131920000	CC 15/27 K MC NE GE	80	1131910000
Grey	CC 15/17 K MC NE GR	80	1079540000	CC 15/27 K MC NE GR	80	1079560000
Red	CC 15/17 K MC NE RT	80	1288320000	CC 15/27 K MC NE RT	80	1288330000
Silver	CC 15/17 K MC NE SI	80	1876580000	CC 15/27 K MC NE SI	80	1876780000
White	CC 15/17 K MC NE WS	80	1876590000	CC 15/27 K MC NE WS	80	1876640000
MultiCard Blank, self adhesive, custom printing						
To customer specification	CC 15/17 K MC SDR	16	1876600000	CC 15/27 K MC SDR	16	1876750000

Accessories

Type	Qty.	Order No.	Type	Qty.	Order No.
ETO CC 15/17 TRANSPAR.	10	1880850000	ETO CC 15/27 TRANSPAR.	10	1880810000
STR CC 15/17 TRANSPARENT	80	1888310000	STR CC 15/27 TRANSPARENT	80	1888290000
CC-H 15/17	75	1790430000	CC-H 15/27	45	1790410000

Technical drawing / application

ClipCard MultiCard

	CC 15/45	45 mm	CC 15/49	49 mm

Technical data

	CC 15/45	CC 15/49
Material	Polyamide 66	Polyamide 66
Fire class acc. to UL 94	V-2	V-2
Ambient temperature (operational)	Self adhesive: -40...60 °C; Standard: -40...100 °C	Self adhesive: -40...60 °C; Standard: -40...100 °C
Application/manufacturer		
Width	45 mm	49 mm
Length	15 mm	15 mm

Ordering data

MultiCard Blank		Type	Qty.	Order No.	Type	Qty.	Order No.
Yellow	●	CC 15/45 MC NE GE	40	1111230000	CC 15/49 MC NE GE	40	1076970000
Grey	●	CC 15/45 MC NE GR	40	1111240000	CC 15/49 MC NE GR	40	1079570000
Silver	●				CC 15/49 MC NE SI	40	1877240000
White	○	CC 15/45 MC NE WS	40	1111210000	CC 15/49 MC NE WS	40	1877260000
Blue	●						
Green	●						
Red	●						
MultiCard custom printing							
To customer specification		CC 15/45 MC SDR	8	1111190000	CC 15/49 MC SDR	8	1877200000
MultiCard Blank, self adhesive							
Yellow	●	CC 15/45 K MC NE GE	40	1111260000	CC 15/49 K MC NE GE	40	1131970000
Grey	●	CC 15/45 K MC NE GR	40	1111270000	CC 15/49 K MC NE GR	40	1079580000
Red	●				CC 15/49 K MC NE RT	40	1288380000
Silver	●				CC 15/49 K MC NE SI	40	1877270000
White	○	CC 15/45 K MC NE WS	40	1111250000	CC 15/49 K MC NE WS	40	1877220000
MultiCard Blank, self adhesive, custom printing							
To customer specification		CC 15/45 K MC SDR	8	1111200000	CC 15/49 K MC SDR	8	1877230000

Accessories

Type	Qty.	Order No.	Type	Qty.	Order No.
			ETO CC 15/49 TRANSPAR.	10	1880830000
			STR CC 15/49 TRANSPARENT	40	1888300000
			CC-H 15/49	25	1790420000

Technical drawing / application

ClipCard MultiCard

	CC 15/60	60 mm	CC 15/60 04MM	60 mm

Technical data

Material	Polyamide 66	Polyamide 66
Fire class acc. to UL 94	V-2	V-2
Ambient temperature (operational)	Self adhesive: -40...60 °C; Standard: -40...100 °C	Standard: -40...100 °C
Application/manufacturer		With hole
Width	60 mm	60 mm
Length	15 mm	15 mm

Ordering data

MultiCard Blank		Type	Qty.	Order No.	Type	Qty.	Order No.
Yellow		CC 15/60 MC NE GE	40	1131960000			
Grey		CC 15/60 MC NE GR	40	1072640000	CC 15/60 04MM MC NE GR	40	1304060000
Silver		CC 15/60 MC NE SI	40	1877340000	CC 15/60 04MM MC NE SI	40	1059990000
White		CC 15/60 MC NE WS	40	1877350000	CC 15/60 04MM MC NE WS	40	1057580000
Blue							
Green							
Red							
MultiCard custom printing							
To customer specification		CC 15/60 MC SDR	8	1877300000	CC 15/60 04MM MC SDR	8	1060010000
MultiCard Blank, self adhesive							
Yellow		CC 15/60 K MC NE GE	40	1131890000			
Grey		CC 15/60 K MC NE GR	40	1072650000			
Red		CC 15/60 K MC NE RT	40	1288340000			
Silver		CC 15/60 K MC NE SI	40	1877360000			
White		CC 15/60 K MC NE WS	40	1877310000			
MultiCard Blank, self adhesive, custom printing							
To customer specification		CC 15/60 K MC SDR	8	1877320000			

Accessories

Type	Qty.	Order No.	Type	Qty.	Order No.
ETO CC 15/60 TRANSPAR.	10	1880840000			
STR CC 15/60 TRANSPARENT	40	1888280000			
CC-H 15/60	25	1878910000			

Technical drawing / application

ClipCard MultiCard

	CC 30/60	60 mm	CC 30/60 04MM	60 mm

Technical data

Material	Polyamide 66	Polyamide 66
Fire class acc. to UL 94	V-2	V-2
Ambient temperature (operational)	Self adhesive: -40...60 °C; Standard: -40...100 °C	Standard: -40...100 °C
Application/manufacturer		With hole
Width	60 mm	60 mm
Length	30 mm	30 mm

Ordering data

MultiCard Blank		Type	Qty.	Order No.	Type	Qty.	Order No.
Yellow	●	CC 30/60 MC NE GE	30	1009320000	CC 30/60 04MM MC NE GE	30	1083160000
Grey	●	CC 30/60 MC NE GR	30	1072670000	CC 30/60 04MM MC NE GR	30	1083170000
Silver	●	CC 30/60 MC NE SI	30	1934400000			
White	○	CC 30/60 MC NE WS	30	1934420000	CC 30/60 04MM MC NE WS	30	1083150000
Blue	●				CC 30/60 04MM MC NE BL	30	1158840000
Green	●				CC 30/60 04MM MC NE GN	30	1158820000
Red	●				CC 30/60 04MM MC NE RT	30	1158830000
MultiCard custom printing							
To customer specification		CC 30/60 MC SDR	6	1934410000	CC 30/60 04MM MC SDR	6	1083190000
MultiCard Blank, self adhesive							
Yellow	●	CC 30/60 K MC NE GE	30	1078320000			
Grey	●	CC 30/60 K MC NE GR	30	1072680000			
Red	●	CC 30/60 K MC NE RT	30	1085430000			
Silver	●	CC 30/60 K MC NE SI	30	1934330000			
White	○	CC 30/60 K MC NE WS	30	1934390000			
MultiCard Blank, self adhesive, custom printing							
To customer specification		CC 30/60 K MC SDR	6	1934370000			

Accessories

Type	Qty.	Order No.	Type	Qty.	Order No.
ETO CC 30/60 TRANSPAR.	10	1934440000			
STR CC 30/60 TRANSPARENT	10	1934450000			
CC-H 30/60	10	1934430000			

Technical drawing / application

ClipCard MultiCard

	CC 85/27	27 mm	CC 85/54	54 mm

Technical data

	CC 85/27	CC 85/54
Material	Polyamide 66	Polyamide 66
Fire class acc. to UL 94	V-2	V-2
Ambient temperature (operational)	Self adhesive: -40...60 °C; Standard: -40...100 °C	Self adhesive: -40...60 °C; Standard: -40...100 °C
Application/manufacturer		
Width	27 mm	54 mm
Length	85 mm	85 mm

Ordering data

MultiCard Blank		Type	Qty.	Order No.	Type	Qty.	Order No.
Yellow	●	CC 85/27 MC NE GE	20	1520940000	CC 85/54 MC NE GE	10	1138410000
Grey	●	CC 85/27 MC NE GR	20	1520970000	CC 85/54 MC NE GR	10	1138420000
Silver	●						
White	○	CC 85/27 MC NE WS	20	1520930000	CC 85/54 MC NE WS	10	1138400000
Blue	●						
Green	●						
Red	●						
MultiCard custom printing							
To customer specification		CC 85/27 MC SDR	20	1525850000	CC 85/54 MC SDR	2	1138460000
MultiCard Blank, self adhesive							
Yellow	●	CC 85/27 K MC NE GE	20	1526120000	CC 85/54 K MC NE GE	10	1138440000
Grey	●	CC 85/27 K MC NE GR	20	1526130000	CC 85/54 K MC NE GR	10	1138450000
Red	●				CC 85/54 K MC NE RT	10	1288390000
Silver	●	CC 85/27 K MC NE SI	20	2123070000			
White	○	CC 85/27 K MC NE WS	20	1526100000	CC 85/54 K MC NE WS	10	1138430000
MultiCard Blank, self adhesive, custom printing							
To customer specification		CC 85/27 K MC SDR	20	1526140000	CC 85/54 K MC SDR	2	1138470000

Accessories

Type	Qty.	Order No.	Type	Qty.	Order No.
LOGIMARKHALTER 1/2 GRAU	40	1675130002	LOGIM.-KH. ES DUNKELBEIGE	20	1631640003
LOGIMARKHALTER 1/2 SW	40	1675130001	LOGIM.-KH. ES GRAU	20	1631640002
			LOGIM.-KH. ES SCHWARZ	20	1631640001
			LOGIMARK-KARTENHALTER	20	1603290000

Technical drawing / application

ClipCard MultiCard

	CC 85/54 04MM	54 mm	CC DIA 30/3.5	30 mm

Technical data

Material	Polyamide 66	Polyamide 66
Fire class acc. to UL 94	V-2	V-2
Ambient temperature (operational)	Standard: -40...100 °C	Standard: -40...100 °C
Application/manufacturer	With hole	With hole
Width	54 mm	30 mm
Length	85 mm	30 mm

Ordering data

MultiCard Blank		Type	Qty.	Order No.	Type	Qty.	Order No.
Yellow		CC 85/54 04MM MC NE GE	10	1248490000	CC DIA 30/3.5 MC NE GE	60	1266130000
Grey		CC 85/54 04MM MC NE GR	10	1248510000	CC DIA 30/3.5 MC NE GR	60	1266140000
Silver							
White		CC 85/54 04MM MC NE WS	10	1248480000	CC DIA 30/3.5 MC NE WS	60	1266120000
Blue							
Green							
Red					CC DIA 30/3.5 MC NE RT	60	1434110000
MultiCard custom printing							
To customer specification		CC 85/54 04MM MC SDR	2	1248460000	CC DIA 30/3.5 SDR	12	1266150000
MultiCard Blank, self adhesive							
Yellow							
Grey							
Red							
Silver							
White							
MultiCard Blank, self adhesive, custom printing							
To customer specification							

Technical drawing / application

ClipCard MultiCard

	CC DIA 30/4.2	30 mm	CC DIA 30 K	30 mm

Technical data

Material	Polyamide 66	Polyamide 66
Fire class acc. to UL 94	V-2	V-2
Ambient temperature (operational)	Standard: -40...100 °C	Self adhesive: -40...60 °C
Application/manufacturer	With hole	Self-adhesive, Ø 30 mm
Width	30 mm	30 mm
Length	30 mm	30 mm

Ordering data

MultiCard Blank	Type	Qty.	Order No.	Type	Qty.	Order No.
Yellow						
Grey	CC DIA 30/4.2 MC NE GE	60	1248530000			
Silver	CC DIA 30/4.2 MC NE GR	60	1248540000			
White						
Blue	CC DIA 30/4.2 MC NE WS	60	1248520000			
Green						
Red						
MultiCard custom printing						
To customer specification	CC DIA 30/4.2 MC SDR	12	1248470000			
MultiCard Blank, self adhesive						
Yellow						
Grey				CC DIA 30 K MC NE GE	60	2047390000
Red				CC DIA 30 K MC NE GR	60	2047400000
Silver						
White				CC DIA 30 K MC NE WS	60	2047380000
MultiCard Blank, self adhesive, custom printing						
To customer specification				CC DIA 30 K MC SDR	12	2047560000

Technical drawing / application

Tag rails
Boundless freedom of design

High-contrast identification for side-by-side devices

The SCHS shielding rail can be fitted to almost any device, either glued or screwed. It is the preferred choice for high contrast labelling, especially for devices placed side by side. Some types of sturdy PVC rails have markers that can be clicked and locked into position. You therefore benefit from the large variety and the compatibility of the tag rails from our MultiCard product line. Take advantage of our innovative labelling systems, which is an alternative to engraving.

The SCHS shielding rail can be fitted to almost any device, either glued or screwed, which makes it usable almost anywhere.

Tag rails – the benefits to you

- Additional information to the equipment is easy to correlate
- Depending upon the application, the length can be increased because of the metre lengths that are delivered

With the normal width size of 17.5 mm, as is the case with circuit breakers, the tag rail SchS2 is recommended along with the device marker ESG 8/17S.

Technical data

Material	Hard PVC
Flammability classification to UL 94	VO
Temp., min.	-20 °C
Temp., max.	80 °C

Tag rails

	CC-Rail 1000	17 mm	SCHS 1	17 mm

Technical data

	CC-Rail 1000	SCHS 1
Material	PVC	PVC
Fire class acc. to UL 94	V-0	V-0
Ambient temperature (operational)	-20 °C...80 °C	-20 °C...80 °C
Application/manufacturer		
Width	17 mm	17 mm
Length	1000 mm	1000 mm

Ordering data

		CC-Rail 1000			SCHS 1		
		Type	Qty.	Order No.	Type	Qty.	Order No.
Black	●	CC-RAIL 1000	1	1790150000	SCHS1	1	0138900000
Grey	●						

Accessories

	CC-Rail 1000			SCHS 1		
	Type	Qty.	Order No.	Type	Qty.	Order No.
	CC 15/17 MC NE WS	80	1876570000	STR F.SCHS	1	0139200000
	CC 15/27 MC NE WS	80	1876770000	ESO/SCHS1 500X12,5X0,3	100	0139000000
	CC 15/49 MC NE WS	40	1877260000			
	CC 15/60 MC NE WS	40	1877350000			
Cover						
	CC-RAIL TRANSPARENT1000	1	1790160000			
MultiCard						

Technical drawing / application

Tag rails – identification for side-by-side devices

Tag rails

	SCHS 2	SCHS 3 + SCHS 4
	8 mm	10 mm

Technical data

Material	PVC	PVC
Fire class acc. to UL 94	V-0	V-0
Ambient temperature (operational)	-20 °C...80 °C	-20 °C...80 °C
Application/manufacturer	self-adhesive	self-adhesive
Width	8 mm	10 mm
Length	1000 mm	1000 mm

Ordering data

		Type	Qty.	Order No.	Type	Qty.	Order No.
Black	●	SCHS2	1	0337400000	SCHS3 K	1	1753480000
Grey	●				SCHS4 K	1	1753460000

Accessories

	Type	Qty.	Order No.	Type	Qty.	Order No.
	WS 8/5 MC NE WS	720	1640740000			
	ESG 8/17 SYS PRO M WS	200	1755340000			
Cover						
MultiCard	DEK 5/5 MC NE WS	1000	1609801044	ESG 7/20 SIRIUS MC NE GE	200	1736181687

Technical drawing / application

Individual processing

The professional system for every standard

PrintJet ADVANCED

Superior components in a comprehensive product line

Our labelling system allows you to label with precision and speed – without losing track.
Our completely matched line of materials, sizes and mounting options cover solutions for all of your particular operational needs.
The systematic use of PrintJet ADVANCED and the M-Print®-PRO-software enables you to custom design and process facility labelling for all of your system components.
The result is a consistently outstanding marking system.

PrintJet ADVANCED enables you to print MetalliCards as standard. We offer PrintJet PRO users an update kit that allows you to process MetalliCards.

The benefits for you

- Quality: durable materials for extreme conditions
- Customised: perfectly matched system components provide the best variety
- Efficient: tailor-made solutions from a single source
- Professional: in-house control of all marking processes

Precise colour printing across multiple tags of the same type – thanks to an inlay-secured printing process.

The universal inlay is designed to accept eight different tag types and is particularly suitable for printing small batch jobs.

Technical specifications

Tag material	Micro etching steel 1.4301 (ST) or chromal coated aluminium (AL)
Temperature range	–55 °C to +130 °C
Thickness	0.5 mm
Primer	100 impregnated cloths and hermetically sealed
Update kit	PrintJet ADVANCED enables you to print metal markers as standard. We offer an update kit for customers who also want to print metal markers with their PrintJet PRO. The PrintJet PRO's firmware ensures that MetalliCards are processed properly. Available for PrintJet PROs, from delivery date July 2010, with serial number 3653 (last 4 digits) and higher.

MetalliCard

	CC-M 27/18	18 mm	CC-M 27/18 2X3	18 mm

Technical data

	CC-M 27/18	CC-M 27/18 2X3
Ambient temperature (operational)	-55 °C...130 °C	-55 °C...130 °C
Width	18 mm	18 mm
Length	26.8 mm	26.8 mm
Drill-hole diameter		3.30 mm
Diameter		

Ordering data

MetalliCard Blank	Type	Qty.	Order No.	Type	Qty.	Order No.
Micro-etched stainless steel 1.4301 (ST)	CC-M 27/18 ST	200	1327640000	CC-M 27/18 2X3 ST	200	1463880000
Chromal coated aluminium (AL)	CC-M 27/18 AL	200	1327630000	CC-M 27/18 2X3 AL	200	1463870000
MetalliCard custom printing						
Micro-etched stainless steel 1.4301 (ST)	CC-M 27/18 ST SDR	1	1474120000	CC-M 27/18 2X3 ST SDR	1	1474140000
Chromal coated aluminium (AL)	CC-M 27/18 AL SDR	1	1474110000	CC-M 27/18 2X3 AL SDR	1	1474130000

Accessories

	Type	Qty.	Order No.	Type	Qty.	Order No.
Primer for pretreatment	PRIMER CC-M	100	2068020000	PRIMER CC-M	100	2068020000
Adhesive label	DKB CC 27/18	320	1341140000			
Inlay	INLAY CC-M 27/18	1	1341040000	INLAY CC-M 27/18	1	1341040000
Inlay	INLAY CC-M UNIVERSAL	1	1341120000	INLAY CC-M UNIVERSAL	1	1341120000

Technical drawing / application

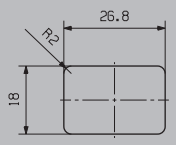

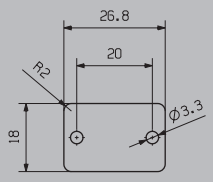

MetalliCard - individual processing

MetalliCard

	CC-M 85/27	27 mm	CC-M 85/27 2X3	27 mm

Technical data

Ambient temperature (operational)	-55 °C...130 °C	-55 °C...130 °C
Width	27 mm	27 mm
Length	85.6 mm	85.6 mm
Drill-hole diameter		3.30 mm
Diameter		

Ordering data

MetalliCard Blank	Type	Qty.	Order No.	Type	Qty.	Order No.
Micro-etched stainless steel 1.4301 (ST)	CC-M 85/27 ST	80	1327670000	CC-M 85/27 2X3 ST	80	1327840000
Chromal coated aluminium (AL)	CC-M 85/27 AL	80	1327650000	CC-M 85/27 2X3 AL	80	1327830000
MetalliCard custom printing						
Micro-etched stainless steel 1.4301 (ST)	CC-M 85/27 ST SDR	1	1474160000	CC-M 85/27 2X3 ST SDR	1	1474180000
Chromal coated aluminium (AL)	CC-M 85/27 AL SDR	1	1474150000	CC-M 85/27 2X3 AL SDR	1	1474170000

Accessories

	Type	Qty.	Order No.	Type	Qty.	Order No.
Primer for pretreatment	PRIMER CC-M	100	2068020000	PRIMER CC-M	100	2068020000
Adhesive label	DKB CC 85/27	100	1226620000			
Inlay	INLAY CC-M 85/27	1	1341050000	INLAY CC-M 85/27	1	1341050000
Inlay	INLAY CC-M UNIVERSAL	1	1341120000	INLAY CC-M UNIVERSAL	1	1341120000

Technical drawing / application

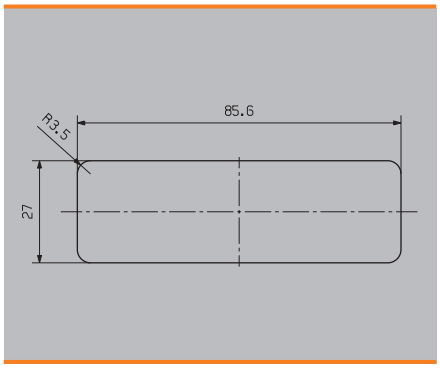

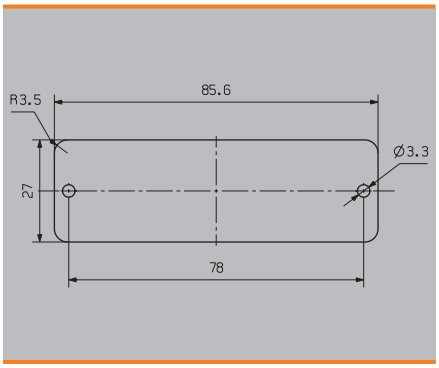

MetalliCard

	CC-M 10/30 2X2.5	30 mm	CC-M 58/35	34.8 mm

Technical data

Ambient temperature (operational)	-55 °C...130 °C	-55 °C...130 °C
Width	30 mm	34.8 mm
Length	10 mm	58 mm
Drill-hole diameter	2.50 mm	
Diameter		

Ordering data

MetalliCard Blank	Type	Qty.	Order No.	Type	Qty.	Order No.
Micro-etched stainless steel 1.4301 (ST)	CC-M 10/30 2X2.5 ST	200	1500150000	CC-M 58/35 ST	100	1415730000
Chromal coated aluminium (AL)	CC-M 10/30 2X2.5 AL	200	1483780000	CC-M 58/35 AL	100	1415750000
MetalliCard custom printing						
Micro-etched stainless steel 1.4301 (ST)	CC-M 10/30 2X2.5 ST SDR	1	1505150000	CC-M 58/35 ST SDR	1	1474340000
Chromal coated aluminium (AL)	CC-M 10/30 2X2.5 AL SDR	1	1505140000	CC-M 58/35 AL SDR	1	1474330000

Accessories

	Type	Qty.	Order No.	Type	Qty.	Order No.
Primer for pretreatment	PRIMER CC-M	100	2068020000	PRIMER CC-M	100	2068020000
Adhesive label						
Inlay	INLAY CC-M 10/30	1	1483770000	INLAY CC-M 58/35	1	1415950000
Inlay						

Technical drawing / application

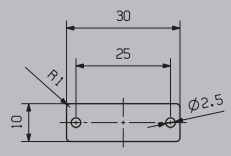

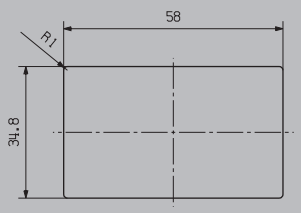

MetalliCard - individual processing

MetalliCard

	CC-M 58/35 2X3	34.8 mm	CC-M 15/45	45 mm

Technical data

	CC-M 58/35 2X3	CC-M 15/45
Ambient temperature (operational)	-55 °C...130 °C	-55 °C...130 °C
Width	34.8 mm	45 mm
Length	58 mm	15 mm
Drill-hole diameter	3.40 mm	
Diameter		

Ordering data

MetalliCard Blank	Type	Qty.	Order No.	Type	Qty.	Order No.
Micro-etched stainless steel 1.4301 (ST)	CC-M 58/35 2X3 ST	100	1415670000	CC-M 15/45 ST	200	1327740000
Chromal coated aluminium (AL)	CC-M 58/35 2X3 AL	100	1415710000	CC-M 15/45 AL	200	1327730000
MetalliCard custom printing						
Micro-etched stainless steel 1.4301 (ST)	CC-M 58/35 2X3 ST SDR	1	1474360000	CC-M 15/45 ST SDR	1	1474290000
Chromal coated aluminium (AL)	CC-M 58/35 2X3 AL SDR	1	1474350000	CC-M 15/45 AL SDR	1	1474280000

Accessories

	Type	Qty.	Order No.	Type	Qty.	Order No.
Primer for pretreatment	PRIMER CC-M	100	2068020000	PRIMER CC-M	100	2068020000
Adhesive label				DKB CC 15/45	240	1341170000
Inlay	INLAY CC-M 58/35	1	1415950000	INLAY CC-M 15/45	1	1341090000
Inlay				INLAY CC-M UNIVERSAL	1	1341120000

Technical drawing / application

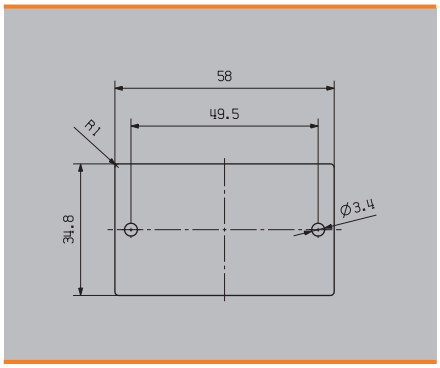

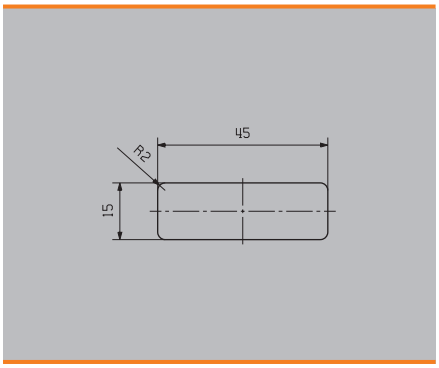

MetalliCard

	CC-M 15/45 2X3	45 mm	CC-M 70/48	48 mm

Technical data

	CC-M 15/45 2X3	CC-M 70/48
Ambient temperature (operational)	-55 °C...130 °C	-55 °C...130 °C
Width	45 mm	48 mm
Length	15 mm	70 mm
Drill-hole diameter	3.30 mm	
Diameter		

Ordering data

MetalliCard Blank	Type	Qty.	Order No.	Type	Qty.	Order No.
Micro-etched stainless steel 1.4301 (ST)	CC-M 15/45 2X3 ST	200	1327920000	CC-M 70/48 ST	40	1415740000
Chromal coated aluminium (AL)	CC-M 15/45 2X3 AL	200	1327900000	CC-M 70/48 AL	40	1415770000
MetalliCard custom printing						
Micro-etched stainless steel 1.4301 (ST)	CC-M 15/45 2X3 ST SDR	1	1474320000	CC-M 70/48 ST SDR	1	1474380000
Chromal coated aluminium (AL)	CC-M 15/45 2X3 AL SDR	1	1474310000	CC-M 70/48 AL SDR	1	1474370000

Accessories

	Type	Qty.	Order No.	Type	Qty.	Order No.
Primer for pretreatment	PRIMER CC-M	100	2068020000	PRIMER CC-M	100	2068020000
Adhesive label						
Inlay	INLAY CC-M 15/45	1	1341090000	INLAY CC-M 70/48	1	1415940000
Inlay	INLAY CC-M UNIVERSAL	1	1341120000			

Technical drawing / application

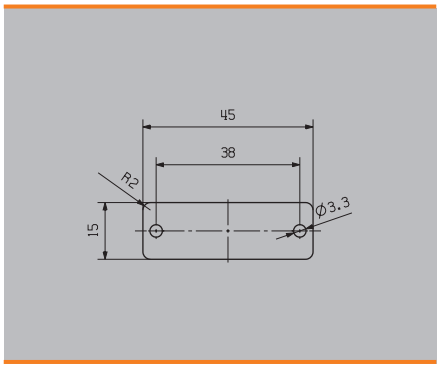

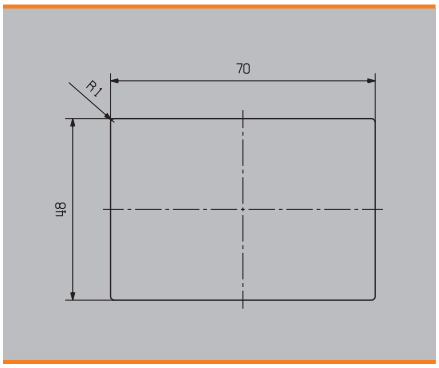

MetalliCard - individual processing

MetalliCard

	CC-M 70/48 2X3	48 mm	CC-M 18/52 2X3	52 mm

Technical data

	CC-M 70/48 2X3	CC-M 18/52 2X3
Ambient temperature (operational)	-55 °C...130 °C	-55 °C...130 °C
Width	48 mm	52 mm
Length	70 mm	18 mm
Drill-hole diameter	3.30 mm	3.30 mm
Diameter		

Ordering data

MetalliCard Blank	Type	Qty.	Order No.	Type	Qty.	Order No.
Micro-etched stainless steel 1.4301 (ST)	CC-M 70/48 2X3 ST	40	1415680000	CC-M 18/52 2X3 ST	200	1505350000
Chromal coated aluminium (AL)	CC-M 70/48 2X3 AL	40	1415720000	CC-M 18/52 2X3 AL	200	1390400000
MetalliCard custom printing						
Micro-etched stainless steel 1.4301 (ST)	CC-M 70/48 2X3 ST SDR	1	1474400000	CC-M 18/52 2X3 ST SDR	1	1505370000
Chromal coated aluminium (AL)	CC-M 70/48 2X3 AL SDR	1	1474390000	CC-M 18/52 2X3 AL SDR	1	1505360000

Accessories

	Type	Qty.	Order No.	Type	Qty.	Order No.
Primer for pretreatment	PRIMER CC-M	100	2068020000	PRIMER CC-M	100	2068020000
Adhesive label						
Inlay	INLAY CC-M 70/48	1	1415940000	INLAY CC-M 18/52	1	1390430000
Inlay						

Technical drawing / application

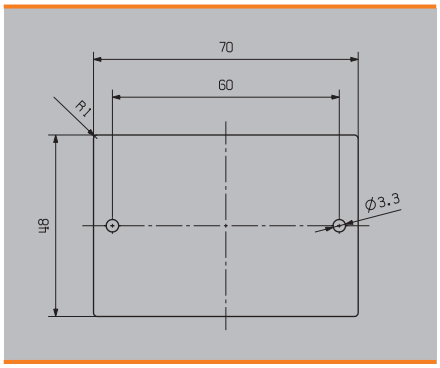

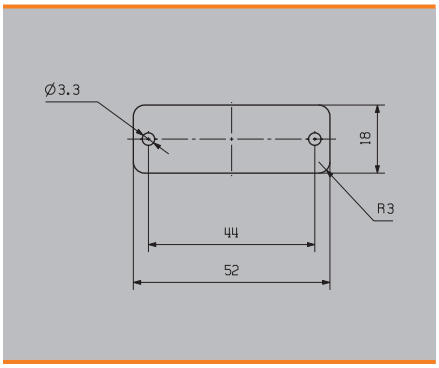

MetalliCard

	CC-M 85/54	54 mm	CC-M 85/54 4X3	54 mm

Technical data

Ambient temperature (operational)	-55 °C...130 °C	-55 °C...130 °C
Width	54 mm	54 mm
Length	85.6 mm	85.6 mm
Drill-hole diameter		3.30 mm
Diameter		

Ordering data

MetalliCard Blank	Type	Qty.	Order No.	Type	Qty.	Order No.
Micro-etched stainless steel 1.4301 (ST)	CC-M 85/54 ST	40	1327620000	CC-M 85/54 4X3 ST	40	1327820000
Chromal coated aluminium (AL)	CC-M 85/54 AL	40	1327600000	CC-M 85/54 4X3 AL	40	1327800000
MetalliCard custom printing						
Micro-etched stainless steel 1.4301 (ST)	CC-M 85/54 ST SDR	1	1474060000	CC-M 85/54 4X3 ST SDR	1	1474090000
Chromal coated aluminium (AL)	CC-M 85/54 AL SDR	1	1474070000	CC-M 85/54 4X3 AL SDR	1	1474080000

Accessories

	Type	Qty.	Order No.	Type	Qty.	Order No.
Primer for pretreatment	PRIMER CC-M	100	2068020000	PRIMER CC-M	100	2068020000
Adhesive label	DKB CC 85/54	100	1175850000			
Inlay	INLAY CC-M 85/54	1	1341030000	INLAY CC-M 85/54	1	1341030000
Inlay	INLAY CC-M UNIVERSAL	1	1341120000	INLAY CC-M UNIVERSAL	1	1341120000

Technical drawing / application

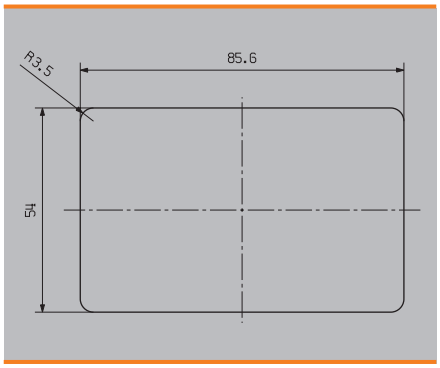

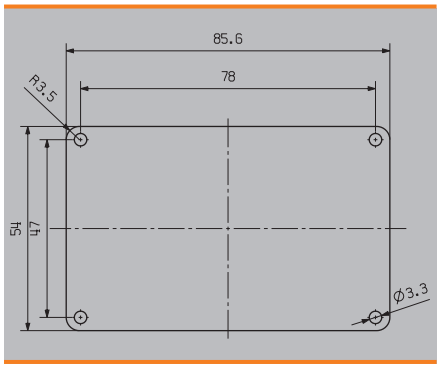

MetalliCard - individual processing

MetalliCard

	CC-M 15/60	60 mm	CC-M 15/60 2X3	60 mm

Technical data

Ambient temperature (operational)	-55 °C...130 °C	-55 °C...130 °C
Width	60 mm	60 mm
Length	15 mm	15 mm
Drill-hole diameter		3.30 mm
Diameter		

Ordering data

MetalliCard Blank	Type	Qty.	Order No.	Type	Qty.	Order No.
Micro-etched stainless steel 1.4301 (ST)	CC-M 15/60 ST	200	1327720000	CC-M 15/60 2X3 ST	200	1327890000
Chromal coated aluminium (AL)	CC-M 15/60 AL	200	1327700000	CC-M 15/60 2X3 AL	200	1327880000
MetalliCard custom printing						
Micro-etched stainless steel 1.4301 (ST)	CC-M 15/60 ST SDR	1	1474250000	CC-M 15/60 2X3 ST SDR	1	1474270000
Chromal coated aluminium (AL)	CC-M 15/60 AL SDR	1	1474240000	CC-M 15/60 2X3 AL SDR	1	1474260000

Accessories

	Type	Qty.	Order No.	Type	Qty.	Order No.
Primer for pretreatment	PRIMER CC-M	100	2068020000	PRIMER CC-M	100	2068020000
Adhesive label	DKB CC 15/60	160	1341150000			
Inlay	INLAY CC-M 15/60	1	1341080000	INLAY CC-M 15/60	1	1341080000
Inlay	INLAY CC-M UNIVERSAL	1	1341120000	INLAY CC-M UNIVERSAL	1	1341120000

Technical drawing / application

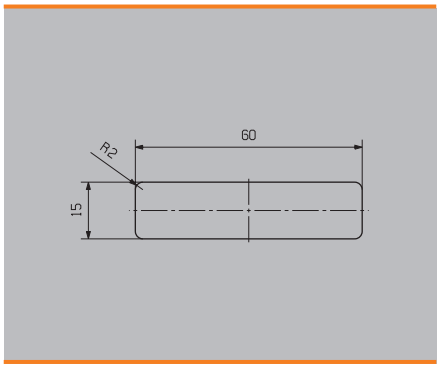

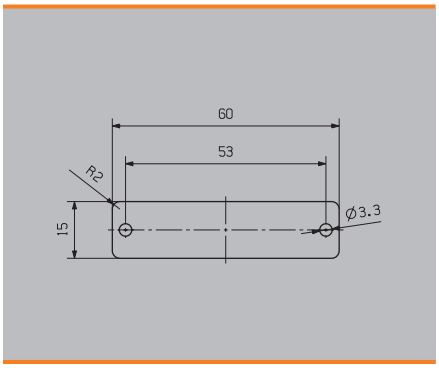

MetalliCard

	CC-M 30/60	60 mm	CC-M 30/60 2X3	60 mm

Technical data

Ambient temperature (operational)	-55 °C...130 °C	-55 °C...130 °C
Width	60 mm	60 mm
Length	30 mm	30 mm
Drill-hole diameter		3.30 mm
Diameter		

Ordering data

MetalliCard Blank	Type	Qty.	Order No.	Type	Qty.	Order No.
Micro-etched stainless steel 1.4301 (ST)	CC-M 30/60 ST	100	1327690000	CC-M 30/60 2X3 ST	100	1327870000
Chromal coated aluminium (AL)	CC-M 30/60 AL	100	1327680000	CC-M 30/60 2X3 AL	100	1327850000
MetalliCard custom printing						
Micro-etched stainless steel 1.4301 (ST)	CC-M 30/60 ST SDR	1	1474210000	CC-M 30/60 2X3 ST SDR	1	1474230000
Chromal coated aluminium (AL)	CC-M 30/60 AL SDR	1	1474190000	CC-M 30/60 2X3 AL SDR	1	1474220000

Accessories

	Type	Qty.	Order No.	Type	Qty.	Order No.
Primer for pretreatment	PRIMER CC-M	100	2068020000	PRIMER CC-M	100	2068020000
Adhesive label	DKB CC 30/60	100	1341130000			
Inlay	INLAY CC-M 30/60	1	1341070000	INLAY CC-M 30/60	1	1341070000
Inlay	INLAY CC-M UNIVERSAL	1	1341120000	INLAY CC-M UNIVERSAL	1	1341120000

Technical drawing / application

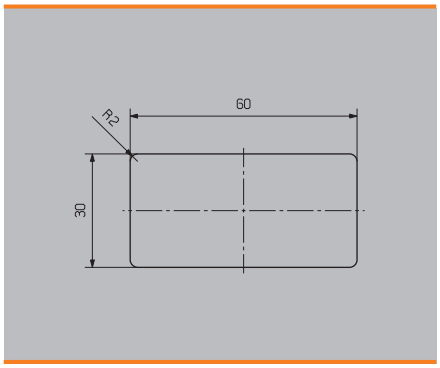

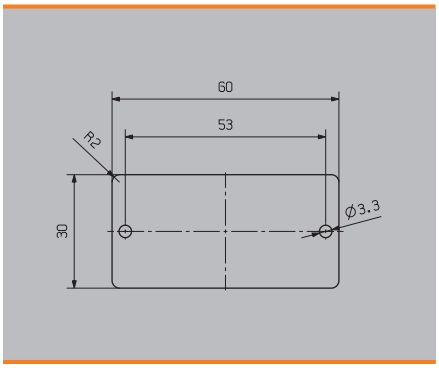

MetalliCard - individual processing

MetalliCard

	CC-M 27/70 2X3	70 mm	CC-M 43/70	70 mm

Technical data

Ambient temperature (operational)	-55 °C...130 °C	-55 °C...130 °C
Width	70 mm	70 mm
Length	27 mm	43 mm
Drill-hole diameter	3.00 mm	
Diameter		

Ordering data

MetalliCard Blank	Type	Qty.	Order No.	Type	Qty.	Order No.
Micro-etched stainless steel 1.4301 (ST)	CC-M 27/70 2X3 ST	80	1500190000	CC-M 43/70 ST	80	1500220000
Chromal coated aluminium (AL)	CC-M 27/70 2X3 AL	80	1500170000	CC-M 43/70 AL	80	1500200000
MetalliCard custom printing						
Micro-etched stainless steel 1.4301 (ST)	CC-M 27/70 2X3 ST SDR	1	1505170000	CC-M 43/70 ST SDR	1	1505190000
Chromal coated aluminium (AL)	CC-M 27/70 2X3 AL SDR	1	1505160000	CC-M 43/70 AL SDR	1	1505180000

Accessories

	Type	Qty.	Order No.	Type	Qty.	Order No.
Primer for pretreatment	PRIMER CC-M	100	2068020000	PRIMER CC-M	100	2068020000
Adhesive label				DKB CC 43/70	100	1500340000
Inlay	INLAY CC-M 27/70	1	1500290000	INLAY CC-M 43/70	1	1500300000
Inlay						

Technical drawing / application

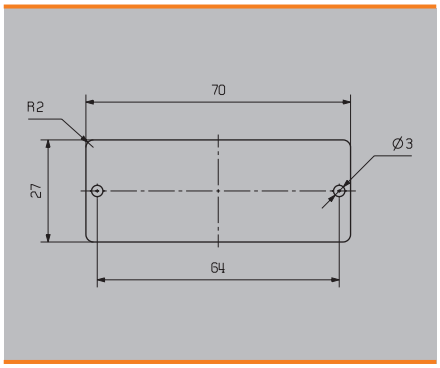

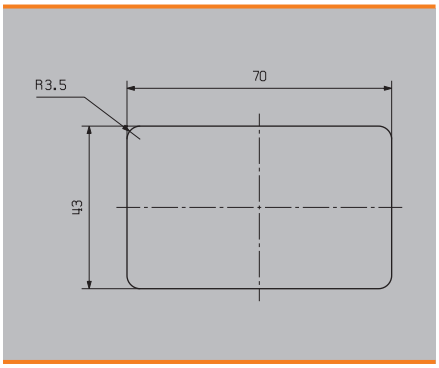

MetalliCard

CC-M DIA 30

Technical data

Ambient temperature (operational)	-55 °C...130 °C
Width	
Length	
Drill-hole diameter	4.20 mm
Diameter	30 mm

Ordering data

MetalliCard Blank	Type	Qty.	Order No.
Micro-etched stainless steel 1.4301 (ST)	CC-M DIA 30 ST	200	1327770000
Chromal coated aluminium (AL)	CC-M DIA 30 AL	200	1327750000
MetalliCard custom printing			
Micro-etched stainless steel 1.4301 (ST)	CC-M DIA 30 ST SDR	1	1474420000
Chromal coated aluminium (AL)	CC-M DIA 30 AL SDR	1	1474410000

Accessories

	Type	Qty.	Order No.
Primer for pretreatment	PRIMER CC-M	100	2068020000
Adhesive label	DKB CC DIA 30	200	1341180000
Inlay	INLAY CC-M DIA 30	1	1341100000
Inlay	INLAY CC-M UNIVERSAL	1	1341120000

Technical drawing / application

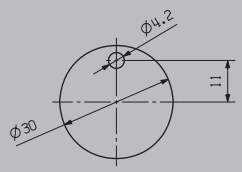

Labels
The right format for all equipment

High quality versions of resistant device markers

Our powerful self-adhesive labels for equipment identification and the use of different materials for your application means that superior standards of labelling are achieved. It doesn't matter which system you are labelling; in our portfolio you will always find what you want in the application-indexed colour and of the most suitable and appropriate quality.

MultiMark – the benefits to you

- Double laminated polyester
- Can be used with the equipment of many manufacturers
- Device markers with a familiar design

THM Labels – the benefits to you

- Delivered on rolls, also in small amounts for thermal transfer printers
- Alternative delivery as an A4 sheet

Technical data ESG, SM, CC, EL

Material	Double laminated Polyester
Material thickness	0.1 mm
Back side	Aluminized in all colors
Adhesive	Extremely strong acrylic adhesive
Initial adhesion	950 gr./cm²

Technical data THM MT 30X and THM EL

Material	Polyester or Vinly
Material thickness	0.05 mm
Back side	Aluminized only for silver
Adhesive	Strong acrylic adhesive
Initial adhesion	540 gr./cm²

ESG MM
The multi-coloured and formatted labels have a strong adhesive layer to ensure the best possible adhesion to the underlying surface.

SM MM
In various areas of application they guarantee the clear assignment of all components, such as control and signaling devices from different vendors.

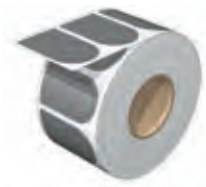

EL MM
The endless variations of MultiMark markers make them an economical alternative to conventional tag rails or special labels.

CC MM
Our systematically coordinated product range includes labels for identifying standard components, as well as all purpose and familiar formats.

THM MT 30X
The THM labels offer brilliant printing quality thanks to the thermal transfer technology and optimises all identification requirements.

THM ET S7
THM ET S7 are non-adhesive labels on rolls for marking the Siemens Simatic 200SP, S7-1500, S7-300 and S7-400 modules.

THM GEW
Textile labels are made of very flexible cotton fabric. The high adhesion values enable flexible application especially on rough surfaces.

THM EL
THM EL are self-adhesive endless labels for marking cable ducts and distribution boxes.

KSW
KSW marker strips are used for labelling multipole plug-in connectors. They can be printed individually by the user for any contact spacing.

Device markers ESG

Technical data

Material	Temperature range	Fire class acc. to UL 94	Adhesive	Order No.	Type
Polyester	-40...120 °C	V-0	Acrylate adhesive	2005080000	RIBBON MM 80/360 SW
				2005040000	RIBBON MM 80/300 WS

Ordering data

Order No.	Type	Colour	Length	Width	Qty.
2005110000	ESG 6/17 MM GE	Yellow	17 mm	6 mm	3000
2005120000	ESG 6/17 MM GR	Grey	17 mm	6 mm	3000
2005130000	ESG 6/17 MM SW	Black	17 mm	6 mm	3000
2005100000	ESG 6/17 MM WS	White	17 mm	6 mm	3000
2005150000	ESG 8/20 MM GE	Yellow	20 mm	8 mm	3000
2005160000	ESG 8/20 MM GR	Grey	20 mm	8 mm	3000
2005170000	ESG 8/20 MM SW	Black	20 mm	8 mm	3000
2005140000	ESG 8/20 MM WS	White	20 mm	8 mm	3000
2005210000	ESG 9/17 MM GE	Yellow	17 mm	9 mm	3000
2005230000	ESG 9/17 MM GR	Grey	17 mm	9 mm	3000
2005250000	ESG 9/17 MM SW	Black	17 mm	9 mm	3000
2005190000	ESG 9/17 MM WS	White	17 mm	9 mm	3000

Device markers SM

Technical data

Material	Temperature range	Fire class acc. to UL 94	Adhesive	Order No.	Type
Polyester	-40...120 °C	V-0	Acrylate adhesive	2005080000	RIBBON MM 80/360 SW
				2005040000	RIBBON MM 80/300 WS

Ordering data

Order No.	Type	Colour	Length	Width	Qty.
2006240000	SM 18/9.5 MM GE	Yellow	9 mm	18 mm	1000
2006260000	SM 18/9.5 MM GR	Grey	9 mm	18 mm	1000
2006200000	SM 18/9.5 MM SW	Black	9 mm	18 mm	1000
2006220000	SM 18/9.5 MM WS	White	9 mm	18 mm	1000
2006420000	SM 27/8 MM GE	Yellow	8 mm	27 mm	1000
2006490000	SM 27/8 MM GN	Green	8 mm	27 mm	1000
2006480000	SM 27/8 MM GR	Grey	8 mm	27 mm	1000
2006460000	SM 27/8 MM RT	Red	8 mm	27 mm	1000
2006440000	SM 27/8 MM SW	Black	8 mm	27 mm	1000
2006400000	SM 27/8 MM WS	White	8 mm	27 mm	1000
2006510000	SM 27/12.5 MM GE	Yellow	12.5 mm	27 mm	1000
2006550000	SM 27/12.5 MM GN	Green	12.5 mm	27 mm	1000
2006520000	SM 27/12.5 MM GR	Grey	12.5 mm	27 mm	1000
2006540000	SM 27/12.5 MM RT	Red	12.5 mm	27 mm	1000
2006530000	SM 27/12.5 MM SW	Black	12.5 mm	27 mm	1000
2006500000	SM 27/12.5 MM WS	White	12.5 mm	27 mm	1000
2006300000	SM 27/18 MM GE	Yellow	18 mm	27 mm	1000
2006380000	SM 27/18 MM GN	Green	18 mm	27 mm	1000
2006340000	SM 27/18 MM GR	Grey	18 mm	27 mm	1000
2006360000	SM 27/18 MM RT	Red	18 mm	27 mm	1000
2006320000	SM 27/18 MM SW	Black	18 mm	27 mm	1000
2006280000	SM 27/18 MM WS	White	18 mm	27 mm	1000

Device markers SM

Technical data

Material	Temperature range	Fire class acc. to UL 94	Adhesive	Order No.	Type
Polyester	-40...120 °C	V-0	Acrylate adhesive	2005080000	RIBBON MM 80/360 SW
				2005040000	RIBBON MM 80/300 WS

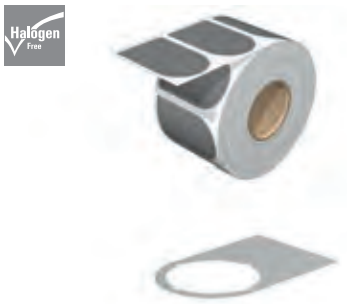

Ordering data

Order No.	Type		Colour	Length	Width	Qty.
2005810000	SM 27/18-22 MM GE	●	Yellow	53.75 mm	27 mm	1000
2005920000	SM 27/18-22 MM GN	●	Green	53.75 mm	27 mm	1000
2005860000	SM 27/18-22 MM GR	●	Grey	53.75 mm	27 mm	1000
2005900000	SM 27/18-22 MM RT	●	Red	53.75 mm	27 mm	1000
2005880000	SM 27/18-22 MM SW	●	Black	53.75 mm	27 mm	1000
2005840000	SM 27/18-22 MM WS	❍	White	53.75 mm	27 mm	1000
2006080000	SM 36/18-30 MM GE	●	Yellow	62 mm	36 mm	1000
2006180000	SM 36/18-30 MM GN	●	Green	62 mm	36 mm	1000
2006120000	SM 36/18-30 MM GR	●	Grey	62 mm	36 mm	1000
2006160000	SM 36/18-30 MM RT	●	Red	62 mm	36 mm	1000
2006140000	SM 36/18-30 MM SW	●	Black	62 mm	36 mm	1000
2006100000	SM 36/18-30 MM WS	❍	White	62 mm	36 mm	1000

Device markers SM

Technical data

Material	Temperature range	Fire class acc. to UL 94	Adhesive	Order No.	Type
Polyester	-40...120 °C	V-0	Acrylate adhesive	2005080000	RIBBON MM 80/360 SW

Ordering data

Order No.	Type		Colour	Diameter	Qty.
2006060000	SM DIA 60-22 MM GE	●	Yellow	60 mm	450

Device markers CC

Technical data

Material	Temperature range	Fire class acc. to UL 94	Adhesive	Order No.	Type
Polyester	-40...120 °C	V-0	Acrylate adhesive	2005080000	RIBBON MM 80/360 SW
				2005040000	RIBBON MM 80/300 WS

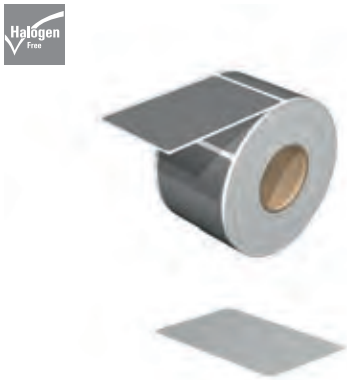

Ordering data

Order No.	Type		Colour	Length	Width	Qty.
2005630000	CC 15/27 MM GE	●	Yellow	27 mm	15 mm	450
2005660000	CC 15/27 MM GR	●	Grey	27 mm	15 mm	450
2005690000	CC 15/27 MM SW	●	Black	27 mm	15 mm	450
2005600000	CC 15/27 MM WS	❍	White	27 mm	15 mm	450
2005520000	CC 15/45 MM GE	●	Yellow	45 mm	15 mm	450
2005540000	CC 15/45 MM GR	●	Grey	45 mm	15 mm	450
2005570000	CC 15/45 MM SW	●	Black	45 mm	15 mm	450
2005500000	CC 15/45 MM WS	❍	White	45 mm	15 mm	450
2005430000	CC 15/60 MM GE	●	Yellow	60 mm	15 mm	450
2005460000	CC 15/60 MM GR	●	Grey	60 mm	15 mm	450
2005480000	CC 15/60 MM SW	●	Black	60 mm	15 mm	450
2005410000	CC 15/60 MM WS	❍	White	60 mm	15 mm	450
2005350000	CC 30/60 MM GE	●	Yellow	60 mm	30 mm	450
2005370000	CC 30/60 MM GR	●	Grey	60 mm	30 mm	450
2005390000	CC 30/60 MM SW	●	Black	60 mm	30 mm	450
2005330000	CC 30/60 MM WS	❍	White	60 mm	30 mm	450
2005280000	CC 85/54 MM GE	●	Yellow	54 mm	85 mm	450
2005290000	CC 85/54 MM GR	●	Grey	54 mm	85 mm	450
2005310000	CC 85/54 MM SW	●	Black	54 mm	85 mm	450
2005270000	CC 85/54 MM WS	❍	White	54 mm	85 mm	450

ELS inlay tags - non-adhesive labels

Technical data

Material	Temperature range	Fire class acc. to UL 94	Adhesive	Order No.	Type
Polyester	-40...150 °C	HB		2005080000	RIBBON MM 80/360 SW

Ordering data

Order No.	Type		Colour	Length	Width	Qty.
2010620000	ELS 6/30 MM GE	●	Yellow	30 mm	6 mm	3000
2009980000	ELS 6/30 MM WS	❍	White	30 mm	6 mm	3000
2005240000	ELS 8/20 MM GE	●	Yellow	20 mm	8 mm	3000
2005180000	ELS 8/20 MM WS	❍	White	20 mm	8 mm	3000
2005260000	ELS 16/40 MM GE	●	Yellow	40 mm	16 mm	2000
2005200000	ELS 16/40 MM WS	❍	White	40 mm	16 mm	2000

Device markers Endless

Technical data

Material	Temperature range	Fire class acc. to UL 94	Adhesive	Order No.	Type
Polyester	-40...120 °C	V-0	Acrylate adhesive	2005080000	RIBBON MM 80/360 SW
				2005070000	RIBBON MM 110/360 SW

Ordering data

Order No.	Type		Colour	Length	Width	Qty.
2006580000	EL 12 MM GE 30M	●	Yellow	30000 mm	12 mm	1
2006560000	EL 12 MM SI 30M	●	Silver	30000 mm	12 mm	1
2006570000	EL 12 MM WS 30M	❍	White	30000 mm	12 mm	1
2006600000	EL 15 MM GE 30M	●	Yellow	30000 mm	15 mm	1
2006610000	EL 15 MM SI 30M	●	Silver	30000 mm	15 mm	1
2006590000	EL 15 MM WS 30M	❍	White	30000 mm	15 mm	1
2006640000	EL 27 MM GE 30M	●	Yellow	30000 mm	27 mm	1
2006620000	EL 27 MM SI 30M	●	Silver	30000 mm	27 mm	1
2006630000	EL 27 MM WS 30M	❍	White	30000 mm	27 mm	1
2006670000	EL 38 MM GE 30M	●	Yellow	30000 mm	38 mm	1
2006650000	EL 38 MM SI 30M	●	Silver	30000 mm	38 mm	1
2006660000	EL 38 MM WS 30M	❍	White	30000 mm	38 mm	1
2006700000	EL 60 MM GE 30M	●	Yellow	30000 mm	60 mm	1
2006680000	EL 60 MM SI 30M	●	Silver	30000 mm	60 mm	1
2006690000	EL 60 MM WS 30M	❍	White	30000 mm	60 mm	1
2006730000	EL 100 MM GE 30M	●	Yellow	30000 mm	100 mm	1
2006710000	EL 100 MM SI 30M	●	Silver	30000 mm	100 mm	1
2006720000	EL 100 MM WS 30M	❍	White	30000 mm	100 mm	1

THM Endless

Technical data

Material	Temperature range	Fire class acc. to UL 94	Adhesive	Order No.	Type
Polyester	-40 °C...150 °C	V-0	Acrylate adhesive	2005070000	RIBBON MM 110/360 SW

Ordering data

Order No.	Type		Colour	Length	Width	Qty.
1419980000	THM EL 100 GE 30M	●	Yellow	30000 mm	100 mm	1
1517270000	THM EL 100 SI 30M	●	Silver	30000 mm	100 mm	1
1420010000	THM EL 100 WS 30M	❍	White	30000 mm	100 mm	1
1517190000	THM EL 30 GE 30M	●	Yellow	30000 mm	30 mm	1
1517200000	THM EL 30 SI 30M	●	Silver	30000 mm	30 mm	1
1517180000	THM EL 30 WS 30M	❍	White	30000 mm	30 mm	1
1517230000	THM EL 50 GE 30M	●	Yellow	30000 mm	30 mm	1
1517240000	THM EL 50 SI 30M	●	Silver	30000 mm	50 mm	1
1517220000	THM EL 50 WS 30M	❍	White	30000 mm	50 mm	1
1391400000	THM EL 60 SI 50M	●	Silver	50000 mm	60 mm	1

THM endless, VIN

Technical data

Material	Temperature range	Fire class acc. to UL 94	Adhesive	Order No.	Type
Vinyl film	-40 °C...80 °C	HB	Polyacrylate adhesive	2005070000	RIBBON MM 110/360 SW

Ordering data

Order No.	Type		Colour	Length	Width	Qty.
1463800000	THM EL VIN 12 GE 30M	●	Yellow	30000 mm	12 mm	1
1307670000	THM EL VIN 15 WS 2L 30M	❍	White	30000 mm	15 mm	1
1096170000	THM EL VIN 15 WS 5L 30M	❍	White	30000 mm	15 mm	1
1105550000	THM EL VIN 24 WS 3L 30M	❍	White	30000 mm	24 mm	1
1463810000	THM EL VIN 25 GE 30M	●	Yellow	30000 mm	25 mm	1
1105560000	THM EL VIN 38 WS 30M	❍	White	30000 mm	38 mm	1
1474640000	THM EL VIN 45 WS 30M	❍	White	30000 mm	45 mm	1
1463820000	THM EL VIN 50 GE 30M	●	Yellow	30000 mm	50 mm	1
1463830000	THM EL VIN 100 GE 30M	●	Yellow	30000 mm	100 mm	1

THM MT30X

Technical data

Material	Temperature range	Fire class acc. to UL 94	Adhesive	Order No.	Type
Polyester	-40 °C...150 °C	V-0	Acrylate	2005070000	RIBBON MM 110/360 SW

Ordering data

Order No.	Type		Colour	Length	Width	Qty.
1852520000	THM MT30X 16/7 GE	●	Yellow	16 mm	7 mm	12500
1391390000	THM MT30X 12/6 GE	●	Yellow	12 mm	6 mm	10000
1072690000	THM MT30X 15/4 GE	●	Yellow	15 mm	4 mm	10000
1753231687	THM MT30X 15/6 GE	●	Yellow	15 mm	6 mm	10000
1753230001	THM MT30X 15/6 SI	●	Silver	15 mm	6 mm	10000
1753231044	THM MT30X 15/6 WS	❍	White	15 mm	6 mm	10000
1058740000	THM MT30X 15/9 GE	●	Yellow	15 mm	9 mm	10000
1058750000	THM MT30X 15/9 WS	❍	White	15 mm	9 mm	10000
1027620000	THM MT30X 17/8 GE	●	Yellow	17 mm	8 mm	10000
1856650000	THM MT30X 17/9 GE	●	Yellow	17 mm	9 mm	10000
1356500000	THM MT30X 17/9 SI	●	Silver	17 mm	9 mm	10000
1968130000	THM MT30X 17/9 WS	❍	White	17 mm	9 mm	10000
1753271687	THM MT30X 18/6 GE	●	Yellow	18 mm	6 mm	10000
1753270001	THM MT30X 18/6 SI	●	Silver	18 mm	6 mm	10000
1753271044	THM MT30X 18/6 WS	❍	White	18 mm	6 mm	10000
1753251687	THM MT30X 18/9 GE	●	Yellow	18 mm	9 mm	10000
1753250001	THM MT30X 18/9 SI	●	Silver	18 mm	9 mm	10000
1753251044	THM MT30X 18/9 WS	❍	White	18 mm	9 mm	10000
1753241687	THM MT30X 20/8 GE	●	Yellow	20 mm	8 mm	10000
1753241044	THM MT30X 20/8 WS	❍	White	20 mm	8 mm	10000
1751751687	THM MT30X 25/12 GE	●	Yellow	25 mm	12 mm	10000
1751750001	THM MT30X 25/12 SI	●	Silver	25 mm	12 mm	10000
1751751044	THM MT30X 25/12 WS	❍	White	25 mm	12 mm	10000
1751761044	THM MT30X 26/10 WS	❍	White	26 mm	10 mm	10000
1753261687	THM MT30X 30/20 GE	●	Yellow	30 mm	20 mm	6000
1751811687	THM MT30X 45/23 GE	●	Yellow	45 mm	23 mm	2000
1751810001	THM MT30X 45/23 SI	●	Silver	45 mm	23 mm	2000
1751811044	THM MT30X 45/23 WS	❍	White	45 mm	23 mm	2000
1852540000	THM MT30X 57/27 SI	●	Silver	57 mm	27 mm	2000
1751831687	THM MT30X 65/35 GE	●	Yellow	65 mm	35 mm	1000
1751830001	THM MT30X 65/35 SI	●	Silver	65 mm	35 mm	1000
1751831044	THM MT30X 65/35 WS	❍	White	65 mm	35 mm	1000
1003410000	THM MT30X 89/60 SI	●	Silver	89 mm	60 mm	1000
1751821687	THM MT30X 101/48 GE	●	Yellow	101 mm	48 mm	500
1751820001	THM MT30X 101/48 SI	●	Silver	101 mm	48 mm	500
1751821044	THM MT30X 101/48 WS	❍	White	101 mm	48 mm	500
2455620000	THM MT30X 101/74 WS	❍	White	101 mm	74 mm	500
1061810000	THM MT30X 101/74 GE	●	Yellow	101 mm	74 mm	500
1762960001	THM MT30X 101/74 SI	●	Silver	101 mm	74 mm	500
1778170000	THM MT30x 101/150 SI/G	●	Silver	101 mm	150 mm	250

THM GEW fabric

Technical data

Material	Temperature range	Fire class acc. to UL 94	Adhesive	Order No.	Type
Cotton fabric	-29 °C...80 °C	V-0	Natural rubber adhesive	2005070000	RIBBON MM 110/360 SW

Ordering data

Order No.	Type		Colour	Length	Width	Qty.
1059790000	THM GEW 15/6 GE	●	Yellow	15 mm	6 mm	10000
1059780000	THM GEW 15/6 WS	❍	White	15 mm	6 mm	10000
1059810000	THM GEW 17/9 GE	●	Yellow	17 mm	9 mm	10000
1059800000	THM GEW 17/9 WS	❍	White	17 mm	9 mm	10000
1059830000	THM GEW 18/6 GE	●	Yellow	18 mm	6 mm	10000
1059820000	THM GEW 18/6 WS	❍	White	18 mm	6 mm	10000
1059850000	THM GEW 18/9 GE	●	Yellow	18 mm	9 mm	10000
1059840000	THM GEW 18/9 WS	❍	White	18 mm	9 mm	10000
1059880000	THM GEW 20/8 GE	●	Yellow	20 mm	8 mm	10000
1059870000	THM GEW 20/8 WS	❍	White	20 mm	8 mm	10000

THM GEW fabric, flag

Technical data

Material	Temperature range	Fire class acc. to UL 94	Adhesive	Order No.	Type
Vinyl-coated cotton fabric	-29 °C...80 °C	V-0	Natural rubber adhesive	2005070000	RIBBON MM 110/360 SW

Ordering data

Order No.	Type		Colour	Length	Width	Qty.
1107350000	THM GEW FLAG 54/8 WS	❍	White	54 mm	8 mm	4000

THM ET - non-adhesive labels

Technical data

Material	Temperature range	Fire class acc. to UL 94	Adhesive	Order No.	Type
Polypropylene	-30 °C...100 °C	HB		2005080000	RIBBON MM 80/360 SW

Ordering data

Order No.	Type		Colour	Length	Width	Qty.
1487690000	THM ET 200SP 12.8/31 GE	●	Yellow	12.8 mm	31 mm	2000
1487680000	THM ET 200SP 12.8/31 TU	●	Turquoise	12.8 mm	31 mm	2000
1991670000	THM ET S7 1500 GE	●	Yellow	108.8 mm	22.9 mm	500
1991680000	THM ET S7 1500 TU	●	Turquoise	108.8 mm	22.9 mm	500
2093070000	THM ET S7 1500-13 GE	●	Yellow	108.8 mm	22.9 mm	500
2093010000	THM ET S7 1500-13 TU	●	Turquoise	108.8 mm	22.9 mm	500
1161770000	THM ET S7 300-1 GE	●	Yellow	103 mm	22.6 mm	500
1161750000	THM ET S7 300-1 TU	●	Turquoise	103 mm	22.6 mm	500
1161740000	THM ET S7 300-2 GE	●	Yellow	103.8 mm	17.3 mm	1000
1161730000	THM ET S7 300-2 TU	●	Turquoise	103.8 mm	17.3 mm	1000
1161810000	THM ET S7 50/12.5 GE	●	Yellow	50 mm	12.5 mm	2000
1161790000	THM ET S7 50/12.5 TU	●	Turquoise	50 mm	12.5 mm	2000
1095590000	THM ET S7 50/25 GE	●	Yellow	50 mm	25 mm	1250
1161780000	THM ET S7 50/25 TU	●	Turquoise	50 mm	25 mm	1250

THM PA ESO paper - non-adhesive labels

Technical data

Material	Temperature range	Fire class acc. to UL 94	Adhesive	Order No.	Type
Paper	-40 °C...70 °C			2005070000	RIBBON MM 110/360 SW

Ordering data

Order No.	Type		Colour	Length	Width	Qty.
1339580000	THM ESO 7 PA GE	●	Yellow	27 mm	6.3 mm	2500
1339570000	THM ESO 7 PA WS	❍	White	27 mm	6.3 mm	2500

ET S7 non-adhesive labels

Technical data

Material	Temperature range	Fire class acc. to UL 94	Adhesive
Vinyl film	-40 °C...80 °C	HB	

Ordering data

Order No.	Type	Colour	Length	Width	No. of Qty.	Qty.
1804480000	ET S7-12/50 GE-A4	Yellow	50 mm	12 mm	840	10
1865440000	ET S7-12/50-TU-A4	Turquoise	50 mm	12 mm	840	10
1045500000	ET S7-200-TU-A4-1	Turquoise	203 mm	15.5 mm	800	10
1045490000	ET S7-200-TU-A4-2	Turquoise	203 mm	12 mm	800	10
1821020000	ET S7-300-GE-A4-1	Yellow	100 mm	22.6 mm	160	10
1847650000	ET S7-300-GE-A4-2	Yellow	208 mm	17.3 mm	220	10
1865450000	ET S7-300-TU-A4-1	Turquoise	100 mm	22.6 mm	160	10
1865460000	ET S7-300-TU-A4-2	Turquoise	208 mm	17.3 mm	220	10
1821040000	ET S7-400-GE-A4-1	Yellow	251 mm	11.5 mm	140	10
1821030000	ET S7-400-GE-A4-2	Yellow	251 mm	11.5 mm	140	10
1847640000	ET S7-400-GE-A4-3	Yellow	251 mm	13.5 mm	140	10
1865470000	ET S7-400-TU-A4-1	Turquoise	251 mm	11.5 mm	140	10
1865480000	ET S7-400-TU-A4-2	Turquoise	251 mm	11.5 mm	140	10
1865490000	ET S7-400-TU-A4-3	Turquoise	251 mm	13.5 mm	140	10

LM MT 300

Technical data

Material	Temperature range	Fire class acc. to UL 94	Adhesive
Polyester, PVC-free	-40 °C...150 °C	HB	Acrylate adhesive

Ordering data

Order No.	Type		Colour	Length	Width	No. of Qty.	Qty.
1882910000	LM MT300 12/6 GE	●	Yellow	12 mm	6 mm	3220	10
1724141044	LM MT300 15/4.6 WS	❍	White	15 mm	4.63 mm	6270	10
1724141687	LM MT300 15/4.6 GE	●	Yellow	15 mm	4.63 mm	6270	10
1724140001	LM MT300 15/4.6 SI	●	Silver	15 mm	4.63 mm	6270	10
1686361044	LM MT300 15/6 WS	❍	White	15.2 mm	6 mm	4840	10
1686361687	LM MT300 15/6 GE	●	Yellow	15.2 mm	6 mm	4840	10
1686360001	LM MT300 15/6 SI	●	Silver	15.2 mm	6 mm	4840	10
1882890000	LM MT300 15/9 GE	●	Yellow	15 mm	9 mm	1860	10
1835820000	LM MT300 17/6 GE	●	Yellow	17 mm	6 mm	4400	10
1724151044	LM MT300 17/9 WS	❍	White	17.8 mm	9 mm	3410	10
1724151687	LM MT300 17/9 GE	●	Yellow	17.8 mm	9 mm	3410	10
1724150001	LM MT300 17/9 SI	●	Silver	17.8 mm	9 mm	3410	10
1749321044	LM MT300 18/6.5 WS	❍	White	18 mm	6.5 mm	3200	10
1749321687	LM MT300 18/6.5 GE	●	Yellow	18 mm	6.5 mm	3200	10
1749320001	LM MT300 18/6.5 SI	●	Silver	18 mm	6.5 mm	3200	10
1835830000	LM MT300 19/6.3 GE	●	Yellow	19.05 mm	6.3 mm	2560	10
1686381044	LM MT300 20/8 WS	❍	White	20.3 mm	8 mm	2640	10
1686381687	LM MT300 20/8 GE	●	Yellow	20.3 mm	8 mm	2640	10
1686380001	LM MT300 20/8 SI	●	Silver	20.3 mm	8 mm	2640	10
1686391044	LM MT300 25.4/12.7 WS	❍	White	25.4 mm	12.7 mm	1470	10
1686391687	LM MT300 25.4/12.7 GE	●	Yellow	25.4 mm	12.7 mm	1470	10
1686390001	LM MT300 25.4/12.7 SI	●	Silver	25.4 mm	12.7 mm	1470	10
1686401044	LM MT300 26/10 WS	❍	White	26 mm	10 mm	1560	10
1686401687	LM MT300 26/10 GE	●	Yellow	26 mm	10 mm	1560	10
1686400001	LM MT300 26/10 SI	●	Silver	26 mm	10 mm	1560	10
1861510000	LM MT300 27/8 GE	●	Yellow	27 mm	8 mm	1980	10
1873810000	LM MT300 27/18 SI	●	Silver	27 mm	18 mm	900	10
1724161044	LM MT300 30/20 WS	❍	White	30 mm	20 mm	780	10
1724160001	LM MT300 30/20 SI	●	Silver	30 mm	20 mm	780	10
1724161687	LM MT300 30/20 GE	●	Yellow	30 mm	20 mm	780	10
1140460000	LM MT300 35/16 WS	❍	White	35 mm	16 mm	850	10
1760461044	LM MT300 40/6 WS	❍	White	40 mm	6 mm	1760	10
1686421044	LM MT300 56/22 WS	❍	White	56 mm	22 mm	360	10
1686420001	LM MT300 56/22 SI	●	Silver	56 mm	22 mm	360	10
1686421687	LM MT300 56/22 GE	●	Yellow	56 mm	22 mm	360	10
1686431044	LM MT300 60/36 WS	❍	White	60 mm	36 mm	210	10
1686431687	LM MT300 60/36 GE	●	Yellow	60 mm	36 mm	210	10
1686430001	LM MT300 60/36 SI	●	Silver	60 mm	36 mm	210	10
1003400000	LM MT300 89/34 WS	❍	White	89 mm	34 mm	160	10
1975160000	LM MT300 105/105 SI	●	Silver	105 mm	105 mm	40	10
1724171044	LM MT300 105/148 WS	❍	White	105 mm	148 mm	40	10
1724170001	LM MT300 105/148 SI	●	Silver	105 mm	148 mm	40	10
1915320000	LM MT300 202/12 GE	●	Yellow	202 mm	12 mm	220	10
1724181687	LM MT300 210/148 GE	●	Yellow	210 mm	148 mm	20	10
1724180001	LM MT300 210/148 SI	●	Silver	210 mm	148 mm	20	10
1686441044	LM MT300 210/297 WS	❍	White	210 mm	297 mm	10	10
1686441687	LM MT300 210/297 GE	●	Yellow	210 mm	297 mm	10	10
1686440001	LM MT300 210/297 SI	●	Silver	210 mm	297 mm	10	10

TABPACK FLAG bag

Technical data

Material	Temperature range	Fire class acc. to UL 94	Adhesive
Cotton fabric	-29 °C...80 °C	V-0	Natural rubber adhesive

Ordering data

Order No.	Type	Colour	Length	Width	No. of Qty.	Qty.
1107340000	TABPACK FLAG 54/8 WS	White	54 mm	8 mm	120	1

TABPACK

Technical data

Material	Temperature range	Fire class acc. to UL 94	Adhesive
Acrylic-coated fibre webbing	-29 °C...80 °C		Permanent acrylic copolymer

Ordering data

Order No.	Type	Colour	Length	Width	No. of Qty.	Qty.
1686110000	TABPACK 14X9	Yellow	14 mm	9 mm	840	1
1686120000	TABPACK 15X6	Yellow	15 mm	6 mm	1000	1
1686130000	TABPACK 19X11 M. RAND	Yellow	19 mm	11 mm	440	1
1686140000	TABPACK 21X8	Yellow	21 mm	8 mm	620	1

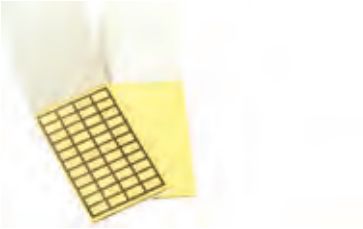

Symbol Pack

Technical data

Material	Adhesive	Fire class acc. to UL 94	Temperature range	Colour
Acrylic-coated fibre webbing	Permanent acrylic copolymer		-45 °C...80 °C	Yellow

Ordering data

Order No.	Type	Number	Length / Height	Printing	No. of Qty.	Qty.
1741090000	SYMBOL-P. 25X25X25 B/DR	12	25 / 25 mm	⚠	120	1
1741100000	SYMBOL-P. 50X50X50 B/DR	4	50 / 50 mm	⚠	40	1
1741110000	SYMBOL-P. 75X75X75 B/DR	2	75 / 75 mm	⚠	20	1

Service Pack

Technical data

Material	Adhesive	Fire class acc. to UL 94	Temperature range	Colour
Acrylic-coated fibre webbing	Permanent acrylic copolymer		-45 °C...80 °C	Black

Ordering data

Order No.	Type	Number	Length / Height	Printing	No. of Qty.	Qty.
1707350001	SERV-P. DIAM16 L1 SW/WS	20	16 / 16 mm	L1	200	1
1707350002	SERV-P. DIAM16 L2 SW/WS	20	16 / 16 mm	L2	200	1
1707350003	SERV-P. DIAM16 L3 SW/WS	20	16 / 16 mm	L3	200	1
1707350004	SERV-P. DIAM16 N BL/WS	20	16 / 16 mm	N	200	1
1707350006	SERV-P. DIAM16 PE GE/GN	20	16 / 16 mm	PE	200	1
1707350005	SERV-P.DIAM16ERDE GE/GN	20	16 / 16 mm	⏚	200	1

Marko Cards

Technical data

Material	Adhesive	Fire class acc. to UL 94	Temperature range	Colour
Acrylic-coated fibre webbing	Permanent acrylic copolymer		-29 °C...80 °C	Yellow

Ordering data

Order No.	Type	Number	Length/Height	Printing	No. of Qty.	Qty.
1700530001	MARKO-C. 25X25X25 B/DR.	14	25 / 25 mm	⚠	140	10
1700540001	MARKO-C. 50X50X50 B/DR.	7	50 / 50 mm	⚠	70	10
1700550001	MARKO-C.100X100X100 B/DR	3	100 / 100 mm	⚠	30	10
1700560001	MARKO-C.200X200X200 B/DR	1	200 / 200 mm	⚠	10	10

PageTab

Technical data

Material	Adhesive	Fire class acc. to UL 94	Temperature range	Colour
Acrylic-coated fibre webbing	Permanent acrylic copolymer		-29 °C...93 °C	Yellow

Ordering data

Order No.	Type	Number	Length/Height	Printing	No. of Qty.	Qty.
1686160000	PAGETAB 15/9	310	15 / 9 mm	Neutral	7750	25
1686170000	PAGETAB 19/11	200	19 / 11 mm	Neutral	5000	25
1686180000	PAGETAB 20/8	280	20 / 8 mm	Neutral	7000	25
1686190000	PAGETAB 28/11	125	28 / 11 mm	Neutral	3125	25
1686200000	PAGETAB 38/11	100	38 / 11 mm	Neutral	2500	25
1686210000	PAGETAB 56/22	24	56 / 22 mm	Neutral	600	25
1686220000	PAGETAB 60/35	16	60 / 35 mm	Neutral	400	25

KSW – Printed lables

KSW marker strips are used for labelling multipole plug-in connectors. You can be printed individually by the user for any contact spacing.

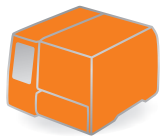

THM MMP

- Wipe-proof labelling
- Strip width 2.5 mm and 4 mm
- Simply stick on – that's all!
- Optimum adhesion
- PVC-free

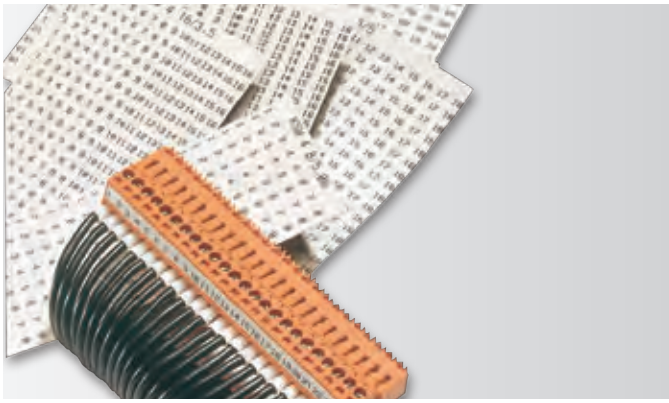

KSW 2.5 15/5.08														
1	2	3	4	5	6	7	8	9	10	11	12	13	14	15
1	2	3	4	5	6	7	8	9	10	11	12	13	14	15
1	2	3	4	5	6	7	8	9	10	11	12	13	14	15
1	2	3	4	5	6	7	8	9	10	11	12	13	14	15
1	2	3	4	5	6	7	8	9	10	11	12	13	14	15
1	2	3	4	5	6	7	8	9	10	11	12	13	14	15
1	2	3	4	5	6	7	8	9	10	11	12	13	14	15
1	2	3	4	5	6	7	8	9	10	11	12	13	14	15
1	2	3	4	5	6	7	8	9	10	11	12	13	14	15
1	2	3	4	5	6	7	8	9	10	11	12	13	14	15
1	2	3	4	5	6	7	8	9	10	11	12	13	14	15
1	2	3	4	5	6	7	8	9	10	11	12	13	14	15
1	2	3	4	5	6	7	8	9	10	11	12	13	14	15
1	2	3	4	5	6	7	8	9	10	11	12	13	14	15
1	2	3	4	5	6	7	8	9	10	11	12	13	14	15
1	2	3	4	5	6	7	8	9	10	11	12	13	14	15
1	2	3	4	5	6	7	8	9	10	11	12	13	14	15
1	2	3	4	5	6	7	8	9	10	11	12	13	14	15
1	2	3	4	5	6	7	8	9	10	11	12	13	14	15
1630060001														

1 unit = 1 sheet = 20 strips

Order example:
Order No. **163006 0001** = version
KSW 2.5 15/5.08 1-15

- 20 x 1-15 print
- 5.08 mm spacing
- 15 pole
- 2.5 mm strip width

Strip width 2.5 mm

Pitch 5.08 mm

Special print: length = pitch x no. of poles
Please state contact spacing

Technical data

Material	Polyester with smooth surface
Colour	White
Adhesive	Acrylate base
Adhesion (strip width 25 mm) to DIN 51221	On steel: 19 N, polypropylene: 12 N, Polyethylene: 10 N
Minimum adhesion temperature	+4 °C
Behaviour in fire	Self-extinguishing after 15 seconds, non-drip
Packaging unit	10 sheets (special print = 1 sheet)
Strip/sheet	20
Possible printing systems	THM NNP

KSW 2.5 und KSW 4 neutral

Technical data

Material	Colour	Adhesive
Polyester, PVC-free	White	Acrylate

Ordering data

Order No.	Type	Pitch, in mm	Printing	Qty.
1812660000	KSW 2.5 EL WS 50M	2.50 mm	Blank	50
1812670000	KSW 4.0 EL WS 50M	4.00 mm	Blank	50

KSW 2.5 und KSW 4 custom printing

Technical data

Material	Colour	Adhesive
Polyester, PVC-free	White	Acrylate

Ordering data

Order No.	Type	Pitch, in mm	Printing	Qty.
1629900000	KSW 2.5 < 50MM SDR	2.50 mm	Custom printing	1
1629920000	KSW 2,5 < 100MM SONDDR.	2.50 mm	Custom printing	1
1629940000	KSW 2,5 < 150MM SONDDR.	2.50 mm	Custom printing	1
1629910000	KSW 4 < 50MM SDR	50.00 mm	Custom printing	1
1629930000	KSW 4 < 100MM SDR	100.00 mm	Custom printing	1
1629950000	KSW 4 < 150MM SONDDR.	150.00 mm	Custom printing	1

KSW 2.5 and KSW 4 standard printing

Technical data

Material	Colour	Adhesive
Polyester, PVC-free	White	Acrylate

Ordering data

Order No.	Type	Pitch, in mm	Printing	Qty.
1630100001	KSW 2,5 8/5,08 1-8	5.08 mm	1 - 8	10
1630100009	KSW 2,5 8/5,08 9-16	5.08 mm	9 - 16	10
1652250001	KSW 2,5 24/3,5 1-24	3.50 mm	1 - 24	10
1705820001	KSW 4 10/5,08 W 1-10	5.08 mm	1 - 10	10
1630150001	KSW 4 16/3,5 1-16	3.50 mm	1 - 16	10
1630160001	KSW 4 16/5,08 1-16	5.08 mm	1 - 16	10
1630160017	KSW 4 16/5,08 17-32	5.08 mm	17 - 32	10
1630200001	KSW 4 8/5,08 1-8	5.08 mm	1 - 8	10
1630180001	KSW 4 24/5,08 1-24	5.08 mm	1 - 24	10

Marking systems

Marking systems	Introduction	F.2
	PrintJet ADVANCED – the efficient inkjet printer for highest standards	F.6
	MCP Plus 2 – plotter for low marking requirements	F.10
	MCP Basic 2 – mobile and light plotter	F.12
	THM MMP – the compact all-rounder	F.14
	THM Plus M – thermal transfer printer for harsh industrial environments	F.16
	THM TwinMark – thermal transfer printer for printing shrink sleeves on both sides	F.18

Marking systems

Our marking systems can be used to quickly and reliably label terminal markers, wire and cable markers, device markers and labels.

Electrical equipment can be identified quickly and easily with our M-Print® PRO software. Our PrintJet ADVANCED printer, MCP Plus 2 plotter, MCP Basic 2 Plotter and the thermal-transfer printer are available for your printouts.

PrintJet ADVANCED
The PrintJet ADVANCED printer is designed for all Weidmüller MultiCards. It is able to process large quantities in a short space of time, thanks to its integrated loader. The printer is able to effortlessly implement colour printing, graphics and logos. Labelling on metal surfaces, with optimum printing quality and outstanding legibility, sets new standards for the future.

MCP Plus 2
The MCP Plus 2 is suitable for lesser marking requirements, with frequent part-labelling and residual material processing. It enables processing to be increased by 20 % in comparison with similar systems.

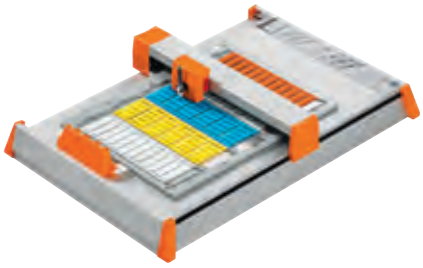

THM MMP
The THM MMP is a robust and modular thermal transfer printer which is particularly beneficial when processing continuous materials. The optional cutting and perforation function enables continuous materials to be cut to any length, making work easier when trimming and allocating the identification areas.

THM Plus M
The THM Plus M is a printer for Printer for high volumes of heat shrinks and labels. The robust design it is particularly suitable for industrial environement.

MCP Basic 2
The portable MCP Basic 2 plotter is suitable for lesser marking requirements, part-labelling and processing residual quantities directly, on site.

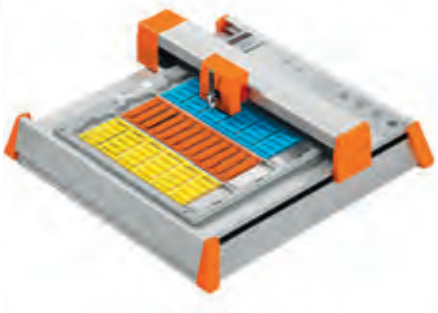

THM TwinMark
The THM TwinMark enables shrink sleeve printing on both sides. The printer offers outstanding printing quality and is suitable for TwinMark shrink sleeves on reels.

Marking systems and software

Our labelling systems are the quick and efficient way of producing markers for connectors, wires, cables and devices, plus labels for general use. Our **M-Print® PRO** software means you can mark electrical equipment quickly and simply in addition to delivering professional and fast design, printing and ordering of your marking requirements. In addition, borders, barcodes, graphics and photos can all be easily integrated. The multitude of data conversion routines presents you with fast and flexible options for data integration. The Weidmüller **PrintJet ADVANCED, MCP Plus 2, MCP Basic 2** and several thermal transfer printers can be used for printing.

The **PrintJet ADVANCED** is the reference model in industrial marking for high-resolution printing and maximum wipe and scratch resistance. The **MCP Plus 2** plotter provides you with good flexibility, because with its positioning frame it can handle more than 200 different types of marker in the MultiCard format. The thermal transfer printers of the THM series are ideal for printing labels and/or shrinkable sleeves in excellent quality. With the THM MMP you can also print continuous strips for terminal blocks.

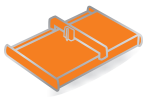
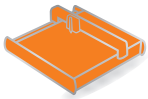

	Printer		
Type of marker	**PrintJet ADVANCED**	**MCP Plus 2**	**MCP Basic 2**
Technical data			
Technology	Inkjet process	Plotting technique	Plotting technique
Spannung	AC 230 V / AC 115 V	AC 230 / AC 115 V	AC 230 / AC 115 V
Auflösung	1.200 dpi		
Schnittstellen	USB, LAN	USB	USB
Netzwerkkarte	●		
Order No.	1324380000 (230 V), 1338700000 (115 V)	2438510000	2438520000
Terminal markers			
DEK/WS/ZS/MF	●	●	●
ELS	●	●	●
WAD	●		
DEK MM / WS MM			
Cable and wire markers			
SF/SFR/SFX/SFC	●	●	●
TM-I	●	●	●
ELS	●	●	●
Device markers			
DMC	●	●	●
ESG	●	●	●
SM/CC	●	●	●
Labels			
TM-I MM			
WM MM			
SFX MM			
ESG MM			
SM MM			
CC MM			
EL MM			
ELS MM			
THM MT			
THM MT FS			
THM WO			
THM GEW			
THM EL			
THM ET S7			
THM PA			
THM PA ESO			
Shrink sleeves			
TwinMark			
TwinMark Endlos			

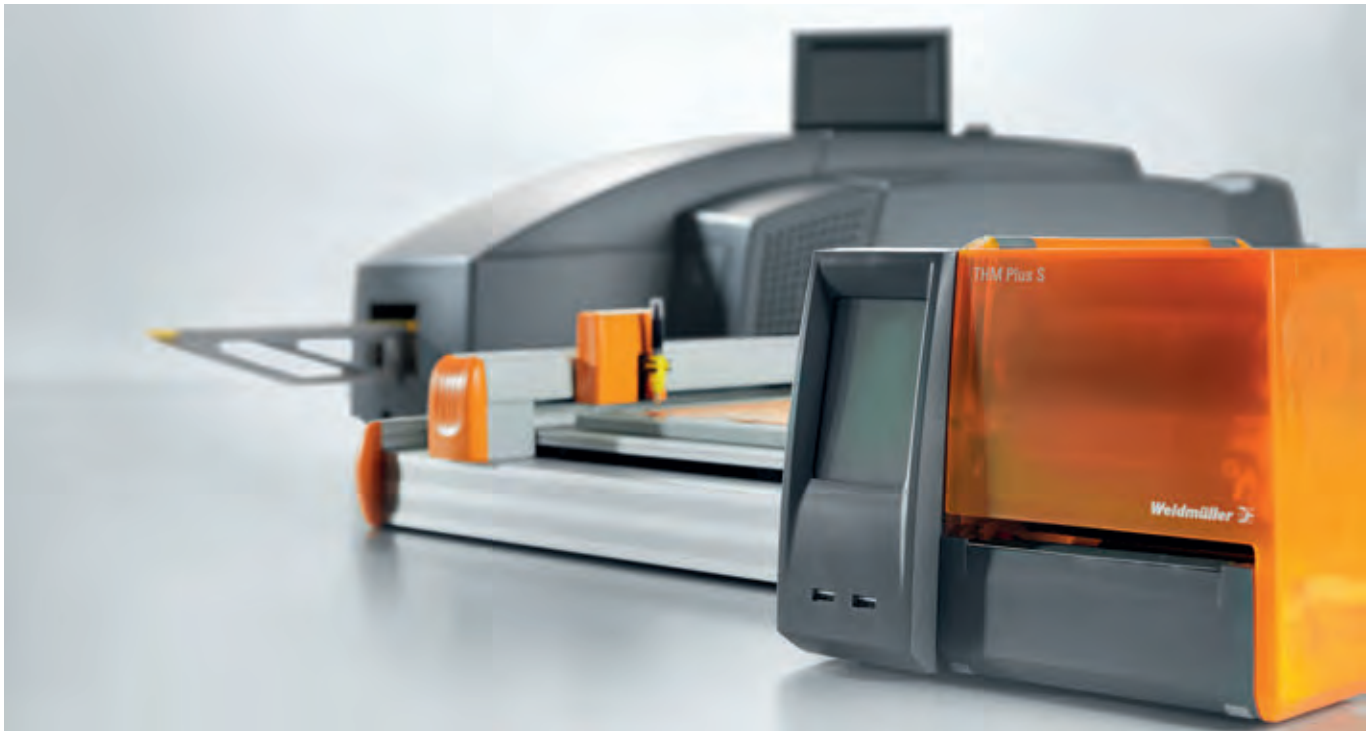

Printer		
THM MMP	**THM Plus M**	**THM TwinMark**
Thermal transfer	Thermal transfer	Thermal transfer
AC 230 / AC 115 V	AC 230 / AC 115 V	AC 230 / AC 115 V
300 dpi	300 dpi	300 dpi
USB, LAN	RS232, USB, LAN, Compact Flash	RS232, USB, LAN
●	●	●
2430920000	2448870000	1140490000
●		
●	●	
●	●	
●	●	
●	●	
●	●	
●	●	
●	●	
●	●	
●	●	
●	●	
●	●	
●	●	
●	●	
●	●	
●	●	
●	●	●
●	●	

PrintJet ADVANCED
The advanced inkjet printer

Want to organise your time efficiently and complete marking work without any stress? Then your marking system needs to provide maximum flexibility and be available at any location.
Want to print a large number of markers during peak hours without drops in quality and without monitoring if at all possible? The PrintJet ADVANCED reliably meets all these needs and more.
See for yourself its unique functions which will make light work of your marking tasks. You can't fail to be impressed with how the PrintJet ADVANCED optimises your work processes.

Metal marking as standard
You can use the PrintJet ADVANCED to print both MultiCard and MetalliCard formats. This offers you maximum scope of use, flexibility and independence from external providers.

Highly resistant labelling
The self-regulating thermal fixing for surface sealing of a consistent quality makes the marker incredibly resistant and extremely durable in an industrial environment. This saves money because the marker doesn't have to be replaced on a regular basis.

Intuitive touch display
The 5.7" true colour TFT touch panel can be swivelled and tilted to greatly simplify the work process. Use of an easy-to-understand operator front-end reduces complexity to an absolute minimum and makes your work stress-free and very simple. 25 integrated languages make the printer a global player.

High magazine capacity
With a holding capacity of up to 30 MultiCards, the PrintJet ADVANCED is able to process 6000 markers with just one click – no need for operator intervention and ready for immediate use. A high level of automation which improves efficiency and optimises processes at the same time.

Brilliant colour printing
It's easier to maintain and identify equipment with colour identification. Warning and safety information have a clear impact due to signal colours. Some standards even recommend colour identification.

Unbeatable overall package
Brilliant print result, absolute process stability and a high level of automation: challenging marking requirements are met by the PrintJet ADVANCED. Its low operating costs speak for themselves – it doesn't get any more efficient than this!

The advanced inkjet printer
Our PrintJet ADVANCED for exacting standards

Flexible printing of plastic and metal markers

The PrintJet ADVANCED is an inkjet printer which prints plastic markers in MultiCard format and metal markers from the MetalliCard family. Thanks to its high magazine capacity, it is ideal for printing large volumes in continuous operation. The precise colour printing and thermal fixing guarantee optimum print results for durable equipment identification. With these properties, the PrintJet ADVANCED brings efficiency to the operating process – whether operated with our M-Print® PRO software or as a stand-alone solution with pre-installed print templates.

The 5.7" true colour TFT touch panel can be swivelled and tilted to greatly simplify the work process.

The advantages for you at a glance:

- Precise colour printing
- Printing of metal markers as standard
- High level of automation thanks to magazine capacity of 30 MultiCards
- Durable and robust markers thanks to thermal fixing
- User-friendly thanks to intuitive touch display
- Can be used as stand-alone solution

Printing of plastic and metal markers as standard.

Technical data

	Description	
Intended use	Printing Weidmüller MultiCards and MetalliCards	
Technology	Inkjet procedure with integrated thermal fixing unit	
Feed	Automatic magazine for max. 30 MultiCards Individual feed for MetalliCards and MultiCards	
Fuses	Right fuse: 10 ATH 240/120 V Left fuse: 2.5 ATH 240/120 V	
Application site	Office conditions	
Ambient temperature	10 °C – 35 °C 0 °F – 95 °F	
Dimensions	Length including output rail: Length not including output rail: Width: Height with touch panel folded down: Height with touch panel folded up:	approx. 1.138 mm (44.80") approx. 945 mm (37.20") 554 mm (21.81") 328 mm (12.91") 422 mm (16.61")
Weight	57.8 kg (127.43 lb) with packaging 37.2 kg (82.01 lb) without packaging	
Ink system	Colour system – black, cyan, magenta, yellow	
Included in delivery	• PrintJet ADVANCED • Mains cable • USB cable • One MultiCard DEK 5/5	• One output rail • DVD with M-Print® PRO software • Quick start guide • Operating manual
	The ink cartridges and ink collector tray are installed in the printer.	

High magazine capacity up to 30 MultiCards.

Ink-jet printer

PrintJet ADVANCED

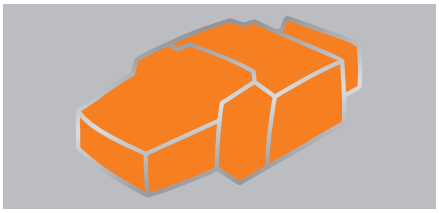

Technical data

EAN	4050118127867
Length	950 mm
Width	555 mm
Height	310 mm
Net weight	48000 Kg
Printing method	Ink jet technology
Printer driver / Operating system	Windows 7, Windows 8, Windows 8.1, Windows 10
Printing speed	Depends on printing quality
Print quality	1200 dpi
Marker type	MultiCard, MetalliCard
Interface	LAN, USB
Fueling system	Ink cartridge, CMYK
Supply voltage	230 V AC / 16 A, 115 V AC / 20 A
Software	M-Print® PRO
Note	

Ordering data

Type	Qty.	Order No.
PRINTJET ADVANCED 115V	1	1338700000
PRINTJET ADVANCED 230V	1	1324380000

Note

Accessories

	Type	Qty.	Order No.
PrintJet ADVANCED			
Software	M-PRINT PRO	1	1905490000
Ink collecting tray	PJ ADV TNAW	1	1338710000
Cyan ink	PJ ADV TNTK INK C	1	1338680000
Magenta ink	PJ ADV TNTK INK M	1	1338670000
Yellow ink	PJ ADV TNTK INK Y	1	1338650000
Black ink	PJ ADV TNTK INK K	1	1338690000
Ink set	PJ ADV TNTK INK SET	1	1338720000
PrintJet PRO			
Ink collecting tray	PJ PRO TNAW	1	1024140000
Cyan ink	PJ PRO TNTK INK C	1	1027050000
Magenta ink	PJ PRO TNTK INK M	1	1027060000
Yellow ink	PJ PRO TNTK INK Y	1	1027070000
Black ink	PJ PRO TNTK INK K	1	1027040000
Ink set	PJ PRO TINTENSET FARBE	1	1027110000

Note

MCP Plus 2 Plotter
Ideal for small quantities

All-rounder with optimised use of space

The MCP Plus 2 is a flexible A3 plotter with labelling options for different applications. Three easily fitted receiver plates cover more than 250 types of MultiCards and label sheets. This means that you can simply and accurately print on remaining sheets, with simultaneous printing of up to 5 Multicards. By using the appropriate mounting plate, you determine if you want to create small or large numbers of markers or if you wish to print labels. A pen repository takes the order and ensures that the plotter pens are always available.

Your advantages from the MCP Plus 2 Plotter

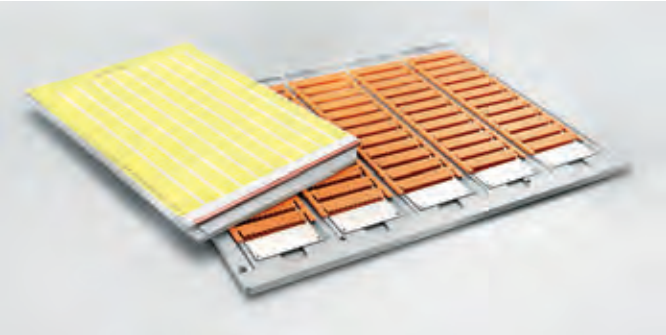

One printing system for various applications: the MCP Plus 2 prints over 250 types of MultiCards and labels.

The mounting plate can be divided in an economical way: ideal for remaining stocks, part printing and low marking requirements.

Technical data

	Description
Intended use	Printing Weidmüller MultiCards and DIN A4 labels
Technology	Flat bed plotter
Feed	Manuall mounting
Application site	Office conditions
Ambient temperature	10 °C to 35 °C
Included in delivery	• Plotter MCP Plus 2 • MultiCard mounting plate MCP AP PLUS • 5 Inlays MCP EP • Mains cable, Power supply (100–240 V AC / 5060 Hz), Euro plug • US plug and UK plug • Plotter pen 0.25 P-Ink • USB cable • Operating manual • DVD with M-Print® PRO software

If you use an MCP plotter, even small quantities can be printed.

Plotter

MCP Plus 2

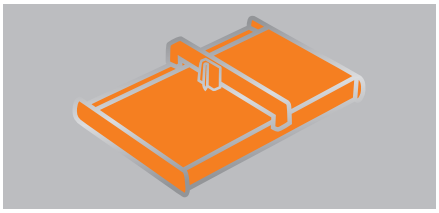

Technical data

EAN	4050118465389
Length	690 mm
Width	480 mm
Height	155 mm
Net weight	14008 Kg
Printing method	Plotter printing with india ink
Printer driver / Operating system	Windows 7, Windows 8, Windows 8.1, Windows 10
Printing speed	max. 40 cm/s
Marker type	MultiCard, Labels
Interface	USB
Supply voltage	100...240 V AC
Software	M-Print® PRO
Note	

Ordering data

Type	Qty.	Order No.
MCP PLUS 2	1	2438510000
Note		

Accessories

	Type	Qty.	Order No.
Mounting plates			
	MCP AP PLUS	1	1924360000
	MCP AP SF4-6	1	1924310000
	MCP AP LABLES	1	1924370000
	MCP EP SFC 3	1	1058090000
Plotter pen / adapter			
Reusable pens	Plotterpen 0,18	1	1768570000
	Plotterpen 0,25	1	1768540000
	Plotterpen 0,35	1	1768550000
	Plotterpen 0,5	1	1768560000
	PLOTTERPEN 0,7	1	1011440000
Disposable pens	PLOTTER PEN 0.25 P-INK	1	1920640000
	PLOTTER PEN 0.35 P-INK	1	1920650000
	PLOTTER PEN 0.50 P-INK	1	1005710000
	PLOTTER PEN 0.70 P-INK	1	1011450000
STI pen	STI Waterproof schwarz	10	0508401694
STI pen adapter	ADAPTER ALU STI-S	1	1762440000
Ink / cleaner			
INK 2000 ink	Tinte 2000 25ml	1	1772120000
P-Ink ink	P-Ink 2.0	1	1924340000
INK 2000 cleaner	Reiniger 2000 25ml	1	1772130000
P-Ink cleaner	P-CLEANER	1	1924330000
Dust cover			
	MCP PLUS 2 COVER	1	2493070000
Note			

MCP Basic 2 Plotter
Flexible on-site marking

Small size and readily on hand

The MCP Basic 2 is used when you need to print markers anywhere on-site in small quantities. The plotter is compact in size and can quickly be up and running wherever you are. Thanks to its low weight, it can be easily up and running everywhere quickly.

With three optionally usable mounting plates, the MCP Basic 2 covers over 250 types of MultiCards and labels. Particularly useful is the option to accept individual segments which makes it the perfect device for marking small quantities and reduces loss from unused signs.

Your advantages from the MCP Basic 2 Plotter

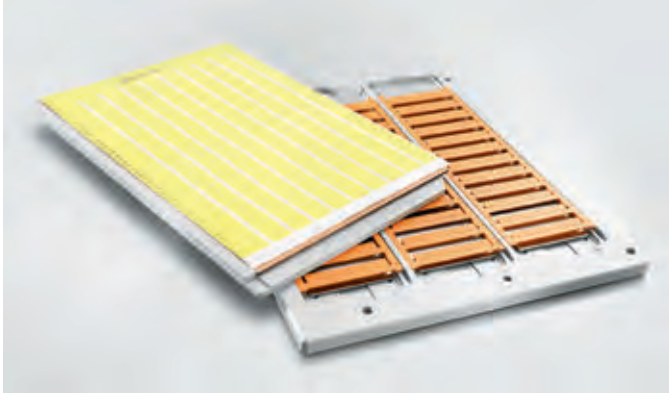

Flexible for different applications: the MCP Basic 2 prints MultiCards and labels.

Single labels, sub-segments or remaining quantities: the MCP Basic 2 allows you to use the materials in an economical and targeted way.

Technical data

	Description
Intended use	Printing Weidmüller MultiCards and DIN A4 labels
Technology	Flat bed plotter
Feed	Manuall mounting
Application site	Office conditions
Ambient temperature	10 °C to 35 °C
Included in delivery	• Plotter MCP Basic 2 • MultiCard mounting plate MCP AP BASIC • 3 Inlays MCP EP • Mains cable, Power supply (100–240 V AC / 5060 Hz), Euro plug • US plug and UK plug • Plotter pen 0.25 P-Ink • USB cable • Operating manual • DVD with M-Print® PRO software

Plotter

MCP Basic 2

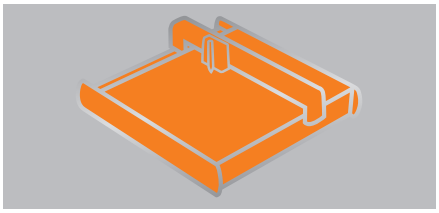

Technical data

EAN	4050118465396
Length	470 mm
Width	480 mm
Height	155 mm
Net weight	9620 Kg
Printing method	Plotter printing with india ink
Printer driver / Operating system	Windows 7, Windows 8, Windows 8.1, Windows 10
Printing speed	max. 40 cm/s
Marker type	MultiCard, Labels
Interface	USB
Supply voltage	100...240 V AC
Software	M-Print® PRO
Note	

Ordering data

Type	Qty.	Order No.
MCP BASIC 2	1	2438520000

Note

Accessories

	Type	Qty.	Order No.
Mounting plates			
	MCP AP BASIC	1	1139880000
	MCP AP LABLES	1	1924370000
	MCP AP SF4-6	1	1924310000
	MCP EP SFC 3	1	1058090000
	MCP EP	1	1935130000
Plotter pen / adapter			
Reusable pens	Plotterpen 0,18	1	1768570000
	Plotterpen 0,25	1	1768540000
	Plotterpen 0,35	1	1768550000
	Plotterpen 0,5	1	1768560000
	PLOTTERPEN 0,7	1	1011440000
Disposable pens	PLOTTER PEN 0.25 P-INK	1	1920640000
	PLOTTER PEN 0.35 P-INK	1	1920650000
	PLOTTER PEN 0.50 P-INK	1	1005710000
	PLOTTER PEN 0.70 P-INK	1	1011450000
STI pen adapter	ADAPTER ALU STI-S	1	1762440000
STI pen	STI Waterproof schwarz	10	0508401694
Ink / cleaner			
INK 2000 ink	Tinte 2000 25ml	1	1772120000
P-Ink ink	P-Ink 2.0	1	1924340000
INK 2000 cleaner	Reiniger 2000 25ml	1	1772130000
P-Ink cleaner	P-CLEANER	1	1924330000
Dust cover			
	MCP BASIC 2 COVER	1	2493080000
Note			

Thermal transfer printer THM MMP
The compact all-rounder

The only printer you will need for your marking tasks

The THM MMP is a compact and modularly constructed thermal transfer printer that makes full use of its many advantages and high number of potential uses. The integrated cutting and perforation option enables continuous materials to be cut to any length – making your work considerably easier when it comes to cutting and assigning the respective labels. The printer edits markers and labels from the MultiMark family as well as continuous materials, textile and polyester labels, heat shrink sleeves and PLC labels.
Snap-on terminal markers are printed using a separate print contact presure roller, which can be changed in just 30 seconds.

Another plus: the device is very easy to operate thanks to an intuitive touch display and clear status indicators – in 22 languages. The compact design and low weight of 3.5 kg also ensures that the THM MMP really can be used anywhere, e.g. as a mobile printer for your on-site jobs.

Your benefits with MultiMark

- A printer for all jobs
- Ideal for small and medium print volumes
- Virtually maintenance-free thanks to thermal transfer technology
- Excellent readability (resolution: 300 dpi)
- Flexibility provided by modular perforation and cutting unit
- The contact presure roller can be changed in 30 seconds
- High output, from 250 Dekafix markers/min.

Technical data

	Description
Intended use	Printing Weidmüller MultiMark, DEK and WS strip marker, shrink tubes, label on rolls
Technology	Thermal transfer
Feed	Manuall mounting
Application site	Office conditions
Ambient temperature	5 °C to 40 °C
Included in delivery	• THM MMP • Power cable (Typ E+F/ UK/ USA) • USB cable • RIBBON MM-TB 25/360 SW • RIBBON MM 110/360 SW • Cardboard core • Print roller • Operating manual • DVD with M-Print® PRO software

All-rounder THM MMP: the printer handles marking jobs that would otherwise need to be done by several different devices.

DEK/WS: Flexible connector markers – print, clip, finished

The excellent characteristics of each marker make it easy for you to use MultiMark as Marking system.

Thermal transfer printer

THM MMP

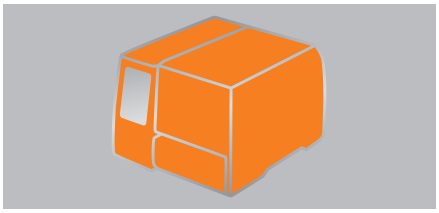

Technical data

EAN	4050118440973
Length	320 mm
Width	253 mm
Height	253 mm
Net weight	5800 Kg
Printing method	Thermotransfer
Printer driver / Operating system	Windows 7, Windows 8, Windows 8.1, Windows 10
Printing speed	125 mm/s
Marker type	MultiMark, Shrink sleeves, Label reel
Interface	USB, LAN
Supply voltage	100...240 V AC
Software	M-Print® PRO
Note	

Ordering data

Type	Qty.	Order No.
THM MMP	1	**2430920000**
Note		

Accessories

Type	Qty.	Order No.
Cutting blade		
THM MMP CUTTER	1	**1331600000**
THM MMP PERFORATOR	1	**1416330000**
Printer ribbons		
Terminal markers: RIBBON MM-TB 25/360 SW	1	**2005090000**
Label, wide, black: RIBBON MM 110/360 SW	1	**2005070000**
Label, narrow, black: RIBBON MM 80/360 SW	1	**2005080000**
Label, narrow, white: RIBBON MM 80/300 WS	1	**2005040000**
Shrink sleeve, endless: RIBBON HSS HF EL 40/300	1	**1426210000**
Shrink sleeve, assembled: RIBBON MM-HS 60/300 SW	1	**2448880000**
Miscellaneous accessories		
Reel holder: THM MMP EXT.RH	1	**1302920000**
Case: THM MMP CASE	1	**2457760000**
Note		

THM Plus M thermal transfer printer
Durable and sturdy for harsh environments

Fast speeds and robust metal housing

The THM Plus M is the perfect choice when you want to achieve high-quality results in the shortest possible time, when printing labels. Its intelligent internal workings mean that this thermal transfer printer can reach an output speed of up to 150 mm/s with a resolution of 300 dpi. The sturdy metal housing means that the THM Plus M can be used continuously even in harsh industrial environments.

Key benefits from the THM Plus M thermal transfer printer

Output of all continuous materials, fabric and polyester labels, shrink sleeves and PLC labels at high speed and high resolution.

Wide selection of MultiMark shrink tubes

Technical data

	Description
Intended use	Printing Weidmüller MultiMark, shrink tubes, label on rolls
Technology	Thermal transfer
Feed	Manuall mounting
Application site	Electrical workshop
Ambient temperature	5 °C to 40 °C
Included in delivery	• THM Plus M • Power cable (Typ E+F/ UK/ USA) • USB cable • RIBBON MM 110/360 SW • Cardboard core • Operating manual • DVD with M-Print® PRO software

Thermal transfer printer

THM Plus M

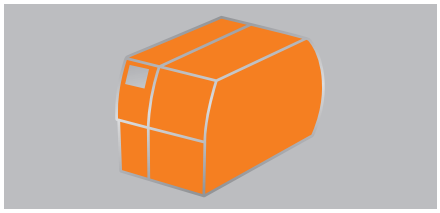

Technical data

EAN	4050118462951
Length	446 mm
Width	242 mm
Height	274 mm
Net weight	9 Kg
Printing method	Thermotransfer
Printer driver / Operating system	Windows 7, Windows 8, Windows 8.1, Windows 10
Printing speed	125 mm/s
Print quality	300
Marker type	Label reel, Shrink sleeves
Interface	LAN, USB
Supply voltage	100...240 V AC
Software	M-Print® PRO
Note	

Ordering data

Type	Qty.	Order No.
THM PLUS M	1	**2448870000**
Note		

Accessories

Printer ribbons	Type	Qty.	Order No.
Label, wide, black	RIBBON MM 110/360 SW	1	**2005070000**
Label, narrow, black	RIBBON MM 80/360 SW	1	**2005080000**
Label, narrow, white	RIBBON MM 80/300 WS	1	**2005040000**
Shrink sleeve, endless	RIBBON HSS HF EL 40/300	1	**1426210000**
Shrink sleeve, assembled	RIBBON MM-HS 60/300 SW	1	**2448880000**
Note			

THM TwinMark thermal transfer printer
Double-sided printing

Ideal for rolls and large quantities

The THM TwinMark is the ideal choice for printing large quantities of shrink sleeves. The powerful thermal transfer printer works through large quantities at a high resolution (300 dpi) without problems and is optimally suited for reels with up to 10,000 large diameter sleeves.
Thanks to its separately operating print heads, you can print on both sides with different content in a single work step.

Key benefits of the THM TwinMark thermal transfer printer

Time-saving and intelligent: double-sided printing with different content in one work step.

Can cope with large quantities: can deal with reels with up to 10,000 shrink tubing sleeves.

The THM TwinMark is a very durable device thanks to its stable construction and metal housing.

Technical data

	Description
Intended use	Printing Weidmüller Shrink tubes
Technology	Thermal transfer
Feed	Manuall mounting
Application site	Office conditions
Ambient temperature	5 °C to 40 °C
Included in delivery	• THM TwinMark • Power cable (Typ E+F/ UK/ USA) • USB cable • RIBBON MM 110/360 SW • Cardboard core • Operating manual • DVD with M-Print® PRO software

Thermal transfer printer

THM TwinMark

Technical data

EAN	4032248922413
Length	554 mm
Width	248 mm
Height	395 mm
Net weight	21000 Kg
Printing method	Thermotransfer
Printer driver / Operating system	Windows 7, Windows 8, Windows 8.1, Windows 10
Printing speed	125 mm/s
Print quality	300 dpi
Marker type	Shrink sleeves
Interface	USB, Ethernet 10/100 Base T, LAN
Supply voltage	100...240 V AC
Software	M-Print® PRO
Note	

Ordering data

Type	Qty.	Order No.
THM-TWINMARK	1	**1140490000**

Note

Accessories

Printer ribbons		Type	Qty.	Order No.
	Shrink sleeve, assembled	RIBBON MM-HS 60/300 SW	1	**2448880000**

Note

Service and support

Service and support	Our expertise for your requirements	V.2
	Benefit from optimum support when using our new products	V.4
	Online support and downloads	V.5

Our expertise for your requirements
Service connects - worldwide

Automation technology functions are becoming more complex in a globally-oriented world facing ambitious targets in terms of energy efficiency and smart production. We are your equal partners for the best connections in Industrial Connectivity. Our worldwide network of industrial managers for machine construction, process automation, energy and traffic engineering and for device manufacturers know the challenges you face and can support you in your specific applications.

Training course on technologies, applications and the detailed functionality of our products is available to you locally or at our headquarter in Germany. Our personal support can answer any questions reliably and expertly. Our online services are available 365 day a year around the clock to provide answers to your questions on our products - from user documentation through software to planning tools.

In short: Weidmüller's global service combines our expertise with your requirements.

Professional advice on planning
Our global network of industrial managers has extensive experience in automation technology and electrical connectivity. This expertise allows us to assist you with advice and planning support in order to work with you on resolving the everyday challenges of your applications.

Technology and application training
Industrial automation is moving towards smart production. It faces the challenges of new technologies and applications. Our varied range of training courses develops this knowledge further or provides more in-depth information on the handling of our products and solutions. Our seminars are modular and can be customised. We can train you and your employees in our academy, on your premises if you wish or online in our webinars at any time.

Customised installation
The challenges for the future are reducing costs and increasing efficiency. This requires intelligent, individual solutions which are tailored to your requirements. We can offer a highly qualified customer-specific production service in our application centre. Whether you need modified products, pre-assembled terminal rails or complete small cabinets: we produce the solutions developed for your application quickly and flexibly.

Online and personal support

From planning through installation to operation, we can provide exactly the right help and information for each step of your application based on our solutions and products: up-to-date, uncomplicated and comprehensive, around the clock, online or in person.

Let's connect.

Visit our website
for more information

www.weidmueller.com/service

Benefit from optimum support when using our new products

Service connects – worldwide

If our new products are used in your automation technology applications, you need the best possible individual support, from planning through installation to operation.

For every stage of your application, we can offer the right tools and information for our products and solutions. Up-to-date, uncomplicated, comprehensive and around the clock via our service portal at www.weidmueller.com/service

Fast access to our support and services is available via Weidmüller webcodes. Simply select the service you want on the right hand side, then enter the webcode made up of five digits with a preceding hashtag into the search field in the top right corner of www.weidmueller.com and it will bring up the details you need.

Online support and downloads

Exactly the right help and information on our solutions and products

From selection through to operation of our solutions and products in your application, you can access our web portal at any time, with a wide range of information material, software, product configurators and much more.

Engineering Support

As a developer, you need simple processes and system-wide tools. We support you in your development environment with comprehensive data, software tools and interfaces, product selection guides and development samples.

Engineering data

Webcode #01219

Engineering software

Webcode #11377

Produkt software

Webcode #01212

Product configurators, product selection guides and samples

Webcode #01214

Whitepaper for device connectivity

Webcode #11359

Technical data and downloads

Download all the documents and software relating to our products by simply entering the item number. You can also view our Online Catalogue and research the technical properties of our products.

Find downloads

Webcode #11379

Products in the Online Catalogue

Webcode #01217

Commercial support

Integrate our product data into your commercial sytem using standardised interfaces or familiarise yourself with the wide range of prdoducts in our technical catalogues.

Electronic catalogue in BMECat format and other formats

Webcode #11378

Technical catalogue in PDF Format

Webcode #01218

Access our Webshop

Webcode #11382

More offers in online support and downloads

Not found what you are looking for? We have even more to offer you in online support and downloads.

Approvals, certificates and declaration of conformity

Webcode #11374

Here you will find information on the CE declaration of conformity, on RoHS and REACH and other company related certificates and approvals.

All Weidmüller online services

Simply scan the QR code or visit our service portal at **www.weidmueller.com/service**

Let's connect.

There, you can find all our online support services and direct contact details for your local contact.

You can also visit our Products section, the Online Catalogue or find suitable solutions in our Industries section. If you have questions or can't find what you are looking for, please contact our personal support.

Index

Index	Index Type	X.2
	Index Order No.	X.12
	Addresses worldwide	X.22

Type	Order No.	Page
A		
ADAPTER ALU STI-S	1762440000	F.11
ADAPTER ALU STI-S	1762440000	F.13
B		
BZT 1 WS 10/5	1805490000	C.87
BZT 1 ZA WS 10/5	1805520000	C.87
BZT 2 WS 10/5	1805480000	C.87
C		
CB 1000/12.5 BLACK	7940006085	D.98
CB 120/4.5 BLACK	7940006053	D.98
CB 120/4.5 NATUR	7940006052	D.98
CB 120/7.8 BLACK	7940006063	D.98
CB 120/7.8 NATUR	7940006062	D.98
CB 135/2.5 BLACK	7940006047	D.98
CB 135/2.5 NATUR	7940006040	D.98
CB 140/3.5 BLACK	1697900000	D.98
CB 140/3.5 NATUR	1278700000	D.98
CB 160/2.6 BLACK	7940006049	D.98
CB 160/2.6 NATUR	7940006048	D.98
CB 160/4.5 BLACK	1723560000	D.98
CB 160/4.5 NATUR	1723540000	D.98
CB 178/4.8 BLACK	1723570000	D.98
CB 178/4.8 NATUR	1723550000	D.98
CB 180/7.8 BLACK	7940006065	D.98
CB 180/7.8 NATUR	7940006064	D.98
CB 200/2.6 BLACK	7940006051	D.98
CB 200/2.6 NATUR	7940006050	D.98
CB 200/3.5 BLACK	1720660000	D.98
CB 200/3.5 NATUR	1720630000	D.98
CB 200/4.8 BLACK	1697910000	D.98
CB 200/4.8 NATUR	1278800000	D.98
CB 225/12.5 BLACK	7940006077	D.98
CB 225/12.5 NATUR	7940006076	D.98
CB 240/7.8 BLACK	7940006067	D.98
CB 240/7.8 NATUR	7940006066	D.98
CB 250/4.8 BLACK	7940006055	D.98
CB 250/4.8 NATUR	7940006054	D.98
CB 290/3.5 BLACK	1720650000	D.98
CB 290/3.5 NATUR	1720640000	D.98
CB 290/4.5 BLACK	1697920000	D.98
CB 290/4.5 NATUR	1278900000	D.98
CB 300/7.8 BLACK	7940006069	D.98
CB 300/7.8 NATUR	7940006068	D.98
CB 360/4.5 BLACK	1697930000	D.98
CB 360/4.5 NATUR	1279000000	D.98
CB 365/7.5 BLACK	1697940000	D.98
CB 365/7.5 NATUR	1279100000	D.98
CB 370/3.5 BLACK	7940006057	D.98
CB 370/3.5 NATUR	7940006056	D.98
CB 390/4.8 BLACK	7940006059	D.98
CB 390/4.8 NATUR	7940006058	D.98
CB 430/4.5 BLACK	7940006061	D.98
CB 430/4.5 NATUR	7940006060	D.98
CB 450/7.5 BLACK	7940006071	D.98
CB 450/7.5 NATUR	7940006070	D.98
CB 500/12.5 BLACK	7940006079	D.98
CB 500/12.5 NATUR	7940006078	D.98
CB 540/7.5 BLACK	7940006073	D.98
CB 540/7.5 NATUR	7940006072	D.98
CB 750/7.5 BLACK	1720670000	D.98
CB 750/7.5 NATUR	1720680000	D.98
CB 780/9.0 BLACK	7940006075	D.98
CB 780/9.0 NATUR	7940006074	D.98
CB 850/12.5 NATUR	7940006082	D.98
CB 98/2.5 BLACK	1697890000	D.98
CB 98/2.5 NATUR	1278600000	D.98
CBDM 200/4.5 NA	1279300000	D.99
CBFP 43.5/10 BLACK	1859410000	D.99
CBH 19/19 BLACK	1697950000	D.99
CBH 19/19 NATUR	1289200000	D.99
CBH 27/27 NATUR	1289400000	D.99
CBH 27/27 SW	1697960000	D.99
CBH 8.1/6.2 NATUR	1279200000	D.99
CB-R 200/7.5 BLACK	1059210000	D.98
CB-R 200/7.5 NATUR	1059200000	D.98
CB-R 250/7.5 BLACK	1059230000	D.98
CB-R 250/7.5 NATUR	1059220000	D.98
CB-R 350/7.5 BLACK	1059250000	D.98
CB-R 350/7.5 NATUR	1059240000	D.98
CC 15/17 K MC NE GE	1131920000	E.37
CC 15/17 K MC NE GR	1079540000	E.37
CC 15/17 K MC NE RT	1288320000	E.37
CC 15/17 K MC NE SI	1876580000	E.37
CC 15/17 K MC NE WS	1876590000	E.37
CC 15/17 K MC SDR	1876600000	E.37
CC 15/17 MC NE GE	1131930000	E.37
CC 15/17 MC NE GR	1079530000	E.37
CC 15/17 MC NE SI	1876610000	E.37
CC 15/17 MC NE WS	1876570000	E.37
CC 15/17 MC NE WS	1876570000	E.45
CC 15/17 MC SDR	1876620000	E.37
CC 15/27 K MC NE GE	1131910000	E.37
CC 15/27 K MC NE GR	1079560000	E.37
CC 15/27 K MC NE RT	1288330000	E.37
CC 15/27 K MC NE SI	1876780000	E.37
CC 15/27 K MC NE WS	1876640000	E.37
CC 15/27 K MC SDR	1876750000	E.37
CC 15/27 MC NE GE	1131940000	E.37
CC 15/27 MC NE GR	1079550000	E.37
CC 15/27 MC NE SI	1876760000	E.37
CC 15/27 MC NE WS	1876770000	E.37
CC 15/27 MC NE WS	1876770000	E.45
CC 15/27 MC SDR	1876630000	E.37
CC 15/27 MM GE	2005630000	E.63
CC 15/27 MM GR	2005660000	E.63
CC 15/27 MM SW	2005690000	E.63
CC 15/27 MM WS	2005600000	E.63
CC 15/45 K MC NE GE	1111260000	E.38
CC 15/45 K MC NE GR	1111270000	E.38
CC 15/45 K MC NE WS	1111250000	E.38
CC 15/45 K MC SDR	1111200000	E.38
CC 15/45 MC NE GE	1111230000	E.38
CC 15/45 MC NE GR	1111240000	E.38
CC 15/45 MC NE WS	1111210000	E.38
CC 15/45 MC SDR	1111190000	E.38
CC 15/45 MM GE	2005520000	E.63
CC 15/45 MM GR	2005540000	E.63
CC 15/45 MM SW	2005570000	E.63
CC 15/45 MM WS	2005500000	E.63
CC 15/49 K MC NE GE	1131970000	E.38
CC 15/49 K MC NE GR	1079580000	E.38
CC 15/49 K MC NE RT	1288380000	E.38
CC 15/49 K MC NE SI	1877270000	E.38
CC 15/49 K MC NE WS	1877220000	E.38
CC 15/49 K MC SDR	1877230000	E.38
CC 15/49 MC NE GE	1076970000	E.38
CC 15/49 MC NE GR	1079570000	E.38
CC 15/49 MC NE SI	1877240000	E.38
CC 15/49 MC NE WS	1877260000	E.38
CC 15/49 MC NE WS	1877260000	E.45
CC 15/49 MC SDR	1877200000	E.38
CC 15/60 K MC NE GE	1131890000	E.39
CC 15/60 K MC NE GR	1072650000	E.39
CC 15/60 K MC NE RT	1288340000	E.39
CC 15/60 K MC NE SI	1877360000	E.39
CC 15/60 K MC NE WS	1877310000	E.39
CC 15/60 K MC SDR	1877320000	E.39
CC 15/60 MC NE GE	1131960000	E.39
CC 15/60 MC NE GR	1072640000	E.39
CC 15/60 MC NE SI	1877340000	E.39
CC 15/60 MC NE WS	1877350000	E.39
CC 15/60 MC NE WS	1877350000	E.45
CC 15/60 MC SDR	1877300000	E.39
CC 15/60 MM GE	2005430000	E.63
CC 15/60 MM GR	2005460000	E.63
CC 15/60 MM SW	2005480000	E.63
CC 15/60 MM WS	2005410000	E.63
CC 15/60 04MM MC NE GR	1304060000	E.39
CC 15/60 04MM MC NE SI	1059990000	E.39
CC 15/60 04MM MC NE WS	1057580000	E.39
CC 15/60 04MM MC SDR	1060010000	E.39
CC 30/60 K MC NE GE	1078320000	E.40
CC 30/60 K MC NE GR	1072680000	E.40
CC 30/60 K MC NE RT	1085430000	E.40
CC 30/60 K MC NE SI	1934330000	E.40
CC 30/60 K MC NE WS	1934390000	E.40
CC 30/60 K MC SDR	1934370000	E.40
CC 30/60 MC NE GE	1009320000	E.40
CC 30/60 MC NE GR	1072670000	E.40
CC 30/60 MC NE SI	1934400000	E.40
CC 30/60 MC NE WS	1934420000	E.40
CC 30/60 MC SDR	1934410000	E.40
CC 30/60 MM GE	2005350000	E.63
CC 30/60 MM GR	2005370000	E.63
CC 30/60 MM SW	2005390000	E.63
CC 30/60 MM WS	2005330000	E.63
CC 30/60 04MM MC NE BL	1158840000	E.40
CC 30/60 04MM MC NE GE	1083160000	E.40
CC 30/60 04MM MC NE GN	1158820000	E.40
CC 30/60 04MM MC NE GR	1083170000	E.40
CC 30/60 04MM MC NE RT	1158830000	E.40
CC 30/60 04MM MC NE WS	1083150000	E.40
CC 30/60 04MM MC SDR	1083190000	E.40
CC 85/27 K MC NE GE	1526120000	E.41
CC 85/27 K MC NE GR	1526130000	E.41
CC 85/27 K MC NE SI	2123070000	E.41
CC 85/27 K MC NE WS	1526100000	E.41
CC 85/27 K MC SDR	1526140000	E.41
CC 85/27 MC NE GE	1520940000	E.41
CC 85/27 MC NE GR	1520970000	E.41
CC 85/27 MC NE WS	1520930000	E.41
CC 85/27 MC SDR	1525850000	E.41
CC 85/54 K MC NE GE	1138440000	E.41
CC 85/54 K MC NE GR	1138450000	E.41
CC 85/54 K MC NE RT	1288390000	E.41
CC 85/54 K MC NE WS	1138430000	E.41
CC 85/54 K MC SDR	1138470000	E.41
CC 85/54 MC NE GE	1138410000	E.41
CC 85/54 MC NE GR	1138420000	E.41
CC 85/54 MC NE WS	1138400000	E.41
CC 85/54 MC SDR	1138460000	E.41
CC 85/54 MM GE	2005280000	E.63
CC 85/54 MM GR	2005290000	E.63
CC 85/54 MM SW	2005310000	E.63
CC 85/54 MM WS	2005270000	E.63
CC 85/54 04MM MC NE GE	1248490000	E.42
CC 85/54 04MM MC NE GR	1248510000	E.42
CC 85/54 04MM MC NE WS	1248480000	E.42
CC 85/54 04MM MC SDR	1248460000	E.42
CC DIA 30 K MC NE GE	2047390000	E.43
CC DIA 30 K MC NE GR	2047400000	E.43
CC DIA 30 K MC NE WS	2047380000	E.43
CC DIA 30 K MC SDR	2047560000	E.43
CC DIA 30/3.5 MC NE GE	1266130000	E.42
CC DIA 30/3.5 MC NE GR	1266140000	E.42
CC DIA 30/3.5 MC NE RT	1434110000	E.42
CC DIA 30/3.5 MC NE WS	1266120000	E.42
CC DIA 30/3.5 SDR	1266150000	E.42
CC DIA 30/4.2 MC NE GE	1248530000	E.43
CC DIA 30/4.2 MC NE GR	1248540000	E.43
CC DIA 30/4.2 MC NE WS	1248520000	E.43
CC DIA 30/4.2 MC SDR	1248470000	E.43
CC-H 15/17	1790430000	E.37
CC-H 15/27	1790410000	E.37
CC-H 15/49	1790420000	E.38
CC-H 15/60	1878910000	E.39
CC-H 30/60	1934430000	E.40
CC-M 10/30 2X2.5 AL	1483780000	E.51
CC-M 10/30 2X2.5 AL SDR	1505140000	E.51
CC-M 10/30 2X2.5 ST	1500150000	E.51
CC-M 10/30 2X2.5 ST SDR	1505150000	E.51
CC-M 15/45 2X3 AL	1327900000	E.53
CC-M 15/45 2X3 AL SDR	1474310000	E.53
CC-M 15/45 2X3 ST	1327920000	E.53
CC-M 15/45 2X3 ST SDR	1474320000	E.53
CC-M 15/45 AL	1327730000	E.52
CC-M 15/45 AL SDR	1474280000	E.52
CC-M 15/45 ST	1327740000	E.52
CC-M 15/45 ST SDR	1474290000	E.52
CC-M 15/60 2X3 AL	1327880000	E.56
CC-M 15/60 2X3 AL SDR	1474260000	E.56
CC-M 15/60 2X3 ST	1327890000	E.56
CC-M 15/60 2X3 ST SDR	1474270000	E.56
CC-M 15/60 AL	1327700000	E.56
CC-M 15/60 AL SDR	1474240000	E.56
CC-M 15/60 ST	1327720000	E.56
CC-M 15/60 ST SDR	1474250000	E.56
CC-M 18/52 2X3 AL	1390400000	E.54
CC-M 18/52 2X3 AL SDR	1505360000	E.54
CC-M 18/52 2X3 ST	1505350000	E.54
CC-M 18/52 2X3 ST SDR	1505370000	E.54
CC-M 27/18 2X3 AL	1463870000	E.49
CC-M 27/18 2X3 AL SDR	1474130000	E.49
CC-M 27/18 2X3 ST	1463880000	E.49
CC-M 27/18 2X3 ST SDR	1474140000	E.49
CC-M 27/18 AL	1327630000	E.49
CC-M 27/18 AL SDR	1474110000	E.49
CC-M 27/18 ST	1327640000	E.49
CC-M 27/18 ST SDR	1474120000	E.49
CC-M 27/70 2X3 AL	1500170000	E.58
CC-M 27/70 2X3 AL SDR	1505160000	E.58
CC-M 27/70 2X3 ST	1500190000	E.58
CC-M 27/70 2X3 ST SDR	1505170000	E.58
CC-M 30/60 2X3 AL	1327850000	E.57
CC-M 30/60 2X3 AL SDR	1474220000	E.57
CC-M 30/60 2X3 ST	1327870000	E.57
CC-M 30/60 2X3 ST SDR	1474230000	E.57
CC-M 30/60 AL	1327680000	E.57
CC-M 30/60 AL SDR	1474190000	E.57
CC-M 30/60 ST	1327690000	E.57
CC-M 30/60 ST SDR	1474210000	E.57
CC-M 43/70 AL	1500200000	E.58
CC-M 43/70 AL SDR	1505180000	E.58
CC-M 43/70 ST	1500220000	E.58
CC-M 43/70 ST SDR	1505190000	E.58
CC-M 58/35 2X3 AL	1415710000	E.52
CC-M 58/35 2X3 AL SDR	1474350000	E.52
CC-M 58/35 2X3 ST	1415670000	E.52
CC-M 58/35 2X3 ST SDR	1474360000	E.52
CC-M 58/35 AL	1415750000	E.51
CC-M 58/35 AL SDR	1474330000	E.51
CC-M 58/35 ST	1415730000	E.51
CC-M 58/35 ST SDR	1474340000	E.51
CC-M 70/48 2X3 AL	1415720000	E.54
CC-M 70/48 2X3 AL SDR	1474390000	E.54
CC-M 70/48 2X3 ST	1415680000	E.54
CC-M 70/48 2X3 ST SDR	1474400000	E.54
CC-M 70/48 AL	1415770000	E.53
CC-M 70/48 AL SDR	1474370000	E.53
CC-M 70/48 ST	1415740000	E.53
CC-M 70/48 ST SDR	1474380000	E.53
CC-M 85/27 2X3 AL	1327830000	E.50
CC-M 85/27 2X3 AL SDR	1474170000	E.50
CC-M 85/27 2X3 ST	1327840000	E.50
CC-M 85/27 2X3 ST SDR	1474180000	E.50
CC-M 85/27 AL	1327650000	E.50
CC-M 85/27 AL SDR	1474150000	E.50
CC-M 85/27 ST	1327670000	E.50
CC-M 85/27 ST SDR	1474160000	E.50
CC-M 85/54 4X3 AL	1327800000	E.55
CC-M 85/54 4X3 AL SDR	1474080000	E.55
CC-M 85/54 4X3 ST	1327820000	E.55
CC-M 85/54 4X3 ST SDR	1474090000	E.55
CC-M 85/54 AL	1327600000	E.55
CC-M 85/54 AL SDR	1474070000	E.55
CC-M 85/54 ST	1327620000	E.55
CC-M 85/54 ST SDR	1474060000	E.55
CC-M DIA 30 AL	1327750000	E.59
CC-M DIA 30 AL SDR	1474410000	E.59
CC-M DIA 30 ST	1327770000	E.59
CC-M DIA 30 ST SDR	1474420000	E.59
CC-RAIL 1000	1790150000	E.45
CC-RAIL TRANSPARENT1000	1790160000	E.45
CLI C 02-12 SDR SG	1873330000	D.49
CLI C 02-15 SDR SG	0252509999	D.49
CLI C 02-18 GE NE SG	1873741687	D.47
CLI C 02-18 SDR SG	1873749999	D.49
CLI C 02-21 SDR SG	1873340000	D.49
CLI C 02-24 SDR SG	1912500000	D.49
CLI C 02-27 SDR SG	1912510000	D.49
CLI C 02-3 BL/SW - CD	1568241741	D.54
CLI C 02-3 BL/SW - MP	0252111741	D.52
CLI C 02-3 BL/SW 6 CD	1568241521	D.53
CLI C 02-3 BL/SW 6 MP	0252111521	D.51
CLI C 02-3 BR/WS 1 CD	1568241506	D.53
CLI C 02-3 BR/WS 1 MP	0252111506	D.51
CLI C 02-3 GE NE CD	1568241058	D.47
CLI C 02-3 GE NE MP	0213811687	D.47
CLI C 02-3 GE/SW / MP	0252111742	D.52
CLI C 02-3 GE/SW - CD	1568241740	D.54
CLI C 02-3 GE/SW - MP	0252111740	D.52
CLI C 02-3 GE/SW . CD	1568241748	D.54
CLI C 02-3 GE/SW . MP	0252111748	D.52
CLI C 02-3 GE/SW / CD	1568241742	D.54
CLI C 02-3 GE/SW : CD	1568241750	D.54
CLI C 02-3 GE/SW : MP	0252111750	D.52
CLI C 02-3 GE/SW + CD	1568241738	D.54
CLI C 02-3 GE/SW + MP	0252111738	D.52
CLI C 02-3 GE/SW = CD	1568241751	D.54
CLI C 02-3 GE/SW = MP	0252111751	D.52
CLI C 02-3 GE/SW 0 CD	1568241502	D.53
CLI C 02-3 GE/SW 1 CD	1568241505	D.53
CLI C 02-3 GE/SW 2 CD	1568241508	D.53
CLI C 02-3 GE/SW 3 CD	1568241511	D.53
CLI C 02-3 GE/SW 4 CD	1568241514	D.53
CLI C 02-3 GE/SW 4 CD	1568241514	D.53
CLI C 02-3 GE/SW 4 MP	0252111514	D.51
CLI C 02-3 GE/SW 5 CD	1568241517	D.53
CLI C 02-3 GE/SW 6 CD	1568241520	D.53
CLI C 02-3 GE/SW 7 CD	1568241523	D.53
CLI C 02-3 GE/SW 8 CD	1568241526	D.53
CLI C 02-3 GE/SW 9 CD	1568241529	D.53
CLI C 02-3 GE/SW A CD	1568241637	D.54
CLI C 02-3 GE/SW Ä CD	1568241056	D.54
CLI C 02-3 GE/SW Å CD	1568241055	D.54
CLI C 02-3 GE/SW A MP	0252111637	D.52
CLI C 02-3 GE/SW Ä MP	0252111697	D.52
CLI C 02-3 GE/SW Å MP	0252111699	D.52
CLI C 02-3 GE/SW AC CD	1568241752	D.54
CLI C 02-3 GE/SW AC MP	0252111752	D.52
CLI C 02-3 GE/SW Æ CD	1568241735	D.52
CLI C 02-3 GE/SW B CD	1568241639	D.54
CLI C 02-3 GE/SW B MP	0252111639	D.52
CLI C 02-3 GE/SW C CD	1568241641	D.54
CLI C 02-3 GE/SW C MP	0252111641	D.52
CLI C 02-3 GE/SW D CD	1568241643	D.54
CLI C 02-3 GE/SW D MP	0252111643	D.52
CLI C 02-3 GE/SW E CD	1568241645	D.54
CLI C 02-3 GE/SW E MP	0252111645	D.52
CLI C 02-3 GE/SW ET CD	1568241746	D.54
CLI C 02-3 GE/SW ET MP	0252111746	D.52
CLI C 02-3 GE/SW F CD	1568241647	D.54
CLI C 02-3 GE/SW F MP	0252111647	D.52
CLI C 02-3 GE/SW G CD	1568241649	D.54
CLI C 02-3 GE/SW G MP	0252111649	D.52
CLI C 02-3 GE/SW H CD	1568241651	D.54
CLI C 02-3 GE/SW H MP	0252111651	D.52
CLI C 02-3 GE/SW I CD	1568241653	D.54
CLI C 02-3 GE/SW I MP	0252111653	D.52
CLI C 02-3 GE/SW J CD	1568241655	D.54
CLI C 02-3 GE/SW J MP	0252111655	D.52
CLI C 02-3 GE/SW K CD	1568241657	D.54
CLI C 02-3 GE/SW K MP	0252111657	D.52
CLI C 02-3 GE/SW L CD	1568241659	D.54
CLI C 02-3 GE/SW L MP	0252111659	D.52
CLI C 02-3 GE/SW M CD	1568241661	D.54
CLI C 02-3 GE/SW M MP	0252111661	D.52
CLI C 02-3 GE/SW N CD	1568241663	D.54
CLI C 02-3 GE/SW N MP	0252111663	D.52
CLI C 02-3 GE/SW O CD	1568241665	D.54
CLI C 02-3 GE/SW Ö CD	1568241057	D.54
CLI C 02-3 GE/SW Ø CD	1568241736	D.52
CLI C 02-3 GE/SW O MP	0252111665	D.52
CLI C 02-3 GE/SW Ö MP	0252111695	D.52
CLI C 02-3 GE/SW P CD	1568241667	D.54
CLI C 02-3 GE/SW P MP	0252111667	D.52
CLI C 02-3 GE/SW PET. CD	1568241747	D.54
CLI C 02-3 GE/SW Q CD	1568241669	D.54
CLI C 02-3 GE/SW Q MP	0252111669	D.52
CLI C 02-3 GE/SW R CD	1568241671	D.54
CLI C 02-3 GE/SW R MP	0252111671	D.52

Type	Order No.	Page
CLI C 02-3 GE/SW S CD	1568241673	D.54
CLI C 02-3 GE/SW S MP	0252111673	D.52
CLI C 02-3 GE/SW T CD	1568241676	D.54
CLI C 02-3 GE/SW T MP	0252111676	D.52
CLI C 02-3 GE/SW U CD	1568241679	D.54
CLI C 02-3 GE/SW U MP	0252111679	D.52
CLI C 02-3 GE/SW V CD	1568241681	D.54
CLI C 02-3 GE/SW V MP	0252111681	D.52
CLI C 02-3 GE/SW W CD	1568241683	D.54
CLI C 02-3 GE/SW W MP	0252111683	D.52
CLI C 02-3 GE/SW X CD	1568241687	D.54
CLI C 02-3 GE/SW X MP	0252111687	D.52
CLI C 02-3 GE/SW Y CD	1568241696	D.54
CLI C 02-3 GE/SW Y MP	0252111696	D.52
CLI C 02-3 GE/SW Z CD	1568241698	D.54
CLI C 02-3 GE/SW Z MP	0252111698	D.52
CLI C 02-3 GN/SW 5 CD	1568241518	D.53
CLI C 02-3 GN/SW 5 MP	0252111518	D.51
CLI C 02-3 GR/SW 8 CD	1568241527	D.53
CLI C 02-3 GR/SW 8 MP	0252111527	D.51
CLI C 02-3 OR/SW 3 CD	1568241512	D.53
CLI C 02-3 OR/SW 3 MP	0252111512	D.51
CLI C 02-3 RT/SW + CD	1568241737	D.54
CLI C 02-3 RT/SW + MP	0252111737	D.52
CLI C 02-3 RT/SW 2 CD	1568241509	D.53
CLI C 02-3 RT/SW 2 MP	0252111509	D.51
CLI C 02-3 SDR CD	1568249999	D.49
CLI C 02-3 SDR SG	1912550000	D.49
CLI C 02-3 SW/WS 0 CD	1568241503	D.53
CLI C 02-3 SW/WS 0 MP	0252111503	D.51
CLI C 02-3 VI/SW 7 CD	1568241524	D.53
CLI C 02-3 VI/SW 7 MP	0252111524	D.51
CLI C 02-3 WS/SW - CD	1869821740	D.54
CLI C 02-3 WS/SW 0 CD	1869821502	D.53
CLI C 02-3 WS/SW 1 CD	1869821505	D.53
CLI C 02-3 WS/SW 2 CD	1869821508	D.53
CLI C 02-3 WS/SW 3 CD	1869821511	D.53
CLI C 02-3 WS/SW 4 CD	1869821514	D.53
CLI C 02-3 WS/SW 5 CD	1869821517	D.53
CLI C 02-3 WS/SW 6 CD	1869821520	D.53
CLI C 02-3 WS/SW 7 CD	1869821523	D.53
CLI C 02-3 WS/SW 8 CD	1869821526	D.53
CLI C 02-3 WS/SW 9 CD	1568241530	D.53
CLI C 02-3 WS/SW 9 CD	1568241530	D.53
CLI C 02-3 WS/SW 9 MP	0252111530	D.51
CLI C 02-30 SDR SG	1912580000	D.49
CLI C 02-33 SDR SG	1912590000	D.49
CLI C 02-36 SDR SG	1912600000	D.49
CLI C 02-39 SDR SG	1912610000	D.49
CLI C 02-6 GE/SW A1 CD	1568241726	D.55
CLI C 02-6 GE/SW A1 MP	0252111726	D.55
CLI C 02-6 GE/SW A2 CD	1568241727	D.55
CLI C 02-6 GE/SW A2 MP	0252111727	D.55
CLI C 02-6 GE/SW L1 CD	1568241728	D.55
CLI C 02-6 GE/SW L1 MP	0252111728	D.55
CLI C 02-6 GE/SW L2 CD	1568241729	D.55
CLI C 02-6 GE/SW L2 MP	0252111729	D.55
CLI C 02-6 GE/SW L3 CD	1568241730	D.55
CLI C 02-6 GE/SW L3 MP	0252111730	D.55
CLI C 02-6 SDR CD	1869999999	D.49
CLI C 02-9 GE/SW PEN CD	1568241734	D.55
CLI C 02-9 GE/SW PEN MP	0252111734	D.55
CLI C 02-9 SDR CD	1899290000	D.49
CLI C 1-12 SDR SG	1873350000	D.50
CLI C 1-15 SDR SG	1873360000	D.50
CLI C 1-18 GE NE SG	1871801687	D.48
CLI C 1-18 SDR SG	1871809999	D.50
CLI C 1-21 SDR SG	1873370000	D.50
CLI C 1-27 SDR SG	1912640000	D.50
CLI C 1-3 BL NE CD	1568251693	D.48
CLI C 1-3 BL/SW - CD	1568251741	D.60
CLI C 1-3 BL/SW - MP	0252611741	D.57
CLI C 1-3 BL/SW 6 CD	1568251521	D.58
CLI C 1-3 BL/SW 6 MP	0252611521	D.56
CLI C 1-3 BL/SW N CD	1568251664	D.60
CLI C 1-3 BL/SW N MP	0252611664	D.57
CLI C 1-3 BR/WS 1 CD	1568251506	D.58
CLI C 1-3 BR/WS 1 MP	0252611506	D.56
CLI C 1-3 GE NE CD	1568251699	D.48
CLI C 1-3 GE NE MP	0171111687	D.47
CLI C 1-3 GE/SW - CD	1568251740	D.60
CLI C 1-3 GE/SW - MP	0252611740	D.57
CLI C 1-3 GE/SW * CD	1568251753	D.60
CLI C 1-3 GE/SW . CD	1568251748	D.60
CLI C 1-3 GE/SW . MP	0252611748	D.57
CLI C 1-3 GE/SW / CD	1568251742	D.60
CLI C 1-3 GE/SW / MP	0252611742	D.57
CLI C 1-3 GE/SW : CD	1568251750	D.60
CLI C 1-3 GE/SW : MP	0252611750	D.57
CLI C 1-3 GE/SW + CD	1568251738	D.60
CLI C 1-3 GE/SW + MP	0252611738	D.57
CLI C 1-3 GE/SW = CD	1568251751	D.60
CLI C 1-3 GE/SW = MP	0252611751	D.57
CLI C 1-3 GE/SW 0 CD	1568251502	D.58
CLI C 1-3 GE/SW 0 MP	0252611502	D.56
CLI C 1-3 GE/SW 1 CD	1568251505	D.58
CLI C 1-3 GE/SW 1 MP	0252611505	D.56
CLI C 1-3 GE/SW 2 CD	1568251508	D.58
CLI C 1-3 GE/SW 2 MP	0252611508	D.56
CLI C 1-3 GE/SW 3 CD	1568251511	D.58
CLI C 1-3 GE/SW 3 MP	0252611511	D.56
CLI C 1-3 GE/SW 4 CD	1568251514	D.58
CLI C 1-3 GE/SW 4 CD	1568251514	D.58
CLI C 1-3 GE/SW 4 MP	0252611514	D.56
CLI C 1-3 GE/SW 4 MP	0252611514	D.56
CLI C 1-3 GE/SW 5 CD	1568251517	D.58
CLI C 1-3 GE/SW 5 MP	0252611517	D.56
CLI C 1-3 GE/SW 6 CD	1568251520	D.58
CLI C 1-3 GE/SW 6 MP	0252611520	D.56
CLI C 1-3 GE/SW 7 CD	1568251523	D.58
CLI C 1-3 GE/SW 7 MP	0252611523	D.56
CLI C 1-3 GE/SW 8 CD	1568251526	D.58
CLI C 1-3 GE/SW 8 MP	0252611526	D.56
CLI C 1-3 GE/SW 9 CD	1568251529	D.58
CLI C 1-3 GE/SW 9 MP	0252611529	D.56
CLI C 1-3 GE/SW A CD	1568251637	D.59
CLI C 1-3 GE/SW Ä CD	1568251797	D.60
CLI C 1-3 GE/SW Å CD	1568251799	D.60
CLI C 1-3 GE/SW A MP	0252611637	D.57
CLI C 1-3 GE/SW Ä MP	0252611697	D.57
CLI C 1-3 GE/SW Å MP	0252611699	D.57
CLI C 1-3 GE/SW AC CD	1568251752	D.60
CLI C 1-3 GE/SW AC MP	0252611752	D.57
CLI C 1-3 GE/SW Æ CD	1568251735	D.60
CLI C 1-3 GE/SW B CD	1568251639	D.59
CLI C 1-3 GE/SW B MP	0252611639	D.57
CLI C 1-3 GE/SW C CD	1568251641	D.59
CLI C 1-3 GE/SW C MP	0252611641	D.57
CLI C 1-3 GE/SW D CD	1568251643	D.59
CLI C 1-3 GE/SW D MP	0252611643	D.57
CLI C 1-3 GE/SW E CD	1568251645	D.59
CLI C 1-3 GE/SW E MP	0252611645	D.57
CLI C 1-3 GE/SW ET CD	1568251746	D.60
CLI C 1-3 GE/SW ET MP	0252611746	D.57
CLI C 1-3 GE/SW F CD	1568251647	D.59
CLI C 1-3 GE/SW F MP	0252611647	D.57
CLI C 1-3 GE/SW G CD	1568251649	D.59
CLI C 1-3 GE/SW G MP	0252611649	D.57
CLI C 1-3 GE/SW H CD	1568251651	D.59
CLI C 1-3 GE/SW H MP	0252611651	D.57
CLI C 1-3 GE/SW I CD	1568251653	D.59
CLI C 1-3 GE/SW I MP	0252611653	D.57
CLI C 1-3 GE/SW J CD	1568251655	D.59
CLI C 1-3 GE/SW J MP	0252611655	D.57
CLI C 1-3 GE/SW K CD	1568251657	D.59
CLI C 1-3 GE/SW K MP	0252611657	D.57
CLI C 1-3 GE/SW L CD	1568251659	D.59
CLI C 1-3 GE/SW L MP	0252611659	D.57
CLI C 1-3 GE/SW M CD	1568251661	D.59
CLI C 1-3 GE/SW M MP	0252611661	D.57
CLI C 1-3 GE/SW N CD	1568251663	D.59
CLI C 1-3 GE/SW N MP	0252611663	D.57
CLI C 1-3 GE/SW O CD	1568251665	D.59
CLI C 1-3 GE/SW Ö CD	1568251795	D.60
CLI C 1-3 GE/SW Ø CD	1568251736	D.60
CLI C 1-3 GE/SW O MP	0252611665	D.57
CLI C 1-3 GE/SW Ö MP	0252611695	D.57
CLI C 1-3 GE/SW P CD	1568251667	D.59
CLI C 1-3 GE/SW P MP	0252611667	D.57
CLI C 1-3 GE/SW PET. CD	1568251747	D.60
CLI C 1-3 GE/SW PET. MP	0252611747	D.57
CLI C 1-3 GE/SW Q CD	1568251669	D.59
CLI C 1-3 GE/SW Q MP	0252611669	D.57
CLI C 1-3 GE/SW R CD	1568251671	D.59
CLI C 1-3 GE/SW R MP	0252611671	D.57
CLI C 1-3 GE/SW S CD	1568251673	D.59
CLI C 1-3 GE/SW S MP	0252611673	D.57
CLI C 1-3 GE/SW T CD	1568251676	D.59
CLI C 1-3 GE/SW T MP	0252611676	D.57
CLI C 1-3 GE/SW U CD	1568251679	D.59
CLI C 1-3 GE/SW U MP	0252611679	D.57
CLI C 1-3 GE/SW V CD	1568251681	D.59
CLI C 1-3 GE/SW V MP	0252611681	D.57
CLI C 1-3 GE/SW W CD	1568251683	D.59
CLI C 1-3 GE/SW W MP	0252611683	D.57
CLI C 1-3 GE/SW X CD	1568251687	D.59
CLI C 1-3 GE/SW X MP	0252611687	D.57
CLI C 1-3 GE/SW Y CD	1568251696	D.59
CLI C 1-3 GE/SW Y MP	0252611696	D.57
CLI C 1-3 GE/SW Z CD	1568251698	D.59
CLI C 1-3 GE/SW Z MP	0252611698	D.57
CLI C 1-3 GN NE CD	1568251688	D.48
CLI C 1-3 GN/SW 5 CD	1568251518	D.58
CLI C 1-3 GN/SW 5 MP	0252611518	D.56
CLI C 1-3 GR NE CD	1568251691	D.48
CLI C 1-3 GR/SW 8 CD	1568251527	D.58
CLI C 1-3 GR/SW 8 MP	0252611527	D.56
CLI C 1-3 OR/SW 3 CD	1568251512	D.58
CLI C 1-3 OR/SW 3 MP	0252611512	D.56
CLI C 1-3 RT NE CD	1568251686	D.48
CLI C 1-3 RT/SW + CD	1568251737	D.60
CLI C 1-3 RT/SW + MP	0252611737	D.57
CLI C 1-3 RT/SW 2 CD	1568251509	D.58
CLI C 1-3 RT/SW 2 MP	0252611509	D.56
CLI C 1-3 SDR CD	1568259999	D.49
CLI C 1-3 SDR SG	1912650000	D.50
CLI C 1-3 SW NE CD	1568251694	D.48
CLI C 1-3 SW/WS 0 CD	1568251503	D.58
CLI C 1-3 SW/WS 0 MP	0252611503	D.56
CLI C 1-3 VI/SW 7 CD	1568251524	D.58
CLI C 1-3 VI/SW 7 MP	0252611524	D.56
CLI C 1-3 WS NE CD	1568251044	D.48
CLI C 1-3 WS/SW - CD	1568251049	D.60
CLI C 1-3 WS/SW . CD	1568251047	D.60
CLI C 1-3 WS/SW / CD	1568251050	D.60
CLI C 1-3 WS/SW : CD	1568251051	D.60
CLI C 1-3 WS/SW ? CD	1568251055	D.60
CLI C 1-3 WS/SW + CD	1568251048	D.60
CLI C 1-3 WS/SW = CD	1568251052	D.60
CLI C 1-3 WS/SW 0 CD	1568251000	D.58
CLI C 1-3 WS/SW 1 CD	1568250001	D.58
CLI C 1-3 WS/SW 2 CD	1568250002	D.58
CLI C 1-3 WS/SW 3 CD	1568250003	D.58
CLI C 1-3 WS/SW 4 CD	1568250004	D.58
CLI C 1-3 WS/SW 5 CD	1568250005	D.58
CLI C 1-3 WS/SW 6 CD	1568250006	D.58
CLI C 1-3 WS/SW 7 CD	1568250007	D.58
CLI C 1-3 WS/SW 8 CD	1568250008	D.58
CLI C 1-3 WS/SW 9 CD	1568251530	D.58
CLI C 1-3 WS/SW 9 CD	1568251530	D.58
CLI C 1-3 WS/SW 9 MP	0252611530	D.56
CLI C 1-3 WS/SW A CD	1568251021	D.59
CLI C 1-3 WS/SW B CD	1568251022	D.59
CLI C 1-3 WS/SW C CD	1568251023	D.59
CLI C 1-3 WS/SW D CD	1568251024	D.59
CLI C 1-3 WS/SW E CD	1568251025	D.59
CLI C 1-3 WS/SW ET CD	1568251053	D.60
CLI C 1-3 WS/SW F CD	1568251026	D.59
CLI C 1-3 WS/SW G CD	1568251027	D.59
CLI C 1-3 WS/SW H CD	1568251028	D.59
CLI C 1-3 WS/SW I CD	1568251029	D.59
CLI C 1-3 WS/SW J CD	1568251030	D.59
CLI C 1-3 WS/SW K CD	1568251031	D.59
CLI C 1-3 WS/SW L CD	1568251032	D.59
CLI C 1-3 WS/SW M CD	1568251033	D.59
CLI C 1-3 WS/SW N CD	1568251034	D.59
CLI C 1-3 WS/SW O CD	1568251035	D.59
CLI C 1-3 WS/SW Ö CD	1568251057	D.60
CLI C 1-3 WS/SW P CD	1568251036	D.59
CLI C 1-3 WS/SW PET. CD	1568251058	D.60
CLI C 1-3 WS/SW Q CD	1568251037	D.59
CLI C 1-3 WS/SW R CD	1568251038	D.59
CLI C 1-3 WS/SW S CD	1568251039	D.59
CLI C 1-3 WS/SW T CD	1568251040	D.59
CLI C 1-3 WS/SW U CD	1568251041	D.59
CLI C 1-3 WS/SW V CD	1568251042	D.59
CLI C 1-3 WS/SW W CD	1568251043	D.59
CLI C 1-3 WS/SW X CD	1568251054	D.59
CLI C 1-3 WS/SW Y CD	1568251045	D.59
CLI C 1-3 WS/SW Z CD	1568251046	D.59
CLI C 1-30 SDR SG	1912660000	D.50
CLI C 1-33 SDR SG	1912670000	D.50
CLI C 1-39 SDR SG	1912680000	D.50
CLI C 1-6 GE NE CD	1868811687	D.48
CLI C 1-6 GE/SW 01 CD	1868811522	D.63
CLI C 1-6 GE/SW 01 MP	0252711522	D.61
CLI C 1-6 GE/SW 02 CD	1868811523	D.63
CLI C 1-6 GE/SW 02 MP	0252711523	D.61
CLI C 1-6 GE/SW 03 CD	1868811524	D.63
CLI C 1-6 GE/SW 03 MP	0252711524	D.61
CLI C 1-6 GE/SW 04 CD	1868811525	D.63
CLI C 1-6 GE/SW 04 MP	0252711525	D.61
CLI C 1-6 GE/SW 05 CD	1868811526	D.63
CLI C 1-6 GE/SW 05 MP	0252711526	D.61
CLI C 1-6 GE/SW 06 CD	1868811527	D.63
CLI C 1-6 GE/SW 06 MP	0252711527	D.61
CLI C 1-6 GE/SW 07 CD	1868811528	D.63
CLI C 1-6 GE/SW 07 MP	0252711528	D.61
CLI C 1-6 GE/SW 08 CD	1868811529	D.63
CLI C 1-6 GE/SW 08 MP	0252711529	D.61
CLI C 1-6 GE/SW 09 CD	1868811530	D.63
CLI C 1-6 GE/SW 09 MP	0252711530	D.61
CLI C 1-6 GE/SW 10 CD	1868811531	D.63
CLI C 1-6 GE/SW 10 MP	0252711531	D.61
CLI C 1-6 GE/SW 11 CD	1868811532	D.63
CLI C 1-6 GE/SW 11 MP	0252711532	D.61
CLI C 1-6 GE/SW 12 CD	1868811533	D.63
CLI C 1-6 GE/SW 12 MP	0252711533	D.61
CLI C 1-6 GE/SW 13 CD	1868811534	D.63
CLI C 1-6 GE/SW 13 MP	0252711534	D.61
CLI C 1-6 GE/SW 14 CD	1868811535	D.63
CLI C 1-6 GE/SW 14 MP	0252711535	D.61
CLI C 1-6 GE/SW 15 CD	1868811536	D.63
CLI C 1-6 GE/SW 15 MP	0252711536	D.61
CLI C 1-6 GE/SW 16 CD	1868811537	D.63
CLI C 1-6 GE/SW 16 MP	0252711537	D.61
CLI C 1-6 GE/SW 17 CD	1868811538	D.63
CLI C 1-6 GE/SW 17 MP	0252711538	D.61
CLI C 1-6 GE/SW 18 CD	1868811539	D.63
CLI C 1-6 GE/SW 18 MP	0252711539	D.61
CLI C 1-6 GE/SW 19 CD	1868811540	D.63
CLI C 1-6 GE/SW 19 MP	0252711540	D.61
CLI C 1-6 GE/SW 20 CD	1868811541	D.63
CLI C 1-6 GE/SW 20 MP	0252711541	D.61
CLI C 1-6 GE/SW 21 CD	1868811542	D.63
CLI C 1-6 GE/SW 21 MP	0252711542	D.61
CLI C 1-6 GE/SW 22 CD	1868811543	D.63
CLI C 1-6 GE/SW 22 MP	0252711543	D.61
CLI C 1-6 GE/SW 23 CD	1868811544	D.63
CLI C 1-6 GE/SW 23 MP	0252711544	D.61
CLI C 1-6 GE/SW 24 CD	1868811545	D.63
CLI C 1-6 GE/SW 24 MP	0252711545	D.61
CLI C 1-6 GE/SW 25 CD	1868811546	D.63
CLI C 1-6 GE/SW 25 MP	0252711546	D.61
CLI C 1-6 GE/SW 26 CD	1868811547	D.63
CLI C 1-6 GE/SW 26 MP	0252711547	D.61
CLI C 1-6 GE/SW 27 CD	1868811548	D.63
CLI C 1-6 GE/SW 27 MP	0252711548	D.61
CLI C 1-6 GE/SW 28 CD	1868811549	D.63
CLI C 1-6 GE/SW 28 MP	0252711549	D.61
CLI C 1-6 GE/SW 29 CD	1868811550	D.63
CLI C 1-6 GE/SW 29 MP	0252711550	D.61
CLI C 1-6 GE/SW 30 CD	1868811551	D.63
CLI C 1-6 GE/SW 30 MP	0252711551	D.61
CLI C 1-6 GE/SW 31 CD	1868811552	D.63
CLI C 1-6 GE/SW 31 MP	0252711552	D.61
CLI C 1-6 GE/SW 32 CD	1868811553	D.63
CLI C 1-6 GE/SW 32 MP	0252711553	D.61
CLI C 1-6 GE/SW 33 CD	1868811554	D.63
CLI C 1-6 GE/SW 33 MP	0252711554	D.61
CLI C 1-6 GE/SW 34 CD	1868811555	D.63
CLI C 1-6 GE/SW 34 MP	0252711555	D.61
CLI C 1-6 GE/SW 35 CD	1868811556	D.63
CLI C 1-6 GE/SW 35 MP	0252711556	D.61
CLI C 1-6 GE/SW 36 CD	1868811557	D.63
CLI C 1-6 GE/SW 36 MP	0252711557	D.61
CLI C 1-6 GE/SW 37 CD	1868811558	D.63
CLI C 1-6 GE/SW 37 MP	0252711558	D.61
CLI C 1-6 GE/SW 38 CD	1868811559	D.63
CLI C 1-6 GE/SW 38 MP	0252711559	D.61
CLI C 1-6 GE/SW 39 CD	1868811560	D.63
CLI C 1-6 GE/SW 39 MP	0252711560	D.61
CLI C 1-6 GE/SW 40 CD	1868811561	D.63
CLI C 1-6 GE/SW 40 MP	0252711561	D.61
CLI C 1-6 GE/SW 41 CD	1868811562	D.63
CLI C 1-6 GE/SW 41 MP	0252711562	D.61
CLI C 1-6 GE/SW 42 CD	1868811563	D.63
CLI C 1-6 GE/SW 42 MP	0252711563	D.61
CLI C 1-6 GE/SW 43 CD	1868811564	D.63
CLI C 1-6 GE/SW 43 MP	0252711564	D.61
CLI C 1-6 GE/SW 44 CD	1868811565	D.63
CLI C 1-6 GE/SW 44 MP	0252711565	D.61
CLI C 1-6 GE/SW 45 CD	1868811566	D.63
CLI C 1-6 GE/SW 45 MP	0252711566	D.61
CLI C 1-6 GE/SW 46 CD	1868811567	D.63
CLI C 1-6 GE/SW 46 MP	0252711567	D.61
CLI C 1-6 GE/SW 47 CD	1868811568	D.63
CLI C 1-6 GE/SW 47 MP	0252711568	D.61
CLI C 1-6 GE/SW 48 CD	1868811569	D.63
CLI C 1-6 GE/SW 48 MP	0252711569	D.61
CLI C 1-6 GE/SW 49 CD	1868811570	D.63
CLI C 1-6 GE/SW 49 MP	0252711570	D.61
CLI C 1-6 GE/SW 50 CD	1868811571	D.63
CLI C 1-6 GE/SW 50 MP	0252711571	D.61
CLI C 1-6 GE/SW 51 CD	1868811572	D.64
CLI C 1-6 GE/SW 51 MP	0252711572	D.61
CLI C 1-6 GE/SW 52 CD	1868811573	D.64
CLI C 1-6 GE/SW 52 MP	0252711573	D.61
CLI C 1-6 GE/SW 53 CD	1868811574	D.64
CLI C 1-6 GE/SW 53 MP	0252711574	D.61
CLI C 1-6 GE/SW 54 CD	1868811575	D.64
CLI C 1-6 GE/SW 54 MP	0252711575	D.61
CLI C 1-6 GE/SW 55 CD	1868811576	D.64
CLI C 1-6 GE/SW 55 MP	0252711576	D.61
CLI C 1-6 GE/SW 56 CD	1868811577	D.64
CLI C 1-6 GE/SW 56 MP	0252711577	D.61
CLI C 1-6 GE/SW 57 CD	1868811578	D.64
CLI C 1-6 GE/SW 57 MP	0252711578	D.61
CLI C 1-6 GE/SW 58 CD	1868811579	D.64
CLI C 1-6 GE/SW 58 MP	0252711579	D.61
CLI C 1-6 GE/SW 59 CD	1868811580	D.64
CLI C 1-6 GE/SW 59 MP	0252711580	D.61
CLI C 1-6 GE/SW 60 CD	1868811581	D.64
CLI C 1-6 GE/SW 60 MP	0252711581	D.61
CLI C 1-6 GE/SW 61 CD	1868811582	D.64
CLI C 1-6 GE/SW 61 MP	0252711582	D.62
CLI C 1-6 GE/SW 62 CD	1868811583	D.64
CLI C 1-6 GE/SW 62 MP	0252711583	D.62
CLI C 1-6 GE/SW 63 CD	1868811584	D.64
CLI C 1-6 GE/SW 63 MP	0252711584	D.62
CLI C 1-6 GE/SW 64 CD	1868811585	D.64
CLI C 1-6 GE/SW 64 MP	0252711585	D.62
CLI C 1-6 GE/SW 65 CD	1868811586	D.64
CLI C 1-6 GE/SW 65 MP	0252711586	D.62
CLI C 1-6 GE/SW 66 CD	1868811587	D.64
CLI C 1-6 GE/SW 66 MP	0252711587	D.62
CLI C 1-6 GE/SW 67 CD	1868811588	D.64
CLI C 1-6 GE/SW 67 MP	0252711588	D.62
CLI C 1-6 GE/SW 68 CD	1868811589	D.64
CLI C 1-6 GE/SW 68 MP	0252711589	D.62
CLI C 1-6 GE/SW 69 CD	1868811590	D.64
CLI C 1-6 GE/SW 69 MP	0252711590	D.62
CLI C 1-6 GE/SW 70 CD	1868811591	D.64
CLI C 1-6 GE/SW 70 MP	0252711591	D.62
CLI C 1-6 GE/SW 71 CD	1868811592	D.64
CLI C 1-6 GE/SW 71 MP	0252711592	D.62

Type	Order No.	Page
CLI C 1-6 GE/SW 72 CD	1868811593	D.64
CLI C 1-6 GE/SW 72 MP	0252711593	D.62
CLI C 1-6 GE/SW 73 CD	1868811594	D.64
CLI C 1-6 GE/SW 73 MP	0252711594	D.62
CLI C 1-6 GE/SW 74 CD	1868811595	D.64
CLI C 1-6 GE/SW 74 MP	0252711595	D.62
CLI C 1-6 GE/SW 75 CD	1868811596	D.64
CLI C 1-6 GE/SW 75 MP	0252711596	D.62
CLI C 1-6 GE/SW 76 CD	1868811597	D.64
CLI C 1-6 GE/SW 76 MP	0252711597	D.62
CLI C 1-6 GE/SW 77 CD	1868811598	D.64
CLI C 1-6 GE/SW 77 MP	0252711598	D.62
CLI C 1-6 GE/SW 78 CD	1868811599	D.64
CLI C 1-6 GE/SW 78 MP	0252711599	D.62
CLI C 1-6 GE/SW 79 CD	1868811600	D.64
CLI C 1-6 GE/SW 79 MP	0252711600	D.62
CLI C 1-6 GE/SW 80 CD	1868811601	D.64
CLI C 1-6 GE/SW 80 MP	0252711601	D.62
CLI C 1-6 GE/SW 81 CD	1868811602	D.64
CLI C 1-6 GE/SW 81 MP	0252711602	D.62
CLI C 1-6 GE/SW 82 CD	1868811603	D.64
CLI C 1-6 GE/SW 82 MP	0252711603	D.62
CLI C 1-6 GE/SW 83 CD	1868811604	D.64
CLI C 1-6 GE/SW 83 MP	0252711604	D.62
CLI C 1-6 GE/SW 84 CD	1868811605	D.64
CLI C 1-6 GE/SW 84 MP	0252711605	D.62
CLI C 1-6 GE/SW 85 CD	1868811606	D.64
CLI C 1-6 GE/SW 85 MP	0252711606	D.62
CLI C 1-6 GE/SW 86 CD	1868811607	D.64
CLI C 1-6 GE/SW 86 MP	0252711607	D.62
CLI C 1-6 GE/SW 87 CD	1868811608	D.64
CLI C 1-6 GE/SW 87 MP	0252711608	D.62
CLI C 1-6 GE/SW 88 CD	1868811609	D.64
CLI C 1-6 GE/SW 88 MP	0252711609	D.62
CLI C 1-6 GE/SW 89 CD	1868811610	D.64
CLI C 1-6 GE/SW 89 MP	0252711610	D.62
CLI C 1-6 GE/SW 90 CD	1868811611	D.64
CLI C 1-6 GE/SW 90 MP	0252711611	D.62
CLI C 1-6 GE/SW 91 CD	1868811612	D.64
CLI C 1-6 GE/SW 91 MP	0252711612	D.62
CLI C 1-6 GE/SW 92 CD	1868811613	D.64
CLI C 1-6 GE/SW 92 MP	0252711613	D.62
CLI C 1-6 GE/SW 93 CD	1868811614	D.64
CLI C 1-6 GE/SW 93 MP	0252711614	D.62
CLI C 1-6 GE/SW 94 CD	1868811615	D.64
CLI C 1-6 GE/SW 94 MP	0252711615	D.62
CLI C 1-6 GE/SW 95 CD	1868811616	D.64
CLI C 1-6 GE/SW 95 MP	0252711616	D.62
CLI C 1-6 GE/SW 96 CD	1868811617	D.64
CLI C 1-6 GE/SW 96 MP	0252711617	D.62
CLI C 1-6 GE/SW 97 CD	1868811618	D.64
CLI C 1-6 GE/SW 97 MP	0252711618	D.62
CLI C 1-6 GE/SW 98 CD	1868811619	D.64
CLI C 1-6 GE/SW 98 MP	0252711619	D.62
CLI C 1-6 GE/SW 99 CD	1868811620	D.64
CLI C 1-6 GE/SW 99 MP	0252711620	D.62
CLI C 1-6 GE/SW A1 CD	1868811726	D.65
CLI C 1-6 GE/SW A1 MP	0252711726	D.62
CLI C 1-6 GE/SW A2 CD	1868811727	D.65
CLI C 1-6 GE/SW A2 MP	0252711727	D.62
CLI C 1-6 GE/SW I1 CD	1868811739	D.65
CLI C 1-6 GE/SW I2 CD	1868811740	D.65
CLI C 1-6 GE/SW IC CD	1868811741	D.65
CLI C 1-6 GE/SW L1 CD	1868811728	D.65
CLI C 1-6 GE/SW L1 MP	0252711728	D.62
CLI C 1-6 GE/SW L2 CD	1868811729	D.65
CLI C 1-6 GE/SW L2 MP	0252711729	D.62
CLI C 1-6 GE/SW L3 CD	1868811730	D.65
CLI C 1-6 GE/SW L3 MP	0252711730	D.62
CLI C 1-6 GE/SW MP CD	1868811731	D.65
CLI C 1-6 GE/SW PE CD	1868811733	D.65
CLI C 1-6 GE/SW PE MP	0252711733	D.62
CLI C 1-6 GE/SW U1 CD	1868811735	D.65
CLI C 1-6 GE/SW U2 CD	1868811736	D.65
CLI C 1-6 GE/SW U3 CD	1868811737	D.65
CLI C 1-6 GE/SW UN CD	1868811738	D.65
CLI C 1-6 GE/SW X1 CD	1868811150	D.65
CLI C 1-6 GE/SW X2 CD	1868811151	D.65
CLI C 1-6 SDR CD	0252709999	D.49
CLI C 1-6 SDR SG	1912700000	D.50
CLI C 1-9 GE/SW PEN CD	1868811734	D.65
CLI C 1-9 GE/SW PEN MP	0252711734	D.63
CLI C 1-9 SDR CD	0252809999	D.49
CLI C 1-9 SDR SG	1868819999	D.50
CLI C 2-12 SDR SG	1873380000	D.50
CLI C 2-15 SDR SG	1873390000	D.50
CLI C 2-18 GE NE SG	1871831687	D.48
CLI C 2-18 SDR SG	1871839999	D.50
CLI C 2-21 SDR SG	1873400000	D.50
CLI C 2-24 SDR SG	1912710000	D.50
CLI C 2-27 SDR SG	1912720000	D.50
CLI C 2-30 SDR SG	1912730000	D.50
CLI C 2-33 SDR SG	1912740000	D.50
CLI C 2-36 SDR SG	1912750000	D.50
CLI C 2-39 SDR SG	1912760000	D.50
CLI C 2-4 BL/SW - CD	1568261741	D.68
CLI C 2-4 BL/SW 6 CD	1568261521	D.67
CLI C 2-4 BL/SW 6 MP	0251311521	D.65
CLI C 2-4 BR/WS 1 CD	1568261506	D.67

Type	Order No.	Page
CLI C 2-4 BR/WS 1 MP	0251311506	D.65
CLI C 2-4 GE NE CD	0171301687	D.48
CLI C 2-4 GE/SW - CD	1568261740	D.68
CLI C 2-4 GE/SW - MP	0251311740	D.67
CLI C 2-4 GE/SW . CD	1568261748	D.68
CLI C 2-4 GE/SW . MP	0251311748	D.67
CLI C 2-4 GE/SW / CD	1568261742	D.68
CLI C 2-4 GE/SW / MP	0251311742	D.67
CLI C 2-4 GE/SW : CD	1568261750	D.68
CLI C 2-4 GE/SW : MP	0251311750	D.67
CLI C 2-4 GE/SW + CD	1568261738	D.68
CLI C 2-4 GE/SW + MP	0251311738	D.67
CLI C 2-4 GE/SW = CD	1568261751	D.68
CLI C 2-4 GE/SW = MP	0251311751	D.67
CLI C 2-4 GE/SW 0 CD	1568261502	D.67
CLI C 2-4 GE/SW 0 MP	0251311502	D.66
CLI C 2-4 GE/SW 1 CD	1568261505	D.67
CLI C 2-4 GE/SW 1 MP	0251311505	D.66
CLI C 2-4 GE/SW 2 CD	1568261508	D.67
CLI C 2-4 GE/SW 2 MP	0251311508	D.66
CLI C 2-4 GE/SW 3 CD	1568261511	D.67
CLI C 2-4 GE/SW 3 MP	0251311511	D.66
CLI C 2-4 GE/SW 4 CD	1568261514	D.67
CLI C 2-4 GE/SW 4 CD	1568261514	D.67
CLI C 2-4 GE/SW 4 MP	0251311514	D.65
CLI C 2-4 GE/SW 4 MP	0251311514	D.66
CLI C 2-4 GE/SW 5 CD	1568261517	D.67
CLI C 2-4 GE/SW 5 MP	0251311517	D.66
CLI C 2-4 GE/SW 6 CD	1568261520	D.67
CLI C 2-4 GE/SW 6 MP	0251311520	D.66
CLI C 2-4 GE/SW 7 CD	1568261523	D.67
CLI C 2-4 GE/SW 7 MP	0251311523	D.66
CLI C 2-4 GE/SW 8 CD	1568261526	D.67
CLI C 2-4 GE/SW 8 MP	0251311526	D.66
CLI C 2-4 GE/SW 9 CD	1568261529	D.67
CLI C 2-4 GE/SW 9 MP	0251311529	D.66
CLI C 2-4 GE/SW A CD	1568261637	D.68
CLI C 2-4 GE/SW Ä CD	1568261697	D.68
CLI C 2-4 GE/SW Å CD	1568261699	D.68
CLI C 2-4 GE/SW A MP	0251311637	D.66
CLI C 2-4 GE/SW Ä MP	0251311697	D.67
CLI C 2-4 GE/SW Å MP	0251311699	D.67
CLI C 2-4 GE/SW AC CD	1568261752	D.68
CLI C 2-4 GE/SW AC MP	0251311752	D.67
CLI C 2-4 GE/SW Æ CD	1568261735	D.68
CLI C 2-4 GE/SW Æ MP	0251311735	D.67
CLI C 2-4 GE/SW B CD	1568261639	D.68
CLI C 2-4 GE/SW B MP	0251311639	D.66
CLI C 2-4 GE/SW C CD	1568261641	D.68
CLI C 2-4 GE/SW C MP	0251311641	D.66
CLI C 2-4 GE/SW D CD	1568261643	D.68
CLI C 2-4 GE/SW D MP	0251311643	D.66
CLI C 2-4 GE/SW E CD	1568261645	D.68
CLI C 2-4 GE/SW E MP	0251311645	D.66
CLI C 2-4 GE/SW ET CD	1568261746	D.68
CLI C 2-4 GE/SW ET MP	0251311746	D.67
CLI C 2-4 GE/SW F CD	1568261647	D.68
CLI C 2-4 GE/SW F MP	0251311647	D.66
CLI C 2-4 GE/SW G CD	1568261649	D.68
CLI C 2-4 GE/SW G MP	0251311649	D.66
CLI C 2-4 GE/SW H CD	1568261651	D.68
CLI C 2-4 GE/SW H MP	0251311651	D.66
CLI C 2-4 GE/SW I CD	1568261653	D.68
CLI C 2-4 GE/SW I MP	0251311653	D.66
CLI C 2-4 GE/SW J CD	1568261655	D.68
CLI C 2-4 GE/SW J MP	0251311655	D.66
CLI C 2-4 GE/SW K CD	1568261657	D.68
CLI C 2-4 GE/SW K MP	0251311657	D.66
CLI C 2-4 GE/SW L CD	1568261659	D.68
CLI C 2-4 GE/SW L MP	0251311659	D.66
CLI C 2-4 GE/SW M CD	1568261661	D.68
CLI C 2-4 GE/SW M MP	0251311661	D.66
CLI C 2-4 GE/SW N CD	1568261663	D.68
CLI C 2-4 GE/SW N MP	0251311663	D.66
CLI C 2-4 GE/SW O CD	1568261665	D.68
CLI C 2-4 GE/SW Ö CD	1568261695	D.68
CLI C 2-4 GE/SW Ø CD	1568261736	D.68
CLI C 2-4 GE/SW O MP	0251311665	D.66
CLI C 2-4 GE/SW Ö MP	0251311695	D.67
CLI C 2-4 GE/SW Ø MP	0251311736	D.67
CLI C 2-4 GE/SW P CD	1568261667	D.68
CLI C 2-4 GE/SW P MP	0251311667	D.66
CLI C 2-4 GE/SW PET. CD	1568261747	D.68
CLI C 2-4 GE/SW PET. MP	0251311747	D.67
CLI C 2-4 GE/SW Q CD	1568261669	D.68
CLI C 2-4 GE/SW Q MP	0251311669	D.66
CLI C 2-4 GE/SW R CD	1568261671	D.68
CLI C 2-4 GE/SW R MP	0251311671	D.66
CLI C 2-4 GE/SW S CD	1568261673	D.68
CLI C 2-4 GE/SW S MP	0251311673	D.66
CLI C 2-4 GE/SW T CD	1568261676	D.68
CLI C 2-4 GE/SW T MP	0251311676	D.66
CLI C 2-4 GE/SW U CD	1568261679	D.68
CLI C 2-4 GE/SW U MP	0251311679	D.66
CLI C 2-4 GE/SW V CD	1568261681	D.68
CLI C 2-4 GE/SW V MP	0251311681	D.66
CLI C 2-4 GE/SW W CD	1568261683	D.68
CLI C 2-4 GE/SW W MP	0251311683	D.66
CLI C 2-4 GE/SW X CD	1568261687	D.68

Type	Order No.	Page
CLI C 2-4 GE/SW X MP	0251311687	D.66
CLI C 2-4 GE/SW Y CD	1568261696	D.68
CLI C 2-4 GE/SW Y MP	0251311696	D.66
CLI C 2-4 GE/SW Z CD	1568261698	D.68
CLI C 2-4 GE/SW Z MP	0251311698	D.66
CLI C 2-4 GN/SW 5 CD	1568261518	D.67
CLI C 2-4 GN/SW 5 MP	0251311518	D.65
CLI C 2-4 GR/SW 8 CD	1568261527	D.67
CLI C 2-4 GR/SW 8 MP	0251311527	D.65
CLI C 2-4 OR/SW 3 CD	1568261512	D.67
CLI C 2-4 OR/SW 3 MP	0251311512	D.65
CLI C 2-4 RT/SW + CD	1568261737	D.68
CLI C 2-4 RT/SW 2 CD	1568261509	D.67
CLI C 2-4 RT/SW 2 MP	0251311509	D.65
CLI C 2-4 SDR CD	1568269999	D.50
CLI C 2-4 SW/WS 0 CD	1568261503	D.67
CLI C 2-4 SW/WS 0 MP	0251311503	D.65
CLI C 2-4 VI/SW 7 CD	1568261524	D.67
CLI C 2-4 VI/SW 7 MP	0251311524	D.65
CLI C 2-4 WS/SW - MP	0251311049	D.67
CLI C 2-4 WS/SW + MP	0251311048	D.67
CLI C 2-4 WS/SW 0 MP	0251311000	D.66
CLI C 2-4 WS/SW 1 MP	0251310001	D.66
CLI C 2-4 WS/SW 2 MP	0251310002	D.66
CLI C 2-4 WS/SW 3 MP	0251310003	D.66
CLI C 2-4 WS/SW 4 MP	0251310004	D.66
CLI C 2-4 WS/SW 5 MP	0251310005	D.66
CLI C 2-4 WS/SW 6 MP	0251310006	D.66
CLI C 2-4 WS/SW 7 MP	0251310007	D.66
CLI C 2-4 WS/SW 8 MP	0251310008	D.66
CLI C 2-4 WS/SW 9 CD	1568261530	D.67
CLI C 2-4 WS/SW 9 MP	0251310009	D.65
CLI C 2-4 WS/SW 9 MP	0251310009	D.66
CLI C 2-6 GE/SW L1 CD	1871901728	D.69
CLI C 2-6 GE/SW L1 MP	1871891728	D.69
CLI C 2-6 GE/SW L2 CD	1871901729	D.69
CLI C 2-6 GE/SW L2 MP	1871891729	D.69
CLI C 2-6 GE/SW L3 CD	1871901730	D.69
CLI C 2-6 GE/SW L3 MP	1871891730	D.69
CLI C 2-6 GE/SW PE CD	1871901731	D.69
CLI C 2-6 SDR CD	1871909999	D.50
CLI C 2-9 GE NE CD	1871971687	D.48
CLI C 2-9 GE/SW PEN CD	1871971734	D.69
CLI C 2-9 GE/SW PEN MP	1872031734	D.69
CLI C 2-9 SDR CD	1899240000	D.50
CLI C 2-9 SDR SG	1871979999	D.50
CLI C 3-12 SDR SG	1873420000	D.51
CLI C 3-15 SDR SG	1873430000	D.51
CLI C 3-18 SDR SG	1872679999	D.51
CLI C 3-21 SDR SG	1873410000	D.51
CLI C 3-24 SDR SG	1912770000	D.51
CLI C 3-27 SDR SG	1912780000	D.51
CLI C 3-30 SDR SG	1912790000	D.51
CLI C 3-33 SDR SG	1912800000	D.51
CLI C 3-36 SDR SG	1912810000	D.51
CLI C 3-39 SDR SG	1912820000	D.51
CLI C 3-6 BL/SW - MP	0253411741	D.71
CLI C 3-6 GE/SW / MP	0253411742	D.71
CLI C 3-6 GE/SW - MP	0253411740	D.71
CLI C 3-6 GE/SW . MP	0253411748	D.71
CLI C 3-6 GE/SW : MP	0253411750	D.71
CLI C 3-6 GE/SW + MP	0253411738	D.71
CLI C 3-6 GE/SW = MP	0253411751	D.71
CLI C 3-6 GE/SW 0 MP	0253411502	D.70
CLI C 3-6 GE/SW 1 MP	0253411505	D.70
CLI C 3-6 GE/SW 2 MP	0253411508	D.70
CLI C 3-6 GE/SW 3 MP	0253411511	D.70
CLI C 3-6 GE/SW 4 MP	0253411514	D.70
CLI C 3-6 GE/SW 5 MP	0253411517	D.70
CLI C 3-6 GE/SW 6 MP	0253411520	D.70
CLI C 3-6 GE/SW 7 MP	0253411523	D.70
CLI C 3-6 GE/SW 8 MP	0253411526	D.70
CLI C 3-6 GE/SW 9 MP	0253411529	D.70
CLI C 3-6 GE/SW A MP	0253411637	D.70
CLI C 3-6 GE/SW Ä MP	0253411697	D.71
CLI C 3-6 GE/SW Å MP	0253411699	D.71
CLI C 3-6 GE/SW AC MP	0253411752	D.71
CLI C 3-6 GE/SW B MP	0253411639	D.70
CLI C 3-6 GE/SW C MP	0253411641	D.70
CLI C 3-6 GE/SW D MP	0253411643	D.70
CLI C 3-6 GE/SW E MP	0253411645	D.70
CLI C 3-6 GE/SW ET MP	0253411746	D.71
CLI C 3-6 GE/SW F MP	0253411647	D.70
CLI C 3-6 GE/SW G MP	0253411649	D.70
CLI C 3-6 GE/SW H MP	0253411651	D.70
CLI C 3-6 GE/SW I MP	0253411653	D.70
CLI C 3-6 GE/SW J MP	0253411655	D.70
CLI C 3-6 GE/SW K MP	0253411657	D.70
CLI C 3-6 GE/SW L MP	0253411659	D.70
CLI C 3-6 GE/SW M MP	0253411661	D.70
CLI C 3-6 GE/SW N MP	0253411663	D.70
CLI C 3-6 GE/SW O MP	0253411665	D.70
CLI C 3-6 GE/SW Ö MP	0253411695	D.71
CLI C 3-6 GE/SW P MP	0253411667	D.70
CLI C 3-6 GE/SW Q MP	0253411669	D.70
CLI C 3-6 GE/SW R MP	0253411671	D.70
CLI C 3-6 GE/SW S MP	0253411673	D.70
CLI C 3-6 GE/SW T MP	0253411676	D.70
CLI C 3-6 GE/SW U MP	0253411679	D.70

Type	Order No.	Page
CLI C 3-6 GE/SW V MP	0253411681	D.70
CLI C 3-6 GE/SW W MP	0253411683	D.70
CLI C 3-6 GE/SW X MP	0253411687	D.70
CLI C 3-6 GE/SW Y MP	0253411696	D.70
CLI C 3-6 GE/SW Z MP	0253411698	D.70
CLI C 3-6 SDR SG	1872309999	D.51
CLI C 3-9 GE/SW A1 MP	0253511726	D.71
CLI C 3-9 GE/SW A2 MP	0253511727	D.71
CLI C 3-9 GE/SW L1 MP	0253511728	D.71
CLI C 3-9 GE/SW L2 MP	0253511729	D.71
CLI C 3-9 GE/SW L3 MP	0253511730	D.71
CLI C 3-9 GE/SW PE MP	0253511733	D.71
CLI C 3-9 GE/SW PEN MP	1872661733	D.71
CLI C 3-9 GE/SW SL MP	0253511735	D.71
CLI C 3-9 GE/SW X1 MP	0253511750	D.71
CLI C 3-9 GE/SW X2 MP	0253511751	D.71
CLI C 3-9 GE/SW X3 MP	0253511752	D.71
CLI C 3-9 SDR SG	1872659999	D.51
CLI CD-BOX	1763290000	D.93
CLI F 1-20 WS/GE	1600740000	D.16
CLI F 2-17.5 WS/GE	1764050000	D.16
CLI M 2-12 SDR SG	1873450000	D.85
CLI M 2-15 SDR SG	1899260000	D.85
CLI M 2-18 SDR SG	1899230000	D.85
CLI M 2-21 SDR SG	1873460000	D.85
CLI M 2-24 SDR SG	1912860000	D.85
CLI M 2-25Ω GE NEUT SG	1886531687	D.85
CLI M 2-25Ω SDR SG	1579500000	D.85
CLI M 2-27 SDR SG	1912870000	D.85
CLI M 2-30 SDR SG	1912880000	D.85
CLI M 2-33 SDR SG	1912920000	D.85
CLI M 2-36 SDR SG	1912950000	D.85
CLI M 2-39 SDR SG	1912960000	D.85
CLI M 2-4 BL/SW - CD	1568301741	D.88
CLI M 2-4 BL/SW 6 CD	1568301521	D.88
CLI M 2-4 BL/SW 6 MP	1733651521	D.86
CLI M 2-4 BR/WS 1 CD	1568301506	D.88
CLI M 2-4 BR/WS 1 MP	1733651506	D.86
CLI M 2-4 GE NE CD	1568300001	D.85
CLI M 2-4 GE NE MP	1733650004	D.85
CLI M 2-4 GE/SW / CD	1568301742	D.88
CLI M 2-4 GE/SW / MP	1733651742	D.86
CLI M 2-4 GE/SW - CD	1568301740	D.88
CLI M 2-4 GE/SW - MP	1733651740	D.86
CLI M 2-4 GE/SW . CD	1568301748	D.88
CLI M 2-4 GE/SW . MP	1733651748	D.86
CLI M 2-4 GE/SW : CD	1568301750	D.88
CLI M 2-4 GE/SW : MP	1733651750	D.86
CLI M 2-4 GE/SW + CD	1568301738	D.88
CLI M 2-4 GE/SW + MP	1733651738	D.86
CLI M 2-4 GE/SW = CD	1568301751	D.88
CLI M 2-4 GE/SW = MP	1733651751	D.86
CLI M 2-4 GE/SW 0 CD	1568301502	D.89
CLI M 2-4 GE/SW 0 MP	1733651502	D.87
CLI M 2-4 GE/SW 1 CD	1568301505	D.89
CLI M 2-4 GE/SW 1 MP	1733651505	D.87
CLI M 2-4 GE/SW 2 CD	1568301508	D.89
CLI M 2-4 GE/SW 2 MP	1733651508	D.87
CLI M 2-4 GE/SW 3 CD	1568301511	D.89
CLI M 2-4 GE/SW 3 MP	1733651511	D.87
CLI M 2-4 GE/SW 4 CD	1568301514	D.88
CLI M 2-4 GE/SW 4 CD	1568301514	D.89
CLI M 2-4 GE/SW 4 MP	1733651514	D.86
CLI M 2-4 GE/SW 4 MP	1733651514	D.87
CLI M 2-4 GE/SW 5 CD	1568301517	D.89
CLI M 2-4 GE/SW 5 MP	1733651517	D.87
CLI M 2-4 GE/SW 6 CD	1568301520	D.89
CLI M 2-4 GE/SW 6 MP	1733651520	D.87
CLI M 2-4 GE/SW 7 CD	1568301523	D.89
CLI M 2-4 GE/SW 7 MP	1733651523	D.87
CLI M 2-4 GE/SW 8 CD	1568301526	D.89
CLI M 2-4 GE/SW 8 MP	1733651526	D.87
CLI M 2-4 GE/SW 9 CD	1568301529	D.89
CLI M 2-4 GE/SW 9 MP	1733651529	D.87
CLI M 2-4 GE/SW A CD	1568301637	D.89
CLI M 2-4 GE/SW Ä CD	1568301694	D.88
CLI M 2-4 GE/SW Å CD	1568301699	D.88
CLI M 2-4 GE/SW A MP	1733651637	D.87
CLI M 2-4 GE/SW Ä MP	1733651697	D.86
CLI M 2-4 GE/SW Å MP	1733651699	D.86
CLI M 2-4 GE/SW AC CD	1568301752	D.88
CLI M 2-4 GE/SW AC MP	1733651752	D.86
CLI M 2-4 GE/SW Æ CD	1568301735	D.88
CLI M 2-4 GE/SW B CD	1568301639	D.89
CLI M 2-4 GE/SW B MP	1733651639	D.87
CLI M 2-4 GE/SW C CD	1568301641	D.89
CLI M 2-4 GE/SW C MP	1733651641	D.87
CLI M 2-4 GE/SW D CD	1568301643	D.89
CLI M 2-4 GE/SW D MP	1733651643	D.87
CLI M 2-4 GE/SW E CD	1568301645	D.89
CLI M 2-4 GE/SW E MP	1733651645	D.87
CLI M 2-4 GE/SW ET CD	1568301746	D.88
CLI M 2-4 GE/SW ET MP	1733651746	D.86
CLI M 2-4 GE/SW F CD	1568301647	D.89
CLI M 2-4 GE/SW F MP	1733651647	D.87
CLI M 2-4 GE/SW G CD	1568301649	D.89
CLI M 2-4 GE/SW G MP	1733651649	D.87
CLI M 2-4 GE/SW H CD	1568301651	D.89
CLI M 2-4 GE/SW H MP	1733651651	D.87

Type	Order No.	Page
CLI M 2-4 GE/SW I CD	1568301653	D.89
CLI M 2-4 GE/SW I MP	1733651653	D.87
CLI M 2-4 GE/SW J CD	1568301655	D.89
CLI M 2-4 GE/SW J MP	1733651655	D.87
CLI M 2-4 GE/SW K CD	1568301657	D.89
CLI M 2-4 GE/SW K MP	1733651657	D.87
CLI M 2-4 GE/SW L CD	1568301659	D.89
CLI M 2-4 GE/SW L MP	1733651659	D.87
CLI M 2-4 GE/SW M CD	1568301661	D.89
CLI M 2-4 GE/SW M MP	1733651661	D.87
CLI M 2-4 GE/SW N CD	1568301663	D.89
CLI M 2-4 GE/SW N MP	1733651663	D.87
CLI M 2-4 GE/SW O CD	1568301665	D.89
CLI M 2-4 GE/SW Ö CD	1568301695	D.88
CLI M 2-4 GE/SW Ø CD	1568301736	D.88
CLI M 2-4 GE/SW O MP	1733651665	D.87
CLI M 2-4 GE/SW Ö MP	1733651695	D.86
CLI M 2-4 GE/SW P CD	1568301667	D.89
CLI M 2-4 GE/SW P MP	1733651667	D.87
CLI M 2-4 GE/SW PET. CD	1568301747	D.88
CLI M 2-4 GE/SW PET. MP	1733651747	D.86
CLI M 2-4 GE/SW Q CD	1568301669	D.89
CLI M 2-4 GE/SW Q MP	1733651669	D.87
CLI M 2-4 GE/SW R CD	1568301671	D.89
CLI M 2-4 GE/SW R MP	1733651671	D.87
CLI M 2-4 GE/SW S CD	1568301673	D.89
CLI M 2-4 GE/SW S MP	1733651673	D.87
CLI M 2-4 GE/SW T CD	1568301676	D.89
CLI M 2-4 GE/SW T MP	1733651676	D.87
CLI M 2-4 GE/SW U CD	1568301679	D.89
CLI M 2-4 GE/SW U MP	1733651679	D.87
CLI M 2-4 GE/SW V CD	1568301681	D.89
CLI M 2-4 GE/SW V MP	1733651681	D.87
CLI M 2-4 GE/SW W CD	1568301683	D.89
CLI M 2-4 GE/SW W MP	1733651683	D.87
CLI M 2-4 GE/SW X CD	1568301687	D.89
CLI M 2-4 GE/SW X MP	1733651687	D.87
CLI M 2-4 GE/SW Y CD	1568301696	D.89
CLI M 2-4 GE/SW Y MP	1733651696	D.87
CLI M 2-4 GE/SW Z CD	1568301698	D.89
CLI M 2-4 GE/SW Z MP	1733651698	D.87
CLI M 2-4 GN/SW 5 CD	1568301518	D.88
CLI M 2-4 GN/SW 5 MP	1733651518	D.86
CLI M 2-4 GR/SW 8 CD	1568301527	D.88
CLI M 2-4 GR/SW 8 MP	1733651527	D.86
CLI M 2-4 OR/SW 3 CD	1568301512	D.88
CLI M 2-4 OR/SW 3 MP	1733651512	D.86
CLI M 2-4 RT/SW 2 CD	1568301509	D.88
CLI M 2-4 RT/SW 2 MP	1733651509	D.86
CLI M 2-4 SDR CD	1568309999	D.86
CLI M 2-4 SDR SG	1912830000	D.85
CLI M 2-4 SW/WS 0 MP	1733651503	D.86
CLI M 2-4 VI/SW 7 CD	1568301524	D.88
CLI M 2-4 VI/SW 7 MP	1733651524	D.86
CLI M 2-4 WS/SW 0 CD	1568301000	D.89
CLI M 2-4 WS/SW 1 CD	1568301697	D.89
CLI M 2-4 WS/SW 2 CD	1568300002	D.89
CLI M 2-4 WS/SW 3 CD	1568300003	D.89
CLI M 2-4 WS/SW 4 CD	1568300004	D.89
CLI M 2-4 WS/SW 5 CD	1568300005	D.89
CLI M 2-4 WS/SW 6 CD	1568300006	D.89
CLI M 2-4 WS/SW 7 CD	1568300007	D.89
CLI M 2-4 WS/SW 8 CD	1568300008	D.89
CLI M 2-4 WS/SW 9 CD	1568301530	D.88
CLI M 2-4 WS/SW 9 CD	1568301530	D.89
CLI M 2-4 WS/SW 9 MP	1733651530	D.86
CLI M 2-40Ω GE NEUT SG	1886541687	D.85
CLI M 2-40Ω SDR SG	1634790000	D.85
CLI M 2-6 GE/SW L1 CD	1871781728	D.90
CLI M 2-6 GE/SW L1 MP	1871751728	D.90
CLI M 2-6 GE/SW L2 CD	1871781729	D.90
CLI M 2-6 GE/SW L2 MP	1871751729	D.90
CLI M 2-6 GE/SW L3 CD	1871781730	D.90
CLI M 2-6 GE/SW L3 MP	1871751730	D.90
CLI M 2-6 SDR CD	1871789999	D.86
CLI M 2-6 SDR SG	1912840000	D.85
CLI M 2-9 SDR CD	1899250000	D.86
CLI M 2-9 SDR SG	1873440000	D.85
CLI MH 110 HSTR	0189400000	D.92
CLI MH 70 HSTR	0524400000	D.92
CLI O 10-3 GE NE MP	0689600000	D.79
CLI O 10-3 GE/SW - MP	0648001740	D.80
CLI O 10-3 GE/SW + MP	0648001738	D.80
CLI O 10-3 GE/SW A MP	0648001637	D.80
CLI O 10-3 GE/SW Ä MP	0648001697	D.80
CLI O 10-3 GE/SW Å MP	0648001699	D.80
CLI O 10-3 GE/SW B MP	0648001639	D.80
CLI O 10-3 GE/SW C MP	0648001641	D.80
CLI O 10-3 GE/SW D MP	0648001643	D.80
CLI O 10-3 GE/SW E MP	0648001645	D.80
CLI O 10-3 GE/SW ET MP	0648001746	D.80
CLI O 10-3 GE/SW F MP	0648001647	D.80
CLI O 10-3 GE/SW G MP	0648001649	D.80
CLI O 10-3 GE/SW H MP	0648001651	D.80
CLI O 10-3 GE/SW I MP	0648001653	D.80
CLI O 10-3 GE/SW J MP	0648001655	D.80
CLI O 10-3 GE/SW K MP	0648001657	D.80
CLI O 10-3 GE/SW L MP	0648001659	D.80
CLI O 10-3 GE/SW M MP	0648001661	D.80
CLI O 10-3 GE/SW N MP	0648001663	D.80
CLI O 10-3 GE/SW O MP	0648001665	D.80
CLI O 10-3 GE/SW Ö MP	0648001695	D.80
CLI O 10-3 GE/SW P MP	0648001667	D.80
CLI O 10-3 GE/SW Q MP	0648001669	D.80
CLI O 10-3 GE/SW R MP	0648001671	D.80
CLI O 10-3 GE/SW S MP	0648001673	D.80
CLI O 10-3 GE/SW T MP	0648001676	D.80
CLI O 10-3 GE/SW U MP	0648001679	D.80
CLI O 10-3 GE/SW V MP	0648001681	D.80
CLI O 10-3 GE/SW W MP	0648001683	D.80
CLI O 10-3 GE/SW X MP	0648001687	D.80
CLI O 10-3 GE/SW Y MP	0648001696	D.80
CLI O 10-3 GE/SW Z MP	0648001698	D.80
CLI O 10-3 SDR MP	0648009999	D.79
CLI O 20-3 GE NE MP	0689700000	D.79
CLI O 20-3 GE/SW - MP	0648101740	D.82
CLI O 20-3 GE/SW + MP	0648101738	D.82
CLI O 20-3 GE/SW O MP	0648101502	D.81
CLI O 20-3 GE/SW 1 MP	0648101505	D.81
CLI O 20-3 GE/SW 2 MP	0648101508	D.81
CLI O 20-3 GE/SW 3 MP	0648101511	D.81
CLI O 20-3 GE/SW 4 MP	0648101514	D.81
CLI O 20-3 GE/SW 5 MP	0648101517	D.81
CLI O 20-3 GE/SW 6 MP	0648101520	D.81
CLI O 20-3 GE/SW 7 MP	0648101523	D.81
CLI O 20-3 GE/SW 8 MP	0648101526	D.81
CLI O 20-3 GE/SW 9 MP	0648101529	D.81
CLI O 20-3 GE/SW A MP	0648101637	D.81
CLI O 20-3 GE/SW Ä MP	0648101697	D.82
CLI O 20-3 GE/SW Å MP	0648101699	D.82
CLI O 20-3 GE/SW B MP	0648101639	D.81
CLI O 20-3 GE/SW C MP	0648101641	D.81
CLI O 20-3 GE/SW D MP	0648101643	D.81
CLI O 20-3 GE/SW E MP	0648101645	D.81
CLI O 20-3 GE/SW F MP	0648101647	D.81
CLI O 20-3 GE/SW G MP	0648101649	D.81
CLI O 20-3 GE/SW H MP	0648101651	D.81
CLI O 20-3 GE/SW I MP	0648101653	D.81
CLI O 20-3 GE/SW J MP	0648101655	D.81
CLI O 20-3 GE/SW K MP	0648101657	D.81
CLI O 20-3 GE/SW L MP	0648101659	D.81
CLI O 20-3 GE/SW M MP	0648101661	D.81
CLI O 20-3 GE/SW N MP	0648101663	D.81
CLI O 20-3 GE/SW O MP	0648101665	D.81
CLI O 20-3 GE/SW Ö MP	0648101695	D.82
CLI O 20-3 GE/SW P MP	0648101667	D.81
CLI O 20-3 GE/SW Q MP	0648101669	D.81
CLI O 20-3 GE/SW R MP	0648101671	D.81
CLI O 20-3 GE/SW S MP	0648101673	D.81
CLI O 20-3 GE/SW T MP	0648101676	D.81
CLI O 20-3 GE/SW U MP	0648101679	D.81
CLI O 20-3 GE/SW V MP	0648101681	D.81
CLI O 20-3 GE/SW W MP	0648101683	D.81
CLI O 20-3 GE/SW X MP	0648101687	D.81
CLI O 20-3 GE/SW Y MP	0648101696	D.81
CLI O 20-3 GE/SW Z MP	0648101698	D.81
CLI O 20-3 SDR MP	0648109999	D.79
CLI O 30-3 GE NE MP	0689800000	D.79
CLI O 30-3 GE/SW - MP	0648201740	D.83
CLI O 30-3 GE/SW + MP	0648201738	D.83
CLI O 30-3 GE/SW O MP	0648201502	D.82
CLI O 30-3 GE/SW 1 MP	0648201505	D.82
CLI O 30-3 GE/SW 2 MP	0648201508	D.82
CLI O 30-3 GE/SW 3 MP	0648201511	D.82
CLI O 30-3 GE/SW 4 MP	0648201514	D.82
CLI O 30-3 GE/SW 5 MP	0648201517	D.82
CLI O 30-3 GE/SW 6 MP	0648201520	D.82
CLI O 30-3 GE/SW 7 MP	0648201523	D.82
CLI O 30-3 GE/SW 8 MP	0648201526	D.82
CLI O 30-3 GE/SW 9 MP	0648201529	D.82
CLI O 30-3 GE/SW A MP	0648201637	D.83
CLI O 30-3 GE/SW Ä MP	0648201697	D.83
CLI O 30-3 GE/SW Å MP	0648201699	D.83
CLI O 30-3 GE/SW B MP	0648201639	D.83
CLI O 30-3 GE/SW C MP	0648201641	D.83
CLI O 30-3 GE/SW D MP	0648201643	D.83
CLI O 30-3 GE/SW E MP	0648201645	D.83
CLI O 30-3 GE/SW ET MP	0648201746	D.83
CLI O 30-3 GE/SW F MP	0648201647	D.83
CLI O 30-3 GE/SW G MP	0648201649	D.83
CLI O 30-3 GE/SW H MP	0648201651	D.83
CLI O 30-3 GE/SW I MP	0648201653	D.83
CLI O 30-3 GE/SW J MP	0648201655	D.83
CLI O 30-3 GE/SW K MP	0648201657	D.83
CLI O 30-3 GE/SW L MP	0648201659	D.83
CLI O 30-3 GE/SW M MP	0648201661	D.83
CLI O 30-3 GE/SW N MP	0648201663	D.83
CLI O 30-3 GE/SW O MP	0648201665	D.83
CLI O 30-3 GE/SW Ö MP	0648201695	D.83
CLI O 30-3 GE/SW P MP	0648201667	D.83
CLI O 30-3 GE/SW Q MP	0648201669	D.83
CLI O 30-3 GE/SW R MP	0648201671	D.83
CLI O 30-3 GE/SW S MP	0648201673	D.83
CLI O 30-3 GE/SW T MP	0648201676	D.83
CLI O 30-3 GE/SW U MP	0648201679	D.83
CLI O 30-3 GE/SW V MP	0648201681	D.83
CLI O 30-3 GE/SW W MP	0648201683	D.83
CLI O 30-3 GE/SW X MP	0648201687	D.83
CLI O 30-3 GE/SW Y MP	0648201696	D.83
CLI O 30-3 GE/SW Z MP	0648201698	D.83
CLI O 30-3 SDR MP	0648209999	D.80
CLI R 02 F. CLI C 02-3	0559900000	D.92
CLI R 02-3 BL/SW -	0560001741	D.75
CLI R 02-3 BL/SW 6	0560001521	D.73
CLI R 02-3 BR/WS 1	0560001506	D.73
CLI R 02-3 GE NE	0560001687	D.72
CLI R 02-3 GE/SW -	0560001740	D.74
CLI R 02-3 GE/SW .	0560001749	D.74
CLI R 02-3 GE/SW /	0560001743	D.74
CLI R 02-3 GE/SW +	0560001738	D.74
CLI R 02-3 GE/SW 0	0560001501	D.73
CLI R 02-3 GE/SW 1	0560001504	D.73
CLI R 02-3 GE/SW 2	0560001507	D.73
CLI R 02-3 GE/SW 3	0560001510	D.73
CLI R 02-3 GE/SW 4	0560001513	D.73
CLI R 02-3 GE/SW 4	0560001513	D.73
CLI R 02-3 GE/SW 5	0560001516	D.73
CLI R 02-3 GE/SW 6	0560001519	D.73
CLI R 02-3 GE/SW 7	0560001522	D.73
CLI R 02-3 GE/SW 8	0560001525	D.73
CLI R 02-3 GE/SW 9	0560001528	D.73
CLI R 02-3 GE/SW A	0560001638	D.74
CLI R 02-3 GE/SW Å	0560001698	D.74
CLI R 02-3 GE/SW B	0560001640	D.74
CLI R 02-3 GE/SW C	0560001642	D.74
CLI R 02-3 GE/SW D	0560001644	D.74
CLI R 02-3 GE/SW E	0560001646	D.74
CLI R 02-3 GE/SW F	0560001648	D.74
CLI R 02-3 GE/SW G	0560001650	D.74
CLI R 02-3 GE/SW H	0560001652	D.74
CLI R 02-3 GE/SW I	0560001654	D.74
CLI R 02-3 GE/SW J	0560001656	D.74
CLI R 02-3 GE/SW K	0560001658	D.74
CLI R 02-3 GE/SW L	0560001660	D.74
CLI R 02-3 GE/SW M	0560001662	D.74
CLI R 02-3 GE/SW N	0560001664	D.74
CLI R 02-3 GE/SW O	0560001666	D.74
CLI R 02-3 GE/SW Ö	0560001695	D.74
CLI R 02-3 GE/SW P	0560001668	D.74
CLI R 02-3 GE/SW Q	0560001670	D.74
CLI R 02-3 GE/SW R	0560001672	D.74
CLI R 02-3 GE/SW S	0560001675	D.74
CLI R 02-3 GE/SW T	0560001678	D.74
CLI R 02-3 GE/SW U	0560001680	D.74
CLI R 02-3 GE/SW V	0560001682	D.74
CLI R 02-3 GE/SW W	0560001684	D.74
CLI R 02-3 GE/SW X	0560001693	D.74
CLI R 02-3 GE/SW Y	0560001697	D.74
CLI R 02-3 GE/SW Z	0560001699	D.74
CLI R 02-3 GN/SW 5	0560001518	D.73
CLI R 02-3 GR/SW 8	0560001527	D.73
CLI R 02-3 OR/SW 3	0560001512	D.73
CLI R 02-3 RT/SW +	0560001739	D.75
CLI R 02-3 RT/SW 2	0560001509	D.73
CLI R 02-3 SDR	0560009999	D.72
CLI R 02-3 SW/WS 0	0560001503	D.73
CLI R 02-3 VI/SW 7	0560001524	D.73
CLI R 02-3 WS/SW 9	0560001530	D.73
CLI R 1 F. CLI C 1-3	0532100000	D.92
CLI R 1-3 BL NE	0572900002	D.72
CLI R 1-3 BL/SW -	0572901741	D.76
CLI R 1-3 BL/SW 6	0572901520	D.75
CLI R 1-3 BL/SW N	0572901746	D.76
CLI R 1-3 BR/WS 1	0572901505	D.75
CLI R 1-3 GE NE	0572901687	D.72
CLI R 1-3 GE/SW -	0572901740	D.76
CLI R 1-3 GE/SW .	0572901749	D.76
CLI R 1-3 GE/SW /	0572901743	D.76
CLI R 1-3 GE/SW +	0572901738	D.76
CLI R 1-3 GE/SW 0	0572901503	D.75
CLI R 1-3 GE/SW 1	0572901506	D.75
CLI R 1-3 GE/SW 2	0572901509	D.75
CLI R 1-3 GE/SW 3	0572901512	D.75
CLI R 1-3 GE/SW 4	0572901515	D.75
CLI R 1-3 GE/SW 4	0572901515	D.75
CLI R 1-3 GE/SW 5	0572901518	D.75
CLI R 1-3 GE/SW 6	0572901521	D.75
CLI R 1-3 GE/SW 7	0572901524	D.75
CLI R 1-3 GE/SW 8	0572901527	D.75
CLI R 1-3 GE/SW 9	0572901530	D.75
CLI R 1-3 GE/SW A	0572901638	D.76
CLI R 1-3 GE/SW Å	0572901698	D.76
CLI R 1-3 GE/SW B	0572901640	D.76
CLI R 1-3 GE/SW C	0572901642	D.76
CLI R 1-3 GE/SW D	0572901644	D.76
CLI R 1-3 GE/SW E	0572901646	D.76
CLI R 1-3 GE/SW ET	0572901745	D.76
CLI R 1-3 GE/SW F	0572901648	D.76
CLI R 1-3 GE/SW G	0572901650	D.76
CLI R 1-3 GE/SW H	0572901652	D.76
CLI R 1-3 GE/SW I	0572901654	D.76
CLI R 1-3 GE/SW J	0572901656	D.76
CLI R 1-3 GE/SW K	0572901658	D.76
CLI R 1-3 GE/SW L	0572901660	D.76
CLI R 1-3 GE/SW M	0572901662	D.76
CLI R 1-3 GE/SW N	0572901664	D.76
CLI R 1-3 GE/SW O	0572901666	D.76
CLI R 1-3 GE/SW P	0572901668	D.76
CLI R 1-3 GE/SW Q	0572901670	D.76
CLI R 1-3 GE/SW R	0572901672	D.76
CLI R 1-3 GE/SW S	0572901675	D.76
CLI R 1-3 GE/SW T	0572901678	D.76
CLI R 1-3 GE/SW U	0572901680	D.76
CLI R 1-3 GE/SW V	0572901682	D.76
CLI R 1-3 GE/SW W	0572901684	D.76
CLI R 1-3 GE/SW X	0572901693	D.76
CLI R 1-3 GE/SW Y	0572901697	D.76
CLI R 1-3 GE/SW Z	0572901699	D.76
CLI R 1-3 GN/SW 5	0572901517	D.75
CLI R 1-3 GR/SW 8	0572901526	D.75
CLI R 1-3 OR/SW 3	0572901511	D.75
CLI R 1-3 RT/SW +	0572901739	D.76
CLI R 1-3 RT/SW 2	0572901508	D.75
CLI R 1-3 SDR	0572909999	D.72
CLI R 1-3 SW/WS 0	0572901502	D.75
CLI R 1-3 VI/SW 7	0572901523	D.75
CLI R 1-3 WS/SW 9	0572901529	D.75
CLI RH 20-02 CLI R 02	0563700000	D.92
CLI RH 20-10 CLI R 10	0563600000	D.92
CLI RS 3 MDCLI C 02	0559200000	D.92
CLI RS 4 MDCLI C1+02	0559300000	D.92
CLI RS 5 MDCLI C 1	0648300000	D.92
CLI T 02-12	1764060000	D.16
CLI T 02-15	1764070000	D.16
CLI T 02-18	1764140000	D.16
CLI T 02-20	1764150000	D.16
CLI T 02-30	1889580000	D.16
CLI T 1-12	1764190000	D.16
CLI T 1-15	1764200000	D.16
CLI T 1-18	1764210000	D.16
CLI T 1-20	1764220000	D.16
CLI T 1-30	1889560000	D.16
CLI T 2-12	1764230000	D.16
CLI T 2-15	1764240000	D.16
CLI T 2-18	1764250000	D.16
CLI T 2-20	1764260000	D.16
CLI T 2-30	1889570000	D.16
CLI T 3-12	1764270000	D.16
CLI T 3-15	1764280000	D.16
CLI T 3-18	1764290000	D.16
CLI T 3-20	1764300000	D.16
CLI T 3-30	1889550000	D.16
CLI TM 10-33	1763270000	D.16
CLI TM 20-33	1763280000	D.16
CLI TM 20-66	1763390000	D.16

D

Type	Order No.	Page
DEK 5 FS 101-150	0473560101	C.11
DEK 5 FS 1-50	0473560001	C.11
DEK 5 FS 151-200	0473560151	C.11
DEK 5 FS 201-250	0473560201	C.11
DEK 5 FS 51-100	0473560051	C.11
DEK 5 FSZ 1-10	0460660001	C.11
DEK 5 FSZ 11-20	0460660011	C.11
DEK 5 FSZ 21-30	0460660021	C.11
DEK 5 FSZ 31-40	0460660031	C.11
DEK 5 FSZ 41-50	0460660041	C.11
DEK 5 FSZ 51-60	0460660051	C.11
DEK 5 FSZ 61-70	0460660061	C.11
DEK 5 FSZ 71-80	0460660071	C.11
DEK 5 FSZ 81-90	0460660081	C.11
DEK 5 FSZ 91-100	0460660091	C.11
DEK 5 FW 1,3,5,...99	1358460000	C.11
DEK 5 FW 101-150	0473460101	C.11
DEK 5 FW 1-50	0473460001	C.11
DEK 5 FW 151-200	0473460151	C.11
DEK 5 FW 2,4,...100	1358560000	C.11
DEK 5 FW 201-250	0473460201	C.11
DEK 5 FW 251-300	0473460251	C.11
DEK 5 FW 301-350	0473460301	C.11
DEK 5 FW 351-400	0473460351	C.11
DEK 5 FW 401-450	0473460401	C.11
DEK 5 FW 451-500	0473460451	C.11
DEK 5 FW 501-550	0473460501	C.11
DEK 5 FW 51-100	0473460051	C.11
DEK 5 FW 551-600	0473460551	C.11
DEK 5 FW 601-650	0473460601	C.11
DEK 5 FW 651-700	0473460651	C.11
DEK 5 FW 701-750	0473460701	C.11
DEK 5 FW 751-800	0473460751	C.11
DEK 5 FW 801-850	0473460801	C.11
DEK 5 FW 851-900	0473460851	C.11
DEK 5 FW 901-950	0473460901	C.11
DEK 5 FWZ 1,3,5-19	0235860000	C.11
DEK 5 FWZ 1-10	0523060001	C.11
DEK 5 FWZ 11-20	0523060011	C.11
DEK 5 FWZ 2,4,6-20	0236160000	C.11
DEK 5 FWZ 21,23,25-39	0235960000	C.11
DEK 5 FWZ 21-30	0523060021	C.11
DEK 5 FWZ 22,24,26-40	0236260000	C.11
DEK 5 FWZ 31-40	0523060031	C.11
DEK 5 FWZ 41,43,45-59	0236060000	C.11
DEK 5 FWZ 41-50	0523060041	C.11
DEK 5 FWZ 42,44,46-60	0236360000	C.11
DEK 5 FWZ 51-60	0523060051	C.11

Type	Order No.	Page
DEK 5 FWZ 61-70	0523060061	C.11
DEK 5 FWZ 71-80	0523060071	C.11
DEK 5 FWZ 81-90	0523060081	C.11
DEK 5 FWZ 91-100	0523060091	C.11
DEK 5 FWZ L1-EIK	0354361203	C.11
DEK 5 FWZ L1-PE	0354361187	C.11
DEK 5 FWZ U,V,W,N,PE	0558360000	C.11
DEK 5 GW -	0576261199	C.11
DEK 5 GW +	0576261198	C.11
DEK 5 GW 1	0522660001	C.11
DEK 5 GW 10	0522660010	C.11
DEK 5 GW 11	0522660011	C.11
DEK 5 GW 12	0522660012	C.11
DEK 5 GW 13	0522660013	C.11
DEK 5 GW 14	0522660014	C.11
DEK 5 GW 15	0522660015	C.11
DEK 5 GW 16	0522660016	C.11
DEK 5 GW 17	0522660017	C.11
DEK 5 GW 18	0522660018	C.11
DEK 5 GW 19	0522660019	C.11
DEK 5 GW 2	0522660002	C.11
DEK 5 GW 20	0522660020	C.11
DEK 5 GW 21	0522660021	C.11
DEK 5 GW 3	0522660003	C.11
DEK 5 GW 4	0522660004	C.11
DEK 5 GW 5	0522660005	C.11
DEK 5 GW 6	0522660006	C.11
DEK 5 GW 7	0522660007	C.11
DEK 5 GW 8	0522660008	C.11
DEK 5 GW 9	0522660009	C.11
DEK 5 GW A	0522761021	C.11
DEK 5 GW B	0522761022	C.11
DEK 5 GW ERDE	0576261202	C.11
DEK 5 GW ERDE I.KR.	0576261203	C.11
DEK 5 GW F	0522761026	C.11
DEK 5 GW L	0522761032	C.11
DEK 5 GW L1	0522361075	C.11
DEK 5 GW L2	0522361076	C.11
DEK 5 GW L3	0522361077	C.11
DEK 5 GW N	0522761034	C.11
DEK 5 GW O	0522761035	C.11
DEK 5 GW PE	0537261187	C.11
DEK 5 GW R	0522761038	C.11
DEK 5 GW S	0522761039	C.11
DEK 5 GW T	0522761040	C.11
DEK 5 GW U	0522761041	C.11
DEK 5 GW V	0522761042	C.11
DEK 5 GW W	0522761043	C.11
DEK 5 GW X	0522761044	C.11
DEK 5/3,5 MC FSZ 101-110	1762320101	C.11
DEK 5/3,5 MC FSZ 1-10	1762320001	C.11
DEK 5/3,5 MC FSZ 111-120	1762320111	C.11
DEK 5/3,5 MC FSZ 11-20	1762320011	C.11
DEK 5/3,5 MC FSZ 121-130	1762320121	C.11
DEK 5/3,5 MC FSZ 21-30	1762320021	C.11
DEK 5/3,5 MC FSZ 31-40	1762320031	C.11
DEK 5/3,5 MC FSZ 41-50	1762320041	C.11
DEK 5/3,5 MC FSZ 51-60	1762320051	C.11
DEK 5/3,5 MC FSZ 61-70	1762320061	C.11
DEK 5/3,5 MC FSZ 71-80	1762320071	C.11
DEK 5/3,5 MC FSZ 81-90	1762320081	C.11
DEK 5/3,5 MC FSZ 91-100	1762320091	C.11
DEK 5/3.5 MC NE WS	1755270000	C.13
DEK 5/3.5 MC SDR	1767730000	C.13
DEK 5/3.5 MM WS	2007100000	C.95
DEK 5/3.5 PLUS MC NE WS	2003750000	C.13
DEK 5/3.5 PLUS MC SDR	2007790000	C.13
DEK 5/30 MC NE GE	1350340000	C.19
DEK 5/30 MC NE WS	1951920000	C.19
DEK 5/30 MC NE WS	1951920000	C.86
DEK 5/30 MC SDR	1025680000	C.19
DEK 5/5 MC NE BL	1609801693	C.14
DEK 5/5 MC NE GE	1609801687	C.14
DEK 5/5 MC NE GN	1609801688	C.14
DEK 5/5 MC NE GR	1609801691	C.14
DEK 5/5 MC NE OR	1238340000	C.14
DEK 5/5 MC NE RT	1609801686	C.14
DEK 5/5 MC NE WS	1609801044	C.14
DEK 5/5 MC NE WS	1609801044	C.87
DEK 5/5 MC NE WS	1609801044	C.89
DEK 5/5 MC NE WS	1609801044	E.46
DEK 5/5 MC SDR	1609810000	C.14
DEK 5/5 MC SDR	1609810000	C.86
DEK 5/5 MM WS	2007110000	C.95
DEK 5/5 PLUS MC NE GE	1907520000	C.14
DEK 5/5 PLUS MC NE WS	1854490000	C.14
DEK 5/5 PLUS MC SDR	1854500000	C.14
DEK 5/5 S MC NE WS	1341620000	C.15
DEK 5/5 S MC SDR	1341590000	C.15
DEK 5/6 MC NE OR	1912090000	C.15
DEK 5/6 MC NE WS	1609820000	C.15
DEK 5/6 MC SDR	1609830000	C.15
DEK 5/6 MM WS	2007120000	C.95
DEK 5/6 PLUS MC NE OR	1378720000	C.16
DEK 5/6 PLUS MC NE WS	1011320000	C.16
DEK 5/6 PLUS MC SDR	1038650000	C.16
DEK 5/6.5 MC NE WS	1609840000	C.16
DEK 5/6.5 MC SDR	1609850000	C.16
DEK 5/6.5 PLUS MC NE GE	1364020000	C.17
DEK 5/6.5 PLUS MC NE WS	1046340000	C.17
DEK 5/6.5 PLUS MC SDR	1046360000	C.17
DEK 5/7.5 MC NE WS	1720620000	C.17
DEK 5/7.5 MC SDR	1770490000	C.17
DEK 5/8 MC NE WS	1856740000	C.18
DEK 5/8 MC SDR	1856750000	C.18
DEK 5/8 MM WS	2007130000	C.95
DEK 5/8 PLUS MC NE WS	1046350000	C.18
DEK 5/8 PLUS MC SDR	1046370000	C.18
DEK 5/8-11.5 MC NE WS	1341630000	C.19
DEK 6 FS 101-150	0468760101	C.11
DEK 6 FS 1-50	0468760001	C.11
DEK 6 FS 51-100	0468760051	C.11
DEK 6 FSZ 1-10	0133360001	C.11
DEK 6 FSZ 11-20	0133360011	C.11
DEK 6 FSZ 21-30	0133360021	C.11
DEK 6 FSZ 31-40	0133360031	C.11
DEK 6 FSZ 41-50	0133360041	C.11
DEK 6 FW 1,3,5...99	1358660000	C.11
DEK 6 FW 101-150	0468660101	C.11
DEK 6 FW 1-50	0468660001	C.11
DEK 6 FW 151-200	0468660151	C.11
DEK 6 FW 2,4,...100	1358760000	C.11
DEK 6 FW 201-250	0468660201	C.11
DEK 6 FW 251-300	0468660251	C.11
DEK 6 FW 301-350	0468660301	C.11
DEK 6 FW 351-400	0468660351	C.11
DEK 6 FW 451-500	0468660451	C.11
DEK 6 FW 501-550	0468660501	C.11
DEK 6 FW 51-100	0468660051	C.11
DEK 6 FW 551-600	0468660551	C.11
DEK 6 FW 601-650	0468660601	C.11
DEK 6 FW 651-700	0468660651	C.11
DEK 6 FW 701-750	0468660701	C.11
DEK 6 FW 751-800	0468660751	C.11
DEK 6 FW 801-850	0468660801	C.11
DEK 6 FW 851-900	0468660851	C.11
DEK 6 FW 901-950	0468660901	C.11
DEK 6 FW 951-999	0468660951	C.11
DEK 6 FW L,N,PE	0632560000	C.11
DEK 6 FWZ 101-110	0518960101	C.11
DEK 6 FWZ 1-10	0518960001	C.11
DEK 6 FWZ 11-20	0518960011	C.11
DEK 6 FWZ 21-30	0518960021	C.11
DEK 6 FWZ 31-40	0518960031	C.11
DEK 6 FWZ 41-50	0518960041	C.11
DEK 6 FWZ 51-60	0518960051	C.11
DEK 6 FWZ 61-70	0518960061	C.11
DEK 6 FWZ 71-80	0518960071	C.11
DEK 6 FWZ 81-90	0518960081	C.11
DEK 6 FWZ 91-100	0518960091	C.11
DEK 6 FWZ L1-ERDE I.KRE	0631961203	C.11
DEK 6 FWZ L1-PE	0631961187	C.11
DEK 6 GW -	1318061199	C.11
DEK 6 GW +	1318061198	C.11
DEK 6 GW 1	0526960001	C.11
DEK 6 GW 10	0526960010	C.11
DEK 6 GW 2	0526960002	C.11
DEK 6 GW 3	0526960003	C.11
DEK 6 GW 4	0526960004	C.11
DEK 6 GW 5	0526960005	C.11
DEK 6 GW 6	0526960006	C.11
DEK 6 GW 8	0526960008	C.11
DEK 6 GW ERDE	1318061202	C.11
DEK 6 GW PE	1318061187	C.11
DEK 6,5 FS 101-150	0468260101	C.11
DEK 6,5 FS 1-50	0468260001	C.11
DEK 6,5 FS 51-100	0468260051	C.11
DEK 6,5 FSZ 1-10	0407360001	C.11
DEK 6,5 FSZ 11-20	0407360011	C.11
DEK 6,5 FW 101-150	0468160101	C.11
DEK 6,5 FW 1-50	0468160001	C.11
DEK 6,5 FW 51-100	0468160051	C.11
DEK 6,5 FW L1-ERDE I.KR	0632161203	C.11
DEK 6,5 FWZ 1-10	0519060001	C.11
DEK 6,5 FWZ 11-20	0519060011	C.11
DEK 6,5 FWZ 21-30	0519060021	C.11
DEK 8 FS 1-50 TAMPOPR.	1653350001	C.11
DEK 8 FSZ 1-10	1289660001	C.11
DEK 8 FSZ 11-20	1289660011	C.11
DEK 8 FSZ 21-30	1289660021	C.11
DEK 8 FSZ 31-40	1289660031	C.11
DEK 8 FSZ 41-50	1289660041	C.11
DEK 8 FSZ 51-60	1289660051	C.11
DEK 8 FW 1-50 TAMPOPR.	1653340001	C.11
DEK 8 FW 51-100 TAMPOP.	1653340051	C.11
DEK 8 FWZ 1-10	1276960001	C.11
DEK 8 FWZ 11-20	1276960011	C.11
DEK 8 FWZ 21-30	1276960021	C.11
DEK 8 FWZ 31-40	1276960031	C.11
DEK 8 FWZ 41-50	1276960041	C.11
DEK 8 FWZ 51-60	1276960051	C.11
DEK-A 5/8 MM WS	2448860000	C.95
DKB CC 15/45	1341170000	E.52
DKB CC 15/60	1341150000	E.56
DKB CC 27/18	1341140000	E.49
DKB CC 30/60	1341130000	E.57
DKB CC 43/70	1500340000	E.58
DKB CC 85/27	1226620000	E.50
DKB CC 85/54	1175850000	E.55
DKB CC DIA 30	1341180000	E.59
DMC 12/27 MC NE GE	1018190000	E.7
DMC 12/27 MC NE WS	1016030000	E.7
DMC 12/27 MC SDR	1038830000	E.7

E

Type	Order No.	Page
EL 100 MM GE 30M	2006730000	E.64
EL 100 MM SI 30M	2006710000	E.64
EL 100 MM WS 30M	2006720000	E.64
EL 12 MM GE 30M	2006580000	E.64
EL 12 MM SI 30M	2006560000	E.64
EL 12 MM WS 30M	2006570000	E.64
EL 15 MM GE 30M	2006600000	E.64
EL 15 MM SI 30M	2006610000	E.64
EL 15 MM WS 30M	2006590000	E.64
EL 27 MM GE 30M	2006640000	E.64
EL 27 MM SI 30M	2006620000	E.64
EL 27 MM WS 30M	2006630000	E.64
EL 38 MM GE 30M	2006670000	E.64
EL 38 MM SI 30M	2006650000	E.64
EL 38 MM WS 30M	2006660000	E.64
EL 60 MM GE 30M	2006700000	E.64
EL 60 MM SI 30M	2006680000	E.64
EL 60 MM WS 30M	2006690000	E.64
ELS 16/40 K MC NE WS	1411800000	C.92
ELS 16/40 K MC NE WS	1411800000	D.19
ELS 16/40 MC NE GE	1045630000	C.88
ELS 16/40 MC NE GE	1045630000	C.92
ELS 16/40 MC NE GE	1045630000	D.19
ELS 16/40 MC NE GE	1045630000	D.22
ELS 16/40 MC NE WS	1045620000	C.88
ELS 16/40 MC NE WS	1045620000	C.92
ELS 16/40 MC NE WS	1045620000	D.19
ELS 16/40 MC NE WS	1045620000	D.22
ELS 16/40 MC SDR	1045690000	C.92
ELS 16/40 MC SDR	1045690000	D.19
ELS 16/40 MM GE	2005260000	C.88
ELS 16/40 MM GE	2005260000	C.95
ELS 16/40 MM GE	2005260000	D.22
ELS 16/40 MM GE	2005260000	E.64
ELS 16/40 MM WS	2005200000	C.88
ELS 16/40 MM WS	2005200000	C.95
ELS 16/40 MM WS	2005200000	D.22
ELS 16/40 MM WS	2005200000	E.64
ELS 6/30 K MC NE WS	1191390000	C.91
ELS 6/30 K MC NE WS	1191390000	D.19
ELS 6/30 MC NE GE	1045580000	C.86
ELS 6/30 MC NE GE	1045580000	C.91
ELS 6/30 MC NE GE	1045580000	D.19
ELS 6/30 MC NE GE	1045580000	D.21
ELS 6/30 MC NE WS	1045570000	C.86
ELS 6/30 MC NE WS	1045570000	C.91
ELS 6/30 MC NE WS	1045570000	D.19
ELS 6/30 MC NE WS	1045570000	D.21
ELS 6/30 MC SDR	1045660000	C.91
ELS 6/30 MC SDR	1045660000	D.19
ELS 6/30 MM GE	2010620000	C.86
ELS 6/30 MM GE	2010620000	C.95
ELS 6/30 MM GE	2010620000	D.21
ELS 6/30 MM GE	2010620000	E.64
ELS 6/30 MM WS	2009980000	C.86
ELS 6/30 MM WS	2009980000	C.95
ELS 6/30 MM WS	2009980000	D.21
ELS 6/30 MM WS	2009980000	E.64
ELS 7/40 MC NE GE	1045650000	C.88
ELS 7/40 MC NE GE	1045650000	C.91
ELS 7/40 MC NE WS	1045640000	C.88
ELS 7/40 MC NE WS	1045640000	C.91
ELS 7/40 MC SDR	1045700000	C.91
ELS 8/20 MM GE	2005240000	C.95
ELS 8/20 MM GE	2005240000	D.21
ELS 8/20 MM GE	2005240000	E.64
ELS 8/20 MM WS	2005180000	C.95
ELS 8/20 MM WS	2005180000	D.21
ELS 8/20 MM WS	2005180000	E.64
EM 8/30	1806120000	C.86
EM 8/30	1806120000	C.91
EM 8/30	1806120000	D.19
ESG 10/17 MC NE WS	1856700000	E.22
ESG 10/17 MC SDR	1856710000	E.22
ESG 15/10 MC NE WS	2047360000	E.24
ESG 15/10 MC SDR	2047540000	E.24
ESG 5/10 MC NE WS	1919940000	E.9
ESG 5/10 MC SDR	1038840000	E.9
ESG 6.6/11 BHZ 5.00 SDR	1346330000	E.11
ESG 6.6/11 BHZ 5.00/02	1082490000	E.11
ESG 6.6/15 BHZ 5.00 SDR	1346320000	E.12
ESG 6.6/15 BHZ 5.00/03	1082520000	E.12
ESG 6.6/20 BHZ 5.00 SDR	1221520000	E.12
ESG 6.6/20 BHZ 5.00/04	1082540000	E.12
ESG 6/15 F MC NE WS	1136810000	E.10
ESG 6/15 K MC NE GE	1880130000	E.9
ESG 6/15 K MC NE WS	1880100000	E.9
ESG 6/15 K MC SDR	1880090000	E.9
ESG 6/15 RIDER MC NE GE	1378710000	E.10
ESG 6/15 RIDER MC NE WS	1881280000	E.10
ESG 6/15 RIDER MC SDR	1881290000	E.10
ESG 6/17 K MC NE GE	1880110000	E.11
ESG 6/17 K MC NE WS	1880120000	E.11
ESG 6/17 K MC SDR	1880080000	E.11
ESG 6/17 MM GE	2005110000	E.62
ESG 6/17 MM GR	2005120000	E.62
ESG 6/17 MM SW	2005130000	E.62
ESG 6/17 MM WS	2005100000	E.62
ESG 7/20 SIRIUS MC NE GE	1736181687	D.21
ESG 7/20 SIRIUS MC NE GE	1736181687	E.13
ESG 7/20 SIRIUS MC NE GE	1736181687	E.46
ESG 7/20 SIRIUS MC NE TU	1736181696	D.21
ESG 7/20 SIRIUS MC NE TU	1736181696	E.13
ESG 7/20 SIRIUS MC NE WS	1736181044	D.21
ESG 7/20 SIRIUS MC NE WS	1736181044	D.21
ESG 7/20 SIRIUS MC NE WS	1736181044	E.13
ESG 7/20 SIRIUS SDR	1766650000	E.13
ESG 8/10 ASI MC NE WS	1736190000	E.13
ESG 8/10 ASI MC SDR	1770470000	E.13
ESG 8/11 MC NE WS	1897570000	E.14
ESG 8/11 MC SDR	1038850000	E.14
ESG 8/13.5/43.3 SAI AU	1912130000	E.14
ESG 8/13.5/43.3 SAI SDR	1038860000	E.14
ESG 8/17 L MC NE WS	1890470000	E.15
ESG 8/17 L MC SDR	1038870000	E.15
ESG 8/17 MC NE WS	1674740000	E.15
ESG 8/17 MC SDR	1674750000	E.15
ESG 8/17 SCHS MC NE WS	1720610000	E.16
ESG 8/17 SCHS MC SDR	1766640000	E.16
ESG 8/17 SYS PRO M SDR	1755350000	E.16
ESG 8/17 SYS PRO M WS	1755340000	E.16
ESG 8/17 SYS PRO M WS	1755340000	E.46
ESG 8/19 MC NE WS	1652220000	E.17
ESG 8/19 MC SDR	1652230000	E.17
ESG 8/20 MM GE	2005150000	E.62
ESG 8/20 MM GR	2005160000	E.62
ESG 8/20 MM SW	2005170000	E.62
ESG 8/20 MM WS	2005140000	E.62
ESG 9/10 MC NE WS	1775910000	E.17
ESG 9/10 MC SDR	1038880000	E.17
ESG 9/11 K MC NE WS	1857440000	E.18
ESG 9/11 K MC SDR	1857450000	E.18
ESG 9/17 K MC NE GE	1753500000	E.19
ESG 9/17 K MC NE WS	1674760000	D.16
ESG 9/17 K MC NE WS	1674760000	E.19
ESG 9/17 K MC SDR	1674770000	E.19
ESG 9/17 MC NE WS	1724760000	E.19
ESG 9/17 MC SDR	1770480000	E.19
ESG 9/17 MM GE	2005210000	E.62
ESG 9/17 MM GR	2005230000	E.62
ESG 9/17 MM SW	2005250000	E.62
ESG 9/17 MM WS	2005190000	E.62
ESG 9/17.7 K MC NE WS	2047430000	E.18
ESG 9/17.7 K MC SDR	2047550000	E.18
ESG 9/20 L MC NE GE	1010860000	E.20
ESG 9/20 L MC NE WS	1890460000	E.20
ESG 9/20 L MC SDR	1968140000	E.20
ESG 9/20 MC NE GE	1766160000	E.20
ESG 9/20 MC NE TK	1866690000	E.20
ESG 9/20 MC NE WS	1609940000	E.20
ESG 9/20 MC SDR	1609950000	E.20
ESG 9/20 O.F MC NE WS	1770500000	E.21
ESG 9/20 O.F MC SDR	1770510000	E.21
ESG 9/20 UNI MC NE WS	1856720000	E.21
ESG 9/20 UNI MC SDR	1856730000	E.21
ESG 9/26 SCM ECO MC NE GE	1520990000	E.24
ESG 9/26 SCM ECO MC NE GR	1521000000	E.24
ESG 9/26 SCM ECO MC NE WS	1520980000	E.24
ESG 9/26 SCM ECO MC SDR	1525800000	E.24
ESG 9/6 MC NE WS	1888360000	E.22
ESG 9/6 MC SDR	1038940000	E.22
ESG X20 10/7 MC NE BL	1026560000	E.23
ESG X20 10/7 MC NE OR	1026580000	E.23
ESG X20 10/7 MC NE RT	1026570000	E.23
ESG X20 10/7 MC NE WS	1026550000	E.23
ESG X20 10/7 MC SDR	1038930000	E.23
ESG X20 MC NE BL	1001150001	E.23
ESG X20 MC NE OR	1001160001	E.23
ESG X20 MC NE RT	1001170001	E.23
ESG X20 MC NE WS	1001140001	E.23
ESG X20 MC SDR	1038890000	E.23
ESG-M 8/20 MC NE WS	1027290000	E.25
ESG-M 8/20 MC SDR	1038910000	E.25
ESG-M 9/17 MC NE WS	1027280000	E.25
ESG-M 9/17 MC SDR	1038920000	E.25
ESO 5 DIN A4 GE	1631350000	C.88
ESO 5 DIN A4 GE	1631350000	D.22
ESO 5 DIN A4 WS	1607710000	C.88
ESO 5 DIN A4 WS	1607710000	D.22
ESO 5 P DIN A4 GE	1670380000	C.88
ESO 5 P DIN A4 GE	1670380000	D.22
ESO 5 P DIN A4 WS	1670370000	C.88
ESO 5 P DIN A4 WS	1670370000	D.22
ESO 5 S DIN A4 WS	1631920000	C.88
ESO 7 DIN A4 GE	1634780000	C.86
ESO 7 DIN A4 GE	1634780000	C.86
ESO 7 DIN A4 GE	1634780000	C.89
ESO 7 DIN A4 GE	1634780000	D.21
ESO 7 DIN A4 WS	1607720000	C.86
ESO 7 DIN A4 WS	1607720000	C.86

Type	Order No.	Page
ESO 7 DIN A4 WS	1607720000	C.89
ESO 7 DIN A4 WS	1607720000	D.21
ESO 7 P DIN A4 GE	1670400000	C.86
ESO 7 P DIN A4 GE	1670400000	C.86
ESO 7 P DIN A4 GE	1670400000	C.89
ESO 7 P DIN A4 GE	1670400000	D.21
ESO 7 P DIN A4 WS	1670390000	C.86
ESO 7 P DIN A4 WS	1670390000	C.86
ESO 7 P DIN A4 WS	1670390000	C.89
ESO 7 P DIN A4 WS	1670390000	D.21
ESO 8/20 DIN A4 GE	1919900000	D.21
ESO 8/20 DIN A4 WS	1919890000	D.21
ESO 8/20 P DIN A4 GE	1919880000	D.21
ESO 8/20 P DIN A4 WS	1919870000	D.21
ESO/SCHS1 500X12,5X0,3	0139000000	E.45
ET S7-12/50 GE-A4	1804480000	E.68
ET S7-12/50-TU-A4	1865440000	E.68
ET S7-200-TU-A4-1	1045500000	E.68
ET S7-200-TU-A4-2	1045490000	E.68
ET S7-300-GE-A4-1	1821020000	E.68
ET S7-300-GE-A4-2	1847650000	E.68
ET S7-300-TU-A4-1	1865450000	E.68
ET S7-300-TU-A4-2	1865460000	E.68
ET S7-400-GE-A4-1	1821040000	E.68
ET S7-400-GE-A4-2	1821030000	E.68
ET S7-400-GE-A4-3	1847640000	E.68
ET S7-400-TU-A4-1	1865470000	E.68
ET S7-400-TU-A4-2	1865480000	E.68
ET S7-400-TU-A4-3	1865490000	E.68
ETO CC 15/17 TRANSPAR.	1880850000	E.37
ETO CC 15/27 TRANSPAR.	1880810000	E.37
ETO CC 15/49 TRANSPAR.	1880830000	E.38
ETO CC 15/60 TRANSPAR.	1880840000	E.39
ETO CC 30/60 TRANSPAR.	1934440000	E.40
ETO SM 22/22 TRANSPAR.	1880720000	E.28
ETO SM 27/12,5	1720580000	E.29
ETO SM 27/18 TRANSPAR.	1720590002	E.29
ETO SM 27/27	1805840000	E.30
ETO SM 27/8	1720570000	E.28

H

Type	Order No.	Page
HS 0.8-2.4/25 MM W	2437470000	D.33
HS 0.8-2.4/25 MM Y	2437480000	D.33
HS 0.8-2.4/50 MM W	2437490000	D.33
HS 0.8-2.4/50 MM Y	2437500000	D.33
HS 1.0-3.2/25 MM W	2437510000	D.33
HS 1.0-3.2/25 MM Y	2437520000	D.33
HS 1.0-3.2/50 MM W	2437530000	D.33
HS 1.0-3.2/50 MM Y	2437540000	D.33
HS 1.6-4.8/25 MM W	2437550000	D.33
HS 1.6-4.8/25 MM Y	2437560000	D.33
HS 1.6-4.8/50 MM W	2437570000	D.33
HS 1.6-4.8/50 MM Y	2437580000	D.33
HS 12.7-38.1/25 MM W	2437590000	D.33
HS 12.7-38.1/25 MM Y	2437600000	D.33
HS 12.7-38.1/50 MM W	2437610000	D.33
HS 12.7-38.1/50 MM Y	2437620000	D.33
HS 2.1-6.4/25 MM W	2437630000	D.33
HS 2.1-6.4/25 MM Y	2437640000	D.33
HS 2.1-6.4/50 MM W	2437650000	D.33
HS 2.1-6.4/50 MM Y	2437660000	D.33
HS 3.2-9.5/25 MM W	2437670000	D.33
HS 3.2-9.5/25 MM Y	2437680000	D.33
HS 3.2-9.5/50 MM W	2437690000	D.33
HS 3.2-9.5/50 MM Y	2437700000	D.33
HS 4.2-12.7/25 MM W	2437710000	D.33
HS 4.2-12.7/25 MM Y	2437720000	D.33
HS 4.2-12.7/50 MM W	2437730000	D.33
HS 4.2-12.7/50 MM Y	2437740000	D.33
HS 6.4-19.1/25 MM W	2437750000	D.33
HS 6.4-19.1/25 MM Y	2437760000	D.33
HS 6.4-19.1/50 MM W	2437770000	D.33
HS 6.4-19.1/50 MM Y	2437780000	D.33
HS 8.5-25.4/25 MM W	2437790000	D.33
HS 8.5-25.4/25 MM Y	2437800000	D.33
HS 8.5-25.4/50 MM W	2437810000	D.33
HS 8.5-25.4/50 MM Y	2437820000	D.33
HS-HF 1.2-2.4/25 MM W	2437830000	D.34
HS-HF 1.2-2.4/25 MM Y	2437840000	D.34
HS-HF 1.2-2.4/50 MM W	2437850000	D.34
HS-HF 1.2-2.4/50 MM Y	2437860000	D.34
HS-HF 1.6-3.2/25 MM W	2437870000	D.34
HS-HF 1.6-3.2/25 MM Y	2437880000	D.34
HS-HF 1.6-3.2/50 MM W	2437890000	D.34
HS-HF 1.6-3.2/50 MM Y	2437900000	D.34
HS-HF 12.7-25.4/25 MM W	2437910000	D.34
HS-HF 12.7-25.4/25 MM Y	2437920000	D.34
HS-HF 12.7-25.4/50 MM W	2437930000	D.34
HS-HF 12.7-25.4/50 MM Y	2437940000	D.34
HS-HF 19.5-38.1/25 MM W	2437950000	D.34
HS-HF 19.5-38.1/25 MM Y	2437960000	D.34
HS-HF 19.5-38.1/50 MM W	2437970000	D.34
HS-HF 19.5-38.1/50 MM Y	2437980000	D.34
HS-HF 2.4-4.8/25 MM W	2437990000	D.34
HS-HF 2.4-4.8/25 MM Y	2438000000	D.34
HS-HF 2.4-4.8/50 MM W	2438010000	D.34
HS-HF 2.4-4.8/50 MM Y	2438020000	D.34
HS-HF 3.2-6.4/25 MM W	2438040000	D.34
HS-HF 3.2-6.4/25 MM Y	2438050000	D.34
HS-HF 3.2-6.4/50 MM W	2438060000	D.34
HS-HF 3.2-6.4/50 MM Y	2438070000	D.34
HS-HF 4.8-9.5/25 MM W	2438090000	D.34
HS-HF 4.8-9.5/25 MM Y	2438100000	D.34
HS-HF 4.8-9.5/50 MM W	2438110000	D.34
HS-HF 4.8-9.5/50 MM Y	2438120000	D.34
HS-HF 6.4-12.7/25 MM W	2438140000	D.34
HS-HF 6.4-12.7/25 MM Y	2438150000	D.34
HS-HF 6.4-12.7/50 MM W	2438160000	D.34
HS-HF 6.4-12.7/50 MM Y	2438170000	D.34
HS-HF 9.5-19.1/25 MM W	2438190000	D.34
HS-HF 9.5-19.1/25 MM Y	2438200000	D.34
HS-HF 9.5-19.1/50 MM W	2438210000	D.34
HS-HF 9.5-19.1/50 MM Y	2438220000	D.34
HSS 0.8-2.4 EL W13M	1489620000	D.36
HSS 0.8-2.4 EL W30M	1505840000	D.36
HSS 0.8-2.4 EL Y13M	1489530000	D.36
HSS 0.8-2.4 EL Y30M	1505760000	D.36
HSS 1.0-3.2 EL W13M	1489630000	D.36
HSS 1.0-3.2 EL W30M	1505850000	D.36
HSS 1.0-3.2 EL Y13M	1489540000	D.36
HSS 1.0-3.2 EL Y30M	1505770000	D.36
HSS 1.6-4.8 EL W13M	1489640000	D.36
HSS 1.6-4.8 EL W30M	1505860000	D.36
HSS 1.6-4.8 EL Y13M	1489550000	D.36
HSS 1.6-4.8 EL Y30M	1505780000	D.36
HSS 2.1-6.4 EL W13M	1489650000	D.36
HSS 2.1-6.4 EL W30M	1505870000	D.36
HSS 2.1-6.4 EL Y13M	1489560000	D.36
HSS 2.1-6.4 EL Y30M	1505790000	D.36
HSS 3.2-9.5 EL W13M	1489660000	D.36
HSS 3.2-9.5 EL W30M	1505880000	D.36
HSS 3.2-9.5 EL Y13M	1489570000	D.36
HSS 3.2-9.5 EL Y30M	1505800000	D.36
HSS 4.2-12.7 EL W13M	1489670000	D.36
HSS 4.2-12.7 EL W30M	1505890000	D.36
HSS 4.2-12.7 EL Y13M	1489580000	D.36
HSS 4.2-12.7 EL Y30M	1505810000	D.36
HSS 6.4-19.1 EL W13M	1489680000	D.36
HSS 6.4-19.1 EL W30M	1505900000	D.36
HSS 6.4-19.1 EL Y13M	1489590000	D.36
HSS 6.4-19.1 EL Y30M	1505820000	D.36
HSS 8.5-25.4 EL W30M	1505910000	D.36
HSS 8.5-25.4 EL Y30M	1505830000	D.36
HSS-HF 1 17.0-23.0/25Y	1962030000	D.35
HSS-HF 1 17.0-23.0/50Y	1961960000	D.35
HSS-HF 1.2-2.4 EL B30M	1562840000	D.38
HSS-HF 1.2-2.4 EL G30M	1562940000	D.38
HSS-HF 1.2-2.4 EL R30M	1562740000	D.38
HSS-HF 1.2-2.4 EL W13M	1423330000	D.37
HSS-HF 1.2-2.4 EL W30M	1513240000	D.38
HSS-HF 1.2-2.4 EL Y13M	1423220000	D.37
HSS-HF 1.2-2.4 EL Y30M	1513140000	D.38
HSS-HF 1.6-3.2 EL B30M	1562850000	D.38
HSS-HF 1.6-3.2 EL G30M	1562950000	D.38
HSS-HF 1.6-3.2 EL R30M	1562750000	D.38
HSS-HF 1.6-3.2 EL W13M	1423340000	D.37
HSS-HF 1.6-3.2 EL W30M	1513250000	D.38
HSS-HF 1.6-3.2 EL Y13M	1423230000	D.37
HSS-HF 1.6-3.2 EL Y30M	1513150000	D.38
HSS-HF 1/2 8.0-11.0/25Y	1962010000	D.35
HSS-HF 1/2 8.0-11.0/50Y	1961940000	D.35
HSS-HF 1/4 4.2-5.8/25Y	1961990000	D.35
HSS-HF 1/4 4.2-5.8/50Y	1961920000	D.35
HSS-HF 1/8 1.8-2.8/25Y	1961970000	D.35
HSS-HF 1/8 1.8-2.8/50Y	1961900000	D.35
HSS-HF 12.7-25.4 EL B30M	1562930000	D.38
HSS-HF 12.7-25.4 EL G30M	1563040000	D.38
HSS-HF 12.7-25.4 EL R30M	1562830000	D.38
HSS-HF 12.7-25.4 EL W10M	1423410000	D.37
HSS-HF 12.7-25.4 EL Y10M	1423290000	D.37
HSS-HF 12.7-25.4EL W30M	1513330000	D.38
HSS-HF 12.7-25.4EL Y30M	1513230000	D.38
HSS-HF 2.4-4.8 EL B30M	1562870000	D.38
HSS-HF 2.4-4.8 EL G30M	1562970000	D.38
HSS-HF 2.4-4.8 EL R30M	1562770000	D.38
HSS-HF 2.4-4.8 EL W13M	1423350000	D.37
HSS-HF 2.4-4.8 EL W30M	1513270000	D.38
HSS-HF 2.4-4.8 EL Y13M	1423240000	D.37
HSS-HF 2.4-4.8 EL Y30M	1513170000	D.38
HSS-HF 3.2-6.4 EL B30M	1562880000	D.38
HSS-HF 3.2-6.4 EL G30M	1562980000	D.38
HSS-HF 3.2-6.4 EL R30M	1562780000	D.38
HSS-HF 3.2-6.4 EL W13M	1423360000	D.37
HSS-HF 3.2-6.4 EL W30M	1513280000	D.38
HSS-HF 3.2-6.4 EL Y13M	1423250000	D.37
HSS-HF 3.2-6.4 EL Y30M	1513180000	D.38
HSS-HF 3/16 2.8-4.2/25Y	1961980000	D.35
HSS-HF 3/16 2.8-4.2/50Y	1961910000	D.35
HSS-HF 3/4 11.0-17.0/25Y	1962020000	D.35
HSS-HF 3/4 11.0-17.0/50Y	1961950000	D.35
HSS-HF 3/8 5.8-8.0/25Y	1962000000	D.35
HSS-HF 3/8 5.8-8.0/50Y	1961930000	D.35
HSS-HF 4.8-9.5 EL B 30M	1562890000	D.38
HSS-HF 4.8-9.5 EL G 30M	1562990000	D.38
HSS-HF 4.8-9.5 EL R 30M	1562790000	D.38
HSS-HF 4.8-9.5 EL W13M	1423370000	D.37
HSS-HF 4.8-9.5 EL W30M	1513290000	D.38
HSS-HF 4.8-9.5 EL Y13M	1423260000	D.37
HSS-HF 4.8-9.5 EL Y30M	1513190000	D.38
HSS-HF 6.4-12.7 EL B30M	1562900000	D.38
HSS-HF 6.4-12.7 EL G30M	1563020000	D.38
HSS-HF 6.4-12.7 EL R30M	1562800000	D.38
HSS-HF 6.4-12.7 EL W13M	1423380000	D.37
HSS-HF 6.4-12.7 EL W30M	1513300000	D.38
HSS-HF 6.4-12.7 EL Y13M	1423270000	D.37
HSS-HF 6.4-12.7 EL Y30M	1513200000	D.38
HSS-HF 9.5-19.1 EL B30M	1562920000	D.38
HSS-HF 9.5-19.1 EL G30M	1563030000	D.38
HSS-HF 9.5-19.1 EL R30M	1562820000	D.38
HSS-HF 9.5-19.1 EL W10M	1423390000	D.37
HSS-HF 9.5-19.1 EL W30M	1513320000	D.38
HSS-HF 9.5-19.1 EL Y10M	1423280000	D.37
HSS-HF 9.5-19.1 EL Y30M	1513220000	D.38

I

Type	Order No.	Page
INLAY CC-M 10/30	1483770000	E.51
INLAY CC-M 15/45	1341090000	E.52
INLAY CC-M 15/45	1341090000	E.53
INLAY CC-M 15/60	1341080000	E.56
INLAY CC-M 15/60	1341080000	E.56
INLAY CC-M 18/52	1390430000	E.54
INLAY CC-M 27/18	1341040000	E.49
INLAY CC-M 27/18	1341040000	E.49
INLAY CC-M 27/70	1500290000	E.58
INLAY CC-M 30/60	1341070000	E.57
INLAY CC-M 30/60	1341070000	E.57
INLAY CC-M 43/70	1500300000	E.58
INLAY CC-M 58/35	1415950000	E.51
INLAY CC-M 58/35	1415950000	E.52
INLAY CC-M 70/48	1415940000	E.53
INLAY CC-M 70/48	1415940000	E.54
INLAY CC-M 85/27	1341050000	E.50
INLAY CC-M 85/27	1341050000	E.50
INLAY CC-M 85/54	1341030000	E.55
INLAY CC-M 85/54	1341030000	E.55
INLAY CC-M DIA 30	1341100000	E.59
INLAY CC-M UNIVERSAL	1341120000	D.25
INLAY CC-M UNIVERSAL	1341120000	D.25
INLAY CC-M UNIVERSAL	1341120000	D.26
INLAY CC-M UNIVERSAL	1341120000	E.49
INLAY CC-M UNIVERSAL	1341120000	E.49
INLAY CC-M UNIVERSAL	1341120000	E.50
INLAY CC-M UNIVERSAL	1341120000	E.50
INLAY CC-M UNIVERSAL	1341120000	E.52
INLAY CC-M UNIVERSAL	1341120000	E.53
INLAY CC-M UNIVERSAL	1341120000	E.55
INLAY CC-M UNIVERSAL	1341120000	E.55
INLAY CC-M UNIVERSAL	1341120000	E.56
INLAY CC-M UNIVERSAL	1341120000	E.56
INLAY CC-M UNIVERSAL	1341120000	E.57
INLAY CC-M UNIVERSAL	1341120000	E.57
INLAY CC-M UNIVERSAL	1341120000	E.59
INLAY SFX-M 11/60	1341110000	D.25
INLAY SFX-M 11/60	1341110000	D.25
INLAY SFX-M 11/60	1341110000	D.26
INLAY SFX-M 17/60	1500330000	D.26

K

Type	Order No.	Page
KABELBINDERZANGE RT-1	1296000000	D.98
KABELBINDERZANGE RT-1	1296000000	D.99
KSW 2,5 < 100MM SONDDR.	1629920000	E.73
KSW 2,5 < 150MM SONDDR.	1629940000	E.73
KSW 2,5 24/3,5 1-24	1652250001	E.73
KSW 2,5 8/5,08 1-8	1630100001	E.73
KSW 2,5 8/5,08 9-16	1630100009	E.73
KSW 2.5 < 50MM SDR	1629900000	E.73
KSW 2.5 EL WS 50M	1812660000	E.73
KSW 4 < 100MM SDR	1629930000	E.73
KSW 4 < 150MM SONDDR.	1629950000	E.73
KSW 4 < 50MM SDR	1629910000	E.73
KSW 4 10/5,08 W 1-10	1705820001	E.73
KSW 4 16/3,5 1-16	1630150001	E.73
KSW 4 16/5,08 1-16	1630160001	E.73
KSW 4 16/5,08 17-32	1630160017	E.73
KSW 4 24/5,08 1-24	1630180001	E.73
KSW 4 8/5,08 1-8	1630200001	E.73
KSW 4.0 EL WS 50M	1812670000	E.73

L

Type	Order No.	Page
LM MT300 105/105 SI	1975160000	E.69
LM MT300 105/148 SI	1724170001	E.69
LM MT300 105/148 WS	1724171044	E.69
LM MT300 12/6 GE	1882910000	E.69
LM MT300 15/4.6 GE	1724141687	E.69
LM MT300 15/4.6 SI	1724140001	E.69
LM MT300 15/4.6 WS	1724141044	E.69
LM MT300 15/6 GE	1686361687	E.69
LM MT300 15/6 SI	1686360001	E.69
LM MT300 15/6 WS	1686361044	E.69
LM MT300 15/9 GE	1882890000	E.69
LM MT300 17/6 GE	1835820000	E.69
LM MT300 17/9 GE	1724151687	E.69
LM MT300 17/9 SI	1724150001	E.69
LM MT300 17/9 WS	1724151044	E.69
LM MT300 18/6.5 GE	1749321687	E.69
LM MT300 18/6.5 SI	1749320001	E.69
LM MT300 18/6.5 WS	1749321044	E.69
LM MT300 19/6.3 GE	1835830000	E.69
LM MT300 20/8 GE	1686381687	E.69
LM MT300 20/8 SI	1686380001	E.69
LM MT300 20/8 WS	1686381044	E.69
LM MT300 202/12 GE	1915320000	E.69
LM MT300 210/148 GE	1724181687	E.69
LM MT300 210/148 SI	1724180001	E.69
LM MT300 210/297 GE	1686441687	E.69
LM MT300 210/297 SI	1686440001	E.69
LM MT300 210/297 WS	1686441044	E.69
LM MT300 25.4/12.7 GE	1686391687	E.69
LM MT300 25.4/12.7 SI	1686390001	E.69
LM MT300 25.4/12.7 WS	1686391044	E.69
LM MT300 26/10 GE	1686401687	E.69
LM MT300 26/10 SI	1686400001	E.69
LM MT300 26/10 WS	1686401044	E.69
LM MT300 27/18 SI	1873810000	E.69
LM MT300 27/8 GE	1861510000	E.69
LM MT300 30/20 GE	1724161687	E.69
LM MT300 30/20 SI	1724160001	E.69
LM MT300 30/20 WS	1724161044	E.69
LM MT300 35/16 WS	1140460000	E.69
LM MT300 40/6 WS	1760461044	E.69
LM MT300 56/22 GE	1686421687	E.69
LM MT300 56/22 SI	1686420001	E.69
LM MT300 56/22 WS	1686421044	E.69
LM MT300 60/36 GE	1686431687	E.69
LM MT300 60/36 SI	1686430001	E.69
LM MT300 60/36 WS	1686431044	E.69
LM MT300 89/34 WS	1003400000	E.69
LM WO 15/140 WS	1773880000	D.41
LM WO 15/70 WS	1759871044	D.41
LM WO 18/34 GE	1695711687	D.41
LM WO 18/34 WS	1695711044	D.41
LM WO 23/55 GE	1695721687	D.41
LM WO 23/55 WS	1695721044	D.41
LM WO 25.4/57 GE	1768390000	D.41
LM WO 25.4/57 WS	1768380000	D.41
LM WO 25.4/95 WS	1768400000	D.41
LM WO 25/140 GE	1712491687	D.41
LM WO 25/140 WS	1712491044	D.41
LM WO 25/68 GE	1695731687	D.41
LM WO 25/68 WS	1695731044	D.41
LM WO 36/93 GE	1695741687	D.41
LM WO 36/93 WS	1695741044	D.41
LM WO 37/25 GE	1768430000	D.41
LOGIM.-KH. ES DUNKELBEIGE	1631640003	E.41
LOGIM.-KH. ES GRAU	1631640002	E.41
LOGIM.-KH. ES SCHWARZ	1631640001	E.41
LOGIMARKHALTER 1/2 GRAU	1675130002	E.41
LOGIMARKHALTER 1/2 SW	1675130001	E.41
LOGIMARK-KARTENHALTER	1603290000	E.41

M

Type	Order No.	Page
MARKO-C. 25X25X25 B/DR.	1700530001	E.71
MARKO-C. 50X50X50 B/DR.	1700540001	E.71
MARKO-C.100X100X100 B/DR	1700550001	E.71
MARKO-C.200X200X200 B/DR	1700560001	E.71
MCP AP BASIC	1139880000	F.13
MCP AP LABLES	1924370000	F.11
MCP AP LABLES	1924370000	F.13
MCP AP PLUS	1924360000	F.11
MCP AP SF4-6	1924310000	F.11
MCP AP SF4-6	1924310000	F.13
MCP BASIC 2	2438520000	F.13
MCP BASIC 2 COVER	2493080000	F.13
MCP EP	1935130000	F.13
MCP EP SFC 3	1058090000	F.11
MCP EP SFC 3	1058090000	F.13
MCP PLUS 2	2438510000	F.11
MCP PLUS 2 COVER	2493070000	F.11
MF 10/10 MC NE WS	1856760000	C.49
MF 10/10 MC SDR	1856770000	C.49
MF 10/5 CABUR MC NE WS	1854510000	C.45
MF 10/5 MC NE WS	1677160000	C.44
MF 10/5 MC SDR	1677170000	C.44
MF 10/6 MC NE WS	1677220000	C.47
MF 10/6 MC SDR	1677230000	C.47
MF 10/8 MC NE WS	1868440000	C.48
MF 10/8 MC SDR	1868430000	C.48
MF 12/5 CABUR MC NE WS	1854520000	C.46
MF 12/5 MC CABUR SDR	1038670000	C.46
MF 12/5 MC NE WS	1677180000	C.45
MF 12/5 MC SDR	1677190000	C.45
MF 4/5.2 MC NE WS	1907530000	C.46
MF 4/5.2 MC SDR	1038690000	C.46
MF 5/10 MC NE WS	1954050000	C.49
MF 5/10 MC SDR	1038730000	C.49
MF 5/12 MC NE WS	1250090000	C.50
MF 5/12 MC SDR	1250080000	C.50
MF 5/3.5 MC NE WS	1521010000	C.42
MF 5/3.5 MC SDR	1525840000	C.42
MF 5/4 MC NE WS	1877690000	C.42
MF 5/4 MC SDR	1877670000	C.42

Type	Order No.	Page
MF 5/5 MC NE WS	1816250000	C.43
MF 5/5 MC SDR	1816320000	C.43
MF 5/6 MC NE WS	1816260000	C.47
MF 5/6 MC SDR	1816330000	C.47
MF 5/7.5 MC NE WS	1877680000	C.48
MF 5/7.5 MC SDR	1877660000	C.48
MF 8/5 MC NE WS	1677140000	C.44
MF 8/5 MC SDR	1677150000	C.44
MF-ABB 12/5 MC NE WS	2047320000	C.64
MF-ABB 12/5 MC SDR	2047460000	C.64
MF-ABB 12/6 MC NE WS	2047340000	C.64
MF-ABB 12/6 MC SDR	2047510000	C.64
MF-ABB 12/8 MC NE WS	2047350000	C.65
MF-ABB 12/8 MC SDR	2047520000	C.65
MFF 10/6 MC NE GE	1957340000	C.51
MFF 10/6 MC NE WS	1856780000	C.51
MFF 10/6 MC SDR	1856790000	C.51
MFF 9/4 MC NE WS	1877720000	C.51
MFF 9/4 MC SDR	1877700000	C.51
MF-SI 10/5 MC NE WS	1889190000	C.61
MF-SI 10/5 MC SDR	1889170000	C.61
MF-SI 10/5-6.5 MC NE WS	1889800000	C.63
MF-SI 10/5-6.5 MC SDR	1889790000	C.63
MF-SI 10/6 MC NE WS	1889260000	C.62
MF-SI 10/6 MC SDR	1889250000	C.62
MF-SI 7/5-6.5 MC NE WS	1889780000	C.63
MF-SI 7/5-6.5 MC SDR	1889770000	C.63
MF-SI 8/5 MC NE WS	1889180000	C.61
MF-SI 8/5 MC SDR	1886270000	C.61
MF-SI 8/6 MC NE WS	1889240000	C.62
MF-SI 8/6 MC SDR	1889230000	C.62
MF-W 5/5 MINI MC NE BL	1924270000	C.57
MF-W 5/5 MINI MC NE GE	1924280000	C.57
MF-W 5/5 MINI MC NE GN	1924290000	C.57
MF-W 5/5 MINI MC NE RT	1924260000	C.57
MF-W 5/5 MINI MC NE WS	1816240000	C.57
MF-W 5/5 MINI MC SDR	1816310000	C.57
MF-W 9/3.5F MC NE WS	1521040000	C.52
MF-W 9/3.5F MC SDR	1525830000	C.52
MF-W 9/4 MC NE WS	1877730000	C.52
MF-W 9/4 MC SDR	1877710000	C.52
MF-W 9/4.2F MC NE WS	1011430000	C.53
MF-W 9/4.2F MC SDR	1038750000	C.53
MF-W 9/5 MC NE GE	1027310000	C.54
MF-W 9/5 MC NE WS	1816270000	C.54
MF-W 9/5 MC SDR	1816340000	C.54
MF-W 9/5.2F MC NE WS	1011410000	C.55
MF-W 9/5.2F MC SDR	1038760000	C.55
MF-W 9/5F MC NE GR	1045980000	C.54
MF-W 9/5F MC NE WS	1816280000	C.54
MF-W 9/5F MC SDR	1816350000	C.54
MF-W 9/6 MC NE WS	1816290000	C.56
MF-W 9/6 MC SDR	1816360000	C.56
MF-W 9/6.2F MC NE WS	1011420000	C.56
MF-W 9/6.2F MC SDR	1038770000	C.56
MF-WO 12/5 MC NE WS	1692270000	C.59
MF-WO 12/5 MC SDR	1692280000	C.59
MF-WO 12/6 MC NE WS	1692290000	C.60
MF-WO 12/6 MC SDR	1692300000	C.60
MF-WO 5/5 MC NE WS	1716800000	C.58
MF-WO 5/5 MC SDR	1716810000	C.58
MF-WO 9/5 MC NE WS	1716840000	C.58
MF-WO 9/5 MC SDR	1716850000	C.58
MF-WO 9/6 MC NE WS	1716820000	C.59
MF-WO 9/6 MC SDR	1716830000	C.59
M-PRINT PRO	1905490000	B.12
M-PRINT PRO	1905490000	F.9

P

Type	Order No.	Page
PAGETAB 15/9	1686160000	E.71
PAGETAB 19/11	1686170000	E.71
PAGETAB 20/8	1686180000	E.71
PAGETAB 28/11	1686190000	E.71
PAGETAB 38/11	1686200000	E.71
PAGETAB 56/22	1686210000	E.71
PAGETAB 60/35	1686220000	E.71
P-CLEANER	1924330000	F.11
P-CLEANER	1924330000	F.13
P-Ink 2.0	1924340000	F.11
P-Ink 2.0	1924340000	F.13
PJ ADV TNAW	1338710000	F.9
PJ ADV TNTK INK C	1338680000	F.9
PJ ADV TNTK INK K	1338690000	F.9
PJ ADV TNTK INK M	1338670000	F.9
PJ ADV TNTK INK SET	1338720000	F.9
PJ ADV TNTK INK Y	1338650000	F.9
PJ PRO TINTENSET FARBE	1027110000	F.9
PJ PRO TNAW	1024140000	F.9
PJ PRO TNTK INK C	1027050000	F.9
PJ PRO TNTK INK K	1027040000	F.9
PJ PRO TNTK INK M	1027060000	F.9
PJ PRO TNTK INK Y	1027070000	F.9
PLOTTER PEN 0.25 P-INK	1920640000	F.11
PLOTTER PEN 0.25 P-INK	1920640000	F.13
PLOTTER PEN 0.35 P-INK	1920650000	F.11
PLOTTER PEN 0.35 P-INK	1920650000	F.13
PLOTTER PEN 0.50 P-INK	1005710000	F.11
PLOTTER PEN 0.50 P-INK	1005710000	F.13
PLOTTER PEN 0.70 P-INK	1011450000	F.11
PLOTTER PEN 0.70 P-INK	1011450000	F.13
Plotterpen 0,18	1768570000	F.11
Plotterpen 0,18	1768570000	F.13
Plotterpen 0,25	1768540000	F.11
Plotterpen 0,25	1768540000	F.13
Plotterpen 0,35	1768550000	F.11
Plotterpen 0,35	1768550000	F.13
Plotterpen 0,5	1768560000	F.11
Plotterpen 0,5	1768560000	F.13
PLOTTERPEN 0,7	1011440000	F.11
PLOTTERPEN 0,7	1011440000	F.13
PM 2.7/2.6 MC NE WS	1323710000	C.34
PM 2.7/2.6 MC SDR	1323700000	C.34
PRIMER CC-M	2068020000	D.25
PRIMER CC-M	2068020000	D.25
PRIMER CC-M	2068020000	D.26
PRIMER CC-M	2068020000	D.26
PRIMER CC-M	2068020000	E.49
PRIMER CC-M	2068020000	E.49
PRIMER CC-M	2068020000	E.50
PRIMER CC-M	2068020000	E.50
PRIMER CC-M	2068020000	E.51
PRIMER CC-M	2068020000	E.51
PRIMER CC-M	2068020000	E.52
PRIMER CC-M	2068020000	E.52
PRIMER CC-M	2068020000	E.53
PRIMER CC-M	2068020000	E.53
PRIMER CC-M	2068020000	E.54
PRIMER CC-M	2068020000	E.54
PRIMER CC-M	2068020000	E.55
PRIMER CC-M	2068020000	E.55
PRIMER CC-M	2068020000	E.56
PRIMER CC-M	2068020000	E.56
PRIMER CC-M	2068020000	E.57
PRIMER CC-M	2068020000	E.57
PRIMER CC-M	2068020000	E.58
PRIMER CC-M	2068020000	E.58
PRIMER CC-M	2068020000	E.59
PRINTJET ADVANCED 115V	1338700000	F.9
PRINTJET ADVANCED 230V	1324380000	F.9

R

Type	Order No.	Page
Reiniger 2000 25ml	1772130000	F.11
Reiniger 2000 25ml	1772130000	F.13
RIBBON HSS HF EL 40/300	1426210000	D.36
RIBBON HSS HF EL 40/300	1426210000	D.36
RIBBON HSS HF EL 40/300	1426210000	D.37
RIBBON HSS HF EL 40/300	1426210000	D.37
RIBBON HSS HF EL 40/300	1426210000	D.38
RIBBON HSS HF EL 40/300	1426210000	F.15
RIBBON HSS HF EL 40/300	1426210000	F.17
RIBBON MM 110/360 SW	2005070000	D.41
RIBBON MM 110/360 SW	2005070000	D.42
RIBBON MM 110/360 SW	2005070000	D.42
RIBBON MM 110/360 SW	2005070000	E.64
RIBBON MM 110/360 SW	2005070000	E.65
RIBBON MM 110/360 SW	2005070000	E.65
RIBBON MM 110/360 SW	2005070000	E.66
RIBBON MM 110/360 SW	2005070000	E.66
RIBBON MM 110/360 SW	2005070000	E.67
RIBBON MM 110/360 SW	2005070000	E.67
RIBBON MM 110/360 SW	2005070000	F.15
RIBBON MM 110/360 SW	2005070000	F.17
RIBBON MM 80/300 WS	2005040000	E.62
RIBBON MM 80/300 WS	2005040000	E.62
RIBBON MM 80/300 WS	2005040000	E.63
RIBBON MM 80/300 WS	2005040000	E.63
RIBBON MM 80/300 WS	2005040000	F.15
RIBBON MM 80/300 WS	2005040000	F.17
RIBBON MM 80/360 SW	2005080000	C.95
RIBBON MM 80/360 SW	2005080000	D.29
RIBBON MM 80/360 SW	2005080000	D.29
RIBBON MM 80/360 SW	2005080000	D.30
RIBBON MM 80/360 SW	2005080000	E.62
RIBBON MM 80/360 SW	2005080000	E.62
RIBBON MM 80/360 SW	2005080000	E.63
RIBBON MM 80/360 SW	2005080000	E.63
RIBBON MM 80/360 SW	2005080000	E.63
RIBBON MM 80/360 SW	2005080000	E.64
RIBBON MM 80/360 SW	2005080000	E.64
RIBBON MM 80/360 SW	2005080000	E.67
RIBBON MM 80/360 SW	2005080000	F.15
RIBBON MM 80/360 SW	2005080000	F.17
RIBBON MM-HS 60/300 SW	2448880000	D.33
RIBBON MM-HS 60/300 SW	2448880000	D.33
RIBBON MM-HS 60/300 SW	2448880000	D.34
RIBBON MM-HS 60/300 SW	2448880000	D.34
RIBBON MM-HS 60/300 SW	2448880000	D.35
RIBBON MM-HS 60/300 SW	2448880000	D.35
RIBBON MM-HS 60/300 SW	2448880000	F.15
RIBBON MM-HS 60/300 SW	2448880000	F.17
RIBBON MM-HS 60/300 SW	2448880000	F.19
RIBBON MM-TB 25/360 SW	2005090000	C.95
RIBBON MM-TB 25/360 SW	2005090000	F.15

S

Type	Order No.	Page
SCHS1	0138900000	E.45
SCHS2	0337400000	E.16
SCHS2	0337400000	E.46
SCHS2 K	1720600000	E.16
SCHS3 K	1753480000	E.13
SCHS3 K	1753480000	E.46
SCHS4 K	1753460000	E.13
SCHS4 K	1753460000	E.46
SCHT 5	0292460000	C.88
SCHT 5	0292460000	C.92
SCHT 5	0292460000	D.19
SCHT 5 S	1631930000	C.88
SCHT 5 S	1631930000	C.91
SCHT 7	0517960000	C.89
SCT 4 ,6/127 C	1699800000	D.97
SCT 4,6/266C	1699900000	D.97
SCT 4,6/360 C	1699910000	D.97
SCT 4,6/520	1699920000	D.97
SCT 4,6/679	1699930000	D.97
SCT 4,6/838	1699940000	D.97
SCT 4.6/201 C	1699810000	D.97
SCT-C 4.6/100	1015220000	D.97
SCT-C 4.6/125	1015230000	D.97
SCT-C 4.6/150	1015240000	D.97
SCT-C 4.6/200	1015250000	D.97
SCT-C 4.6/360	1015270000	D.97
SCT-C 4.6/520	1015280000	D.97
SCT-C 4.6/680	1015290000	D.97
SCT-C 4.6/840	1015300000	D.97
SCT-C 7.9/200	1015310000	D.97
SCT-C 7.9/360	1015320000	D.97
SCT-C 7.9/520	1015330000	D.97
SCT-C 7.9/680	1015340000	D.97
SCT-C 7.9/840	1015350000	D.97
SERV-P. DIAM16 L1 SW/WS	1707350001	E.71
SERV-P. DIAM16 L2 SW/WS	1707350002	E.71
SERV-P. DIAM16 L3 SW/WS	1707350003	E.71
SERV-P. DIAM16 N BL/WS	1707350004	E.71
SERV-P. DIAM16 PE GE/GN	1707350006	E.71
SERV-P.DIAM16ERDE GE/GN	1707350005	E.71
SF 0/12 MC NE BL V2	1919220000	D.7
SF 0/12 MC NE GE V2	1919210000	D.7
SF 0/12 MC NE RT V2	1919230000	D.7
SF 0/12 MC NE WS V2	1919240000	D.7
SF 0/12 MC SDR V2	1919250000	D.7
SF 0/21 MC NE BL V2	1918510000	D.7
SF 0/21 MC NE GE V2	1918480000	D.7
SF 0/21 MC NE RT V2	1918490000	D.7
SF 0/21 MC NE WS V2	1918500000	D.7
SF 0/21 MC SDR V2	1918470000	D.7
SF 00/12 MC NE BL V2	1919270000	D.7
SF 00/12 MC NE GE V2	1919260000	D.7
SF 00/12 MC NE RT V2	1919280000	D.7
SF 00/12 MC NE WS V2	1919290000	D.7
SF 00/12 MC SDR V2	1919300000	D.7
SF 00/21 MC NE BL V2	1918590000	D.7
SF 00/21 MC NE GE V2	1918560000	D.7
SF 00/21 MC NE RT V2	1918570000	D.7
SF 00/21 MC NE WS V2	1918580000	D.7
SF 00/21 MC SDR V2	1918530000	D.7
SF 1/12 MC NE BL V2	1919360000	D.7
SF 1/12 MC NE GE V2	1919340000	D.7
SF 1/12 MC NE RT V2	1919320000	D.7
SF 1/12 MC NE WS V2	1919390000	D.7
SF 1/12 MC SDR V2	1919420000	D.7
SF 1/21 MC NE BL V2	1918620000	D.7
SF 1/21 MC NE GE V2	1918610000	D.7
SF 1/21 MC NE RT V2	1918600000	D.7
SF 1/21 MC NE WS V2	1918630000	D.7
SF 1/21 MC SDR V2	1918640000	D.7
SF 2/12 MC NE BL V2	1919480000	D.7
SF 2/12 MC NE GE V2	1919470000	D.7
SF 2/12 MC NE RT V2	1919460000	D.7
SF 2/12 MC NE WS V2	1919490000	D.7
SF 2/12 MC SDR V2	1919500000	D.7
SF 2/21 MC NE BL V2	1918700000	D.7
SF 2/21 MC NE GE V2	1918660000	D.7
SF 2/21 MC NE RT V2	1918670000	D.7
SF 2/21 MC NE WS V2	1918690000	D.7
SF 2/21 MC SDR V2	1918650000	D.7
SF 3/12 MC NE BL V2	1919550000	D.7
SF 3/12 MC NE GE V2	1919520000	D.7
SF 3/12 MC NE RT V2	1919530000	D.7
SF 3/12 MC NE WS V2	1919540000	D.7
SF 3/12 MC SDR V2	1919510000	D.7
SF 3/21 MC NE BL V2	1918920000	D.7
SF 3/21 MC NE GE V2	1918890000	D.7
SF 3/21 MC NE RT V2	1918900000	D.7
SF 3/21 MC NE WS V2	1918910000	D.7
SF 3/21 MC SDR V2	1918880000	D.7
SF 4.5/21 MC NE BL V2	1919030000	D.7
SF 4.5/21 MC NE GE V2	1919000000	D.7
SF 4.5/21 MC NE RT V2	1919010000	D.7
SF 4.5/21 MC NE WS V2	1919020000	D.7
SF 4.5/21 MC SDR V2	1918990000	D.7
SF 4/12 MC NE BL V2	1919590000	D.7
SF 4/12 MC NE GE V2	1919580000	D.7
SF 4/12 MC NE RT V2	1919570000	D.7
SF 4/12 MC NE WS V2	1919600000	D.7
SF 4/12 MC SDR V2	1919610000	D.7
SF 4/21 MC NE BL V2	1919090000	D.7
SF 4/21 MC NE GE V2	1919060000	D.7
SF 4/21 MC NE RT V2	1919070000	D.7
SF 4/21 MC NE WS V2	1919080000	D.7
SF 4/21 MC SDR V2	1919050000	D.7
SF 5/12 MC NE BL V2	1919630000	D.7
SF 5/12 MC NE GE V2	1919620000	D.7
SF 5/12 MC NE RT V2	1919640000	D.7
SF 5/12 MC NE WS V2	1919650000	D.7
SF 5/12 MC SDR V2	1919660000	D.7
SF 5/21 MC NE BL V2	1919150000	D.7
SF 5/21 MC NE GE V2	1919120000	D.7
SF 5/21 MC NE RT V2	1919130000	D.7
SF 5/21 MC NE WS V2	1919140000	D.7
SF 5/21 MC SDR V2	1919110000	D.7
SF 6/21 MC NE BL V2	1919200000	D.7
SF 6/21 MC NE GE V2	1919170000	D.7
SF 6/21 MC NE RT V2	1919180000	D.7
SF 6/21 MC NE WS V2	1919190000	D.7
SF 6/21 MC SDR V2	1919160000	D.7
SFC 0/12 MC NE BL	1813170000	D.11
SFC 0/12 MC NE GE	1813160000	D.11
SFC 0/12 MC NE RT	1813150000	D.11
SFC 0/12 MC NE WS	1813130000	D.11
SFC 0/12 MC SDR	1813180000	D.11
SFC 0/21 MC NE BL	1813220000	D.11
SFC 0/21 MC NE GE	1813210000	D.11
SFC 0/21 MC NE RT	1813200000	D.11
SFC 0/21 MC NE WS	1813190000	D.11
SFC 0/21 MC SDR	1813230000	D.11
SFC 0/30 MC NE BL	1813270000	D.11
SFC 0/30 MC NE GE	1813260000	D.11
SFC 0/30 MC NE RT	1813250000	D.11
SFC 0/30 MC NE WS	1813240000	D.11
SFC 0/30 MC SDR	1813280000	D.11
SFC 1/12 MC NE BL	1747320002	D.11
SFC 1/12 MC NE GE	1747320004	D.11
SFC 1/12 MC NE RT	1747320003	D.11
SFC 1/12 MC NE WS	1747320001	D.11
SFC 1/12 MC SDR	1752720000	D.11
SFC 1/21 MC NE BL	1779080002	D.11
SFC 1/21 MC NE GE	1779080004	D.11
SFC 1/21 MC NE RT	1779080003	D.11
SFC 1/21 MC NE WS	1779080001	D.11
SFC 1/21 MC SDR	1779090000	D.11
SFC 1/30 MC NE BL	1805720000	D.11
SFC 1/30 MC NE GE	1805730000	D.11
SFC 1/30 MC NE RT	1805740000	D.11
SFC 1/30 MC NE WS	1805760000	D.11
SFC 1/30 MC SDR	1805750000	D.11
SFC 2.5/12 MC NE BL	1062030000	D.11
SFC 2.5/12 MC NE GE	1062010000	D.11
SFC 2.5/12 MC NE RT	1062020000	D.11
SFC 2.5/12 MC NE WS	1062000000	D.11
SFC 2.5/12 MC SDR	1062040000	D.11
SFC 2.5/21 MC NE BL	1062090000	D.11
SFC 2.5/21 MC NE GE	1062070000	D.11
SFC 2.5/21 MC NE RT	1062080000	D.11
SFC 2.5/21 MC NE WS	1062050000	D.11
SFC 2.5/21 MC SDR	1062110000	D.11
SFC 2/12 MC NE BL	1758320002	D.11
SFC 2/12 MC NE GE	1758320004	D.11
SFC 2/12 MC NE RT	1758320003	D.11
SFC 2/12 MC NE WS	1758320001	D.11
SFC 2/12 MC SDR	1763480000	D.11
SFC 2/21 MC NE BL	1805770000	D.11
SFC 2/21 MC NE GE	1805780000	D.11
SFC 2/21 MC NE RT	1805790000	D.11
SFC 2/21 MC NE WS	1805810000	D.11
SFC 2/21 MC SDR	1805800000	D.11
SFC 2/30 MC NE BL	1805820000	D.11
SFC 2/30 MC NE GE	1805830000	D.11
SFC 2/30 MC NE RT	1805850000	D.11
SFC 2/30 MC NE WS	1805870000	D.11
SFC 2/30 MC SDR	1805860000	D.11
SFC 3/12 MC NE BL	1025250000	D.11
SFC 3/12 MC NE GE	1025230000	D.11
SFC 3/12 MC NE RT	1025240000	D.11
SFC 3/12 MC NE WS	1025220000	D.11
SFC 3/12 MC SDR	1025550000	D.11
SFC 3/21 MC NE BL	1025300000	D.11
SFC 3/21 MC NE GE	1025270000	D.11
SFC 3/21 MC NE RT	1025290000	D.11
SFC 3/21 MC NE WS	1025260000	D.11
SFC 3/21 MC SDR	1025560000	D.11
SFC 3/30 MC NE BL	1025340000	D.11
SFC 3/30 MC NE GE	1025320000	D.11
SFC 3/30 MC NE RT	1025330000	D.11
SFC 3/30 MC NE WS	1025310000	D.11
SFC 3/30 MC SDR	1025570000	D.11
SFR 1/12 MC NE GE	1318650000	D.7
SFR 1/12 MC NE WS	1318640000	D.7
SFR 1/12 MC SDR	1318770000	D.7
SFR 1/21 MC NE GE	1318720000	D.7
SFR 1/21 MC SDR	1318810000	D.7
SFR 1/21MC NE WS	1318710000	D.7

Type	Order No.	Page
SFR 2/12 MC NE GE	1318670000	D.7
SFR 2/12 MC NE WS	1318660000	D.7
SFR 2/12 MC SDR	1318780000	D.7
SFR 2/21 MC NE GE	1318740000	D.7
SFR 2/21 MC NE WS	1318730000	D.7
SFR 2/21 MC SDR	1318820000	D.7
SFR 3/12 MC NE GE	1318690000	D.7
SFR 3/12 MC NE WS	1318680000	D.7
SFR 3/12 MC SDR	1318790000	D.7
SFR 3/21 MC NE GE	1318760000	D.7
SFR 3/21 MC NE WS	1318750000	D.7
SFR 3/21 MC SDR	1318830000	D.7
SF-TOOL 00-6	1950820000	D.7
SF-TOOL 1	1782970000	D.7
SF-TOOL 2-3	1782960000	D.7
SF-TOOL 4-5	1782980000	D.7
SF-Tool-Sortiment	1770080000	D.7
SFX 10/23 MC NE BL V2	1852400000	D.9
SFX 10/23 MC NE GE V2	1852360000	D.9
SFX 10/23 MC NE RT V2	1852370000	D.9
SFX 10/23 MC NE WS V2	1852390000	D.9
SFX 10/23 MC SDR V2	1852380000	D.9
SFX 10/60 S MC NE BL	1248840000	D.9
SFX 10/60 S MC NE GE	1248820000	D.9
SFX 10/60 S MC NE GE V0	2009900000	D.9
SFX 10/60 S MC NE RT	1248830000	D.9
SFX 10/60 S MC NE WS	1248810000	D.9
SFX 10/60 S MC NE WS V0	2009890000	D.9
SFX 10/60 S MC SDR	1248750000	D.9
SFX 11/60 MC NE BL	1051870000	D.9
SFX 11/60 MC NE GE	1860150000	D.9
SFX 11/60 MC NE GE V0	1076890000	D.9
SFX 11/60 MC NE RT	1963650000	D.9
SFX 11/60 MC NE WS	1860120000	D.9
SFX 11/60 MC NE WS V0	1432750000	D.9
SFX 11/60 MC SDR	1860140000	D.9
SFX 11/60 MM GE	2005400000	D.30
SFX 11/60 MM WS	2005340000	D.30
SFX 14/23 MC NE BL V2	1852450000	D.9
SFX 14/23 MC NE GE V2	1852410000	D.9
SFX 14/23 MC NE RT V2	1852420000	D.9
SFX 14/23 MC NE WS V2	1852440000	D.9
SFX 14/23 MC SDR V2	1852430000	D.9
SFX 30/60 MC NE BL	1369540000	D.9
SFX 30/60 MC NE GE	1083240000	D.9
SFX 30/60 MC NE RT	1369550000	D.9
SFX 30/60 MC NE WS	1083230000	D.9
SFX 30/60 MC SDR	1083260000	D.9
SFX 30/60 MM GE	2005420000	D.30
SFX 30/60 MM WS	2005360000	D.30
SFX 9/24 MC NE BL V2	1852500000	D.9
SFX 9/24 MC NE GE V2	1852460000	D.9
SFX 9/24 MC NE RT V2	1852470000	D.9
SFX 9/24 MC NE WS V2	1852490000	D.9
SFX 9/24 MC SDR V2	1852480000	D.9
SFX 9/24 MM GE	2005380000	D.30
SFX 9/24 MM WS	2005320000	D.30
SFX 9/24 S MC NE BL	1323480000	D.9
SFX 9/24 S MC NE GE	1323450000	D.9
SFX 9/24 S MC NE GE V0	2009940000	D.9
SFX 9/24 S MC NE RT	1323470000	D.9
SFX 9/24 S MC NE WS	1323440000	D.9
SFX 9/24 S MC NE WS V0	2009930000	D.9
SFX 9/24 S MC SDR	1323490000	D.9
SFX 9/40 S MC NE BL	1248790000	D.9
SFX 9/40 S MC NE GE	1248770000	D.9
SFX 9/40 S MC NE GE V0	2009920000	D.9
SFX 9/40 S MC NE RT	1248780000	D.9
SFX 9/40 S MC NE WS	1248760000	D.9
SFX 9/40 S MC NE WS V0	2009910000	D.9
SFX 9/40 S MC SDR	1248740000	D.9
SFX-M 11/60 AL	1327780000	D.25
SFX-M 11/60 ST	1327790000	D.25
SFX-M 11/60 ST SDR	1474430000	D.25
SFX-M 11/60-5 AL	1422560000	D.25
SFX-M 11/60-5 AL SDR	1474440000	D.25
SFX-M 11/60-5 ST	1422570000	D.25
SFX-M 12/40-5 AL	1500230000	D.26
SFX-M 12/40-5 AL SDR	1505210000	D.26
SFX-M 12/40-5 ST	1500240000	D.26
SFX-M 12/40-5 ST SDR	1505220000	D.26
SFX-M 17/60-5 AL	1500250000	D.26
SFX-M 17/60-5 AL SDR	1505230000	D.26
SFX-M 17/60-5 ST	1500270000	D.26
SFX-M 17/60-5 ST SDR	1505240000	D.26
SM 18/9.5 K MC NE GE	1248590000	E.27
SM 18/9.5 K MC NE GR	1248610000	E.27
SM 18/9.5 K MC NE WS	1248580000	E.27
SM 18/9.5 K MC SDR	1248550000	E.27
SM 18/9.5 MM GE	2006240000	E.62
SM 18/9.5 MM GR	2006260000	E.62
SM 18/9.5 MM SW	2006200000	E.62
SM 18/9.5 MM WS	2006220000	E.62
SM 19/42 K MC NE GE	1248630000	E.27
SM 19/42 K MC NE GR	1248640000	E.27
SM 19/42 K MC NE WS	1248620000	E.27
SM 19/42 K MC SDR	1248560000	E.27
SM 22/22 K MC NE GE	1131830000	E.28
SM 22/22 K MC NE GR	1014650000	E.28
SM 22/22 K MC NE SI	1877590000	E.28
SM 22/22 K MC NE WS	1877570000	E.28
SM 22/22 K MC SDR	1877580000	E.28
SM 27/12.5 K MC NE GE	1131810000	E.29
SM 27/12.5 K MC NE GR	1027830000	E.29
SM 27/12.5 K MC NE SI	1713720000	E.29
SM 27/12.5 K MC NE WS	1699880000	E.29
SM 27/12.5 K MC SDR	1699890000	E.29
SM 27/12.5 MC NE GE	1131860000	E.29
SM 27/12.5 MC NE GR	1079490000	E.29
SM 27/12.5 MC NE SI	1713700000	E.29
SM 27/12.5 MC NE WS	1699840000	E.29
SM 27/12.5 MM GE	2006510000	E.62
SM 27/12.5 MM GN	2006550000	E.62
SM 27/12.5 MM GR	2006520000	E.62
SM 27/12.5 MM RT	2006540000	E.62
SM 27/12.5 MM SW	2006530000	E.62
SM 27/12.5 MM WS	2006500000	E.62
SM 27/12.5 SDR	1699850000	E.29
SM 27/18 K MC NE GE	1915340000	E.29
SM 27/18 K MC NE GR	1073340000	E.29
SM 27/18 K MC NE RT	1906120000	E.29
SM 27/18 K MC NE SI	1713760000	E.29
SM 27/18 K MC NE WS	1707270000	E.29
SM 27/18 K MC SDR	1707280000	E.29
SM 27/18 MC NE GE	1131850000	E.29
SM 27/18 MC NE GR	1014640000	E.29
SM 27/18 MC NE RT	1906110000	E.29
SM 27/18 MC NE SI	1713740000	E.29
SM 27/18 MC NE WS	1699860000	E.29
SM 27/18 MC SDR	1699870000	E.29
SM 27/18 MM GE	2006300000	E.62
SM 27/18 MM GN	2006380000	E.62
SM 27/18 MM GR	2006340000	E.62
SM 27/18 MM RT	2006360000	E.62
SM 27/18 MM SW	2006320000	E.62
SM 27/18 MM WS	2006280000	E.62
SM 27/18-22 K MC NE GR	1428180000	E.31
SM 27/18-22 K MC NE WS	1428170000	E.31
SM 27/18-22 K MC SDR	1433870000	E.31
SM 27/18-22 MM GE	2005810000	E.63
SM 27/18-22 MM GN	2005920000	E.63
SM 27/18-22 MM GR	2005860000	E.63
SM 27/18-22 MM RT	2005900000	E.63
SM 27/18-22 MM SW	2005880000	E.63
SM 27/18-22 MM WS	2005840000	E.63
SM 27/27 K MC NE GE	1131800000	E.30
SM 27/27 K MC NE GR	1079520000	E.30
SM 27/27 K MC NE SI	1782990000	E.30
SM 27/27 K MC NE WS	1783000000	E.30
SM 27/27 K MC SDR	1783010000	E.30
SM 27/27 MC NE GE	1131840000	E.30
SM 27/27 MC NE GR	1079510000	E.30
SM 27/27 MC NE SI	1773230000	E.30
SM 27/27 MC NE WS	1773220000	E.30
SM 27/27 MC SDR	1773240000	E.30
SM 27/8 K MC NE GE	1131820000	E.28
SM 27/8 K MC NE GR	1079480000	E.28
SM 27/8 K MC NE SI	1771930000	E.28
SM 27/8 K MC NE WS	1812630000	E.28
SM 27/8 K SONDERDRUCK	1713690000	E.28
SM 27/8 MC NE GE	1131870000	E.28
SM 27/8 MC NE GR	1079470000	E.28
SM 27/8 MC NE SI	1713680000	E.28
SM 27/8 MC NE WS	1699820000	E.28
SM 27/8 MC SDR	1699830000	E.28
SM 27/8 MM GE	2006420000	E.62
SM 27/8 MM GN	2006490000	E.62
SM 27/8 MM GR	2006480000	E.62
SM 27/8 MM RT	2006460000	E.62
SM 27/8 MM SW	2006440000	E.62
SM 27/8 MM WS	2006400000	E.62
SM 36/18-30 K MC NE GR	1428200000	E.31
SM 36/18-30 K MC NE WS	1428190000	E.31
SM 36/18-30 K MC SDR	1433860000	E.31
SM 36/18-30 MM GE	2006080000	E.63
SM 36/18-30 MM GN	2006180000	E.63
SM 36/18-30 MM GR	2006120000	E.63
SM 36/18-30 MM RT	2006160000	E.63
SM 36/18-30 MM SW	2006140000	E.63
SM 36/18-30 MM WS	2006100000	E.63
SM 37.5/17 MC NE GR	1336720000	E.30
SM 37.5/17 MC NE WS	1336710000	E.30
SM 37.5/17 MC SDR	1336680000	E.30
SM 42/42-30 K MC NE GE	1323540000	E.32
SM 42/42-30 K MC NE GR	1323550000	E.32
SM 42/42-30 K MC NE WS	1323530000	E.32
SM 42/42-30 K MC SDR	1323620000	E.32
SM 44/44-21 MC NE GE	1323580000	E.32
SM 44/44-21 MC NE GR	1323600000	E.32
SM 44/44-21 MC NE WS	1323570000	E.32
SM 44/44-21 MC SDR	1323640000	E.32
SM 45/45-24 MC NE GE	1248660000	E.33
SM 45/45-24 MC NE GR	1248670000	E.33
SM 45/45-24 MC NE WS	1248650000	E.33
SM 45/45-24 MC SDR	1248570000	E.33
SM 46/46-30 MC NE GE	1323510000	E.33
SM 46/46-30 MC NE GR	1323520000	E.33
SM 46/46-30 MC NE WS	1323500000	E.33
SM 46/46-30 MC SDR	1323610000	E.33
SM DIA 60-22 K MC NE GE	1323750000	E.34
SM DIA 60-22 MC SDR	1323740000	E.34
SM DIA 60-22 MM GE	2006060000	E.63
SM-H 27/12.5 SW	1716640000	E.29
SM-H 27/12.5 SW	1716640000	E.29
SM-H 27/18 SW	1716630000	E.29
SM-H 27/18 SW	1716630000	E.29
SM-H 27/27 SW	1782710000	E.30
SM-H 27/27 SW	1782710000	E.30
SNAPMARK I	1805880000	C.87
STI Waterproof schwarz	0508401694	F.11
STI Waterproof schwarz	0508401694	F.13
STR 5 F.SCHT 5	0294000000	C.88
STR 5 S F.SCHT 5 S	1631940000	C.88
STR 7 F.SCHT 7	0515300000	C.86
STR 7 F.SCHT 7	0515300000	C.89
STR CC 15/17 TRANSPARENT	1888310000	E.37
STR CC 15/27 TRANSPARENT	1888290000	E.37
STR CC 15/49 TRANSPARENT	1888300000	E.38
STR CC 15/60 TRANSPARENT	1888280000	E.39
STR CC 30/60 TRANSPARENT	1934450000	E.40
STR F.SCHS	0139200000	E.45
SYMBOL-P. 25X25X25 B/DR	1741090000	E.71
SYMBOL-P. 50X50X50 B/DR	1741100000	E.71
SYMBOL-P. 75X75X75 B/DR	1741110000	E.71

T

Type	Order No.	Page
TABPACK 14X9	1686110000	E.70
TABPACK 15X6	1686120000	E.70
TABPACK 19X11 M. RAND	1686130000	E.70
TABPACK 21X8	1686140000	E.70
TABPACK FLAG 54/8 WS	1107340000	E.70
THM EL 100 GE 30M	1419980000	E.65
THM EL 100 SI 30M	1517270000	E.65
THM EL 100 WS 30M	1420010000	E.65
THM EL 30 GE 30M	1517190000	E.65
THM EL 30 SI 30M	1517200000	E.65
THM EL 30 WS 30M	1517180000	E.65
THM EL 50 GE 30M	1517230000	E.65
THM EL 50 SI 30M	1517240000	E.65
THM EL 50 WS 30M	1517220000	E.65
THM EL 60 SI 50M	1391400000	E.65
THM EL VIN 100 GE 30M	1463830000	E.65
THM EL VIN 12 GE 30M	1463800000	E.65
THM EL VIN 15 WS 2L 30M	1307670000	E.65
THM EL VIN 15 WS 5L 30M	1096170000	E.65
THM EL VIN 24 WS 3L 30M	1105550000	E.65
THM EL VIN 25 GE 30M	1463810000	E.65
THM EL VIN 38 WS 30M	1105560000	E.65
THM EL VIN 45 WS 30M	1474640000	E.65
THM EL VIN 50 GE 30M	1463820000	E.65
THM ESO 7 PA GE	1339580000	D.21
THM ESO 7 PA GE	1339580000	E.67
THM ESO 7 PA WS	1339570000	D.21
THM ESO 7 PA WS	1339570000	E.67
THM ET 200SP 12.8/31 GE	1487690000	E.67
THM ET 200SP 12.8/31 TU	1487680000	E.67
THM ET S7 1500 GE	1991670000	E.67
THM ET S7 1500 TU	1991680000	E.67
THM ET S7 1500-13 GE	2093070000	E.67
THM ET S7 1500-13 TU	2093010000	E.67
THM ET S7 300-1 GE	1161770000	E.67
THM ET S7 300-1 TU	1161750000	E.67
THM ET S7 300-2 GE	1161740000	E.67
THM ET S7 300-2 TU	1161730000	E.67
THM ET S7 50/12.5 GE	1161810000	E.67
THM ET S7 50/12.5 TU	1161790000	E.67
THM ET S7 50/25 GE	1095590000	E.67
THM ET S7 50/25 TU	1161780000	E.67
THM GEW 15/6 GE	1059790000	E.66
THM GEW 15/6 WS	1059780000	E.66
THM GEW 17/9 GE	1059810000	E.66
THM GEW 17/9 WS	1059800000	E.66
THM GEW 18/6 GE	1059830000	E.66
THM GEW 18/6 WS	1059820000	E.66
THM GEW 18/9 GE	1059850000	E.66
THM GEW 18/9 WS	1059840000	E.66
THM GEW 20/8 GE	1059880000	E.66
THM GEW 20/8 WS	1059870000	E.66
THM GEW FLAG 54/8 WS	1107350000	E.67
THM MMP	2430920000	F.15
THM MMP CASE	2457760000	F.15
THM MMP CUTTER	1331600000	F.15
THM MMP EXT.RH	1302920000	F.15
THM MMP PERFORATOR	1416330000	F.15
THM MT30x 101/150 SI/G	1778170000	E.66
THM MT30X 101/48 GE	1751821687	E.66
THM MT30X 101/48 SI	1751820001	E.66
THM MT30X 101/48 WS	1751821044	E.66
THM MT30X 101/74 GE	1061810000	E.66
THM MT30X 101/74 SI	1762960001	E.66
THM MT30X 101/74 WS	2455620000	E.66
THM MT30X 12/6 GE	1391390000	E.66
THM MT30X 15/4 GE	1072690000	E.66
THM MT30X 15/6 GE	1753231687	E.66
THM MT30X 15/6 SI	1753230001	E.66
THM MT30X 15/6 WS	1753231044	E.66
THM MT30X 15/9 GE	1058740000	E.66
THM MT30X 15/9 WS	1058750000	E.66
THM MT30X 16/7 GE	1852520000	E.66
THM MT30X 17/8 GE	1027620000	E.66
THM MT30X 17/9 GE	1856650000	E.66
THM MT30X 17/9 SI	1356500000	E.66
THM MT30X 17/9 WS	1968130000	E.66
THM MT30X 18/6 GE	1753271687	E.66
THM MT30X 18/6 SI	1753270001	E.66
THM MT30X 18/6 WS	1753271044	E.66
THM MT30X 18/9 GE	1753251687	E.66
THM MT30X 18/9 SI	1753250001	E.66
THM MT30X 18/9 WS	1753251044	E.66
THM MT30X 20/8 GE	1753241687	E.66
THM MT30X 20/8 WS	1753241044	E.66
THM MT30X 25/12 GE	1751751687	E.66
THM MT30X 25/12 SI	1751750001	E.66
THM MT30X 25/12 WS	1751751044	E.66
THM MT30X 26/10 WS	1751761044	E.66
THM MT30X 30/20 GE	1753261687	E.66
THM MT30X 45/23 GE	1751811687	E.66
THM MT30X 45/23 SI	1751810001	E.66
THM MT30X 45/23 WS	1751811044	E.66
THM MT30X 57/27 SI	1852540000	E.66
THM MT30X 65/35 GE	1751831687	E.66
THM MT30X 65/35 SI	1751830001	E.66
THM MT30X 65/35 WS	1751831044	E.66
THM MT30X 89/60 SI	1003410000	E.66
THM PLUS M	2448870000	F.17
THM WO 12/18 GE	1856630000	D.41
THM WO 12/18 WS	1856640000	D.41
THM WO 17.8/34 WS	1774380000	D.41
THM WO 24.5/62 WS	1109130000	D.41
THM WO 25.4/95.2 WS	1109140000	D.41
THM WO 25/140 GE	1751561687	D.41
THM WO 25/140 WS	1751561044	D.41
THM WO 25/76 GE	1774340000	D.41
THM WO 25/76 WS	1774350000	D.41
THM WO 33.5/93.1 GE	1774410000	D.41
THM WO 33.5/93.1 WS	1774400000	D.41
THM WO 50.8/150 GE	1109180000	D.41
THM WO 50.8/150 WS	1109150000	D.41
THM WO 51/36 WS	1934190000	D.41
THM WO T 24.5/100 WS	1003380000	D.42
THM WO T 24.5/62 WS	1003420000	D.42
THM WO VIN 12/18 WS	1382940000	D.42
THM WO VIN 17.8/34 WS	1382930000	D.42
THM WO VIN 24.5/100 WS	1391430000	D.42
THM WO VIN 24.5/62 WS	1391410000	D.42
THM WO VIN 49.5/57.1 WS	1882900000	D.42
THM-TWINMARK	1140490000	F.19
Tinte 2000 25ml	1772120000	F.11
Tinte 2000 25ml	1772120000	F.13
TM 0/12 HF/HB	1719760000	D.15
TM 0/18 HF/HB	1719770000	D.15
TM 0/18 TWIN HF/HB	1891810000	D.15
TM 1/12 HF/HB	1719780000	D.15
TM 1/18 HF/HB	1719790000	D.15
TM 1/18 TWIN HF/HB	1891780000	D.15
TM 2/12 HF/HB	1719800000	D.15
TM 2/18 HF/HB	1719810000	D.15
TM 200/15 V0	1798650000	D.17
TM 201/12 V0	1798640000	D.17
TM 201/15 V0	1798620000	D.17
TM 201/18 V0	1798600000	D.17
TM 201/20 V0	1798580000	D.17
TM 201/23 V0	1507060000	D.17
TM 201/30 V0	1874850000	D.17
TM 202/12 V0	1798560000	D.17
TM 202/15 V0	1798540000	D.17
TM 202/18 V0	1798530000	D.17
TM 202/20 V0	1798520000	D.17
TM 202/23 V0	1507070000	D.17
TM 202/30 V0	1874760000	D.17
TM 203/12 V0	1798510000	D.17
TM 203/15 V0	1798490000	D.17
TM 203/18 V0	1798480000	D.17
TM 203/20 V0	1798470000	D.17
TM 203/23 V0	1507080000	D.17
TM 203/30 V0	1874770000	D.17
TM 204/12 V0	1806180000	D.17
TM 204/15 V0	1806240000	D.17
TM 204/18 V0	1806300000	D.17
TM 204/20 V0	1806360000	D.17
TM 204/23 V0	1507090000	D.17
TM 204/30 V0	1874780000	D.17
TM 205/12 V0	1806190000	D.17
TM 205/15 V0	1806250000	D.17
TM 205/18 V0	1806310000	D.17
TM 205/20 V0	1806370000	D.17
TM 205/23 V0	1507100000	D.17
TM 205/30 V0	1874790000	D.17
TM 206/12 V0	1806200000	D.17
TM 206/15 V0	1806260000	D.17
TM 206/18 V0	1806320000	D.17
TM 206/20 V0	1806380000	D.17
TM 206/23 V0	1507110000	D.17
TM 206/30 V0	1874800000	D.17
TM 207/12 V0	1806210000	D.17

Type	Order No.	Page
TM 207/15 V0	1806270000	D.17
TM 207/18 V0	1806330000	D.17
TM 207/20 V0	1806390000	D.17
TM 207/23 V0	1507120000	D.17
TM 207/30 V0	1874820000	D.17
TM 3/12 HF/HB	1719820000	D.15
TM 3/18 HF/HB	1719830000	D.15
TM 4/12 HF/HB	1719840000	D.15
TM 4/18 HF/HB	1719850000	D.15
TM 5/12 HF/HB	1719860000	D.15
TM 5/18 HF/HB	1719870000	D.15
TM 6/12 HF/HB	1719880000	D.15
TM 6/18 HF/HB	1719890000	D.15
TMC 9/20	1724790000	E.21
TM-I 12 MC NE BL	1718411693	D.13
TM-I 12 MC NE GE	1718411687	D.13
TM-I 12 MC NE RT	1718411686	D.13
TM-I 12 MC NE WS	1718411044	D.13
TM-I 12 MC SDR	1718420000	D.13
TM-I 12 MM BL	2005890000	D.29
TM-I 12 MM GE	2005550000	D.29
TM-I 12 MM RT	2005730000	D.29
TM-I 12 MM WS	2005440000	D.29
TM-I 12/18 MC NE BL	1421160000	D.13
TM-I 12/18 MC NE GE	1409630000	D.13
TM-I 12/18 MC NE RT	1421170000	D.13
TM-I 12/18 MC NE WS	1323730000	D.13
TM-I 12/18 MC SDR	1323720000	D.13
TM-I 15 MC NE BL	1609981693	D.13
TM-I 15 MC NE GE	1609981687	D.13
TM-I 15 MC NE RT	1609981686	D.13
TM-I 15 MC NE WS	1609981044	D.13
TM-I 15 MC SDR	1609990000	D.13
TM-I 15 MM BL	2005910000	D.29
TM-I 15 MM GE	2005580000	D.29
TM-I 15 MM RT	2005760000	D.29
TM-I 15 MM WS	2005450000	D.29
TM-I 18 MC NE BL	1718431693	D.13
TM-I 18 MC NE GE	1718431687	D.13
TM-I 18 MC NE RT	1718431686	D.13
TM-I 18 MC NE WS	1718431044	D.13
TM-I 18 MC NE WS	1718431044	D.16
TM-I 18 MC SDR	1718440000	D.13
TM-I 18 MM BL	2005930000	D.29
TM-I 18 MM GE	2005610000	D.29
TM-I 18 MM RT	2005790000	D.29
TM-I 18 MM WS	2005470000	D.29
TM-I 20 MC NE BL	1680411693	D.13
TM-I 20 MC NE GE	1680411687	D.13
TM-I 20 MC NE RT	1680411686	D.13
TM-I 20 MC NE WS	1680411044	D.13
TM-I 20 MC SDR	1680420000	D.13
TM-I 20 MM BL	2005950000	D.29
TM-I 20 MM GE	2005640000	D.29
TM-I 20 MM RT	2005820000	D.29
TM-I 20 MM WS	2005490000	D.29
TM-I 23 MC NE BL	1428520000	D.13
TM-I 23 MC NE GE	1428490000	D.13
TM-I 23 MC NE RT	1428510000	D.13
TM-I 23 MC NE WS	1428480000	D.13
TM-I 23 MC SDR	1433880000	D.13
TM-I 23 MM BL	2005970000	D.29
TM-I 23 MM GE	2005670000	D.29
TM-I 23 MM RT	2005850000	D.29
TM-I 23 MM WS	2005510000	D.29
TM-I 30 MC NE BL	1876400000	D.13
TM-I 30 MC NE GE	1876370000	D.13
TM-I 30 MC NE RT	1876380000	D.13
TM-I 30 MC NE WS	1876390000	D.13
TM-I 30 MC SDR	1876320000	D.13
TM-I 30 MM BL	2005990000	D.29
TM-I 30 MM GE	2005700000	D.29
TM-I 30 MM RT	2005870000	D.29
TM-I 30 MM WS	2005530000	D.29
TMX 18 HF/HB	1748820000	D.15
TMX 30 V0	1866680000	D.17

V

VT SFX 10/23 MC NE GE V0	1727770004	D.9
VT SFX 10/23 MC NE WS V0	1727770001	D.9
VT SFX 14/23 MC NE GE V0	1689490004	D.9
VT SFX 14/23 MC NE WS V0	1689490001	D.9
VT SFX 9/24 MC NE GE V0	1727740004	D.9
VT SFX 9/24 MC NE WS V0	1727740001	D.9

W

WAD 12 MC B GE/SW	2445090000	C.83
WAD 12 MC NE GE	2445080000	C.83
WAD 12 MC NE WS	2445070000	C.83
WAD 12 MC SDR	2445100000	C.83
WAD 27 M. BL.	1062860000	C.85
WAD 27 NEUTRAL	1062960000	C.85
WAD 5 MC B GE/SW	1120450000	C.81
WAD 5 MC NE GE	1112920000	C.81
WAD 5 MC NE WS	1112910000	C.81
WAD 5 MC SDR	1112930000	C.81
WAD 8 MC B GE/SW	1120470000	C.82
WAD 8 MC NE GE	1112950000	C.82
WAD 8 MC NE WS	1112940000	C.82
WAD 8 MC SDR	1112970000	C.82
WKM 18/43	1610700000	C.92
WKM 18/43	1610700000	D.19
WKM 18/43	1610700000	D.22
WKM 8/20	1753490000	D.21
WKM 8/30	1631910000	C.91
WKM 8/30	1631910000	D.19
WKM 8/30	1631910000	D.21
WM 0/12 1.0-2.0 MM GE	2006250000	D.29
WM 0/12 1.0-2.0 MM WS	2006170000	D.29
WM 0/21 1.0-2.0 MM GE	2006090000	D.29
WM 0/21 1.0-2.0 MM WS	2006010000	D.29
WM 0/6 1.0-2.0 MM GE	2006410000	D.29
WM 0/6 1.0-2.0 MM WS	2006330000	D.29
WM 1/12 2.0-3.5 MM GE	2006270000	D.29
WM 1/12 2.0-3.5 MM WS	2006190000	D.29
WM 1/21 2.0-3.5 MM GE	2006110000	D.29
WM 1/21 2.0-3.5 MM WS	2006030000	D.29
WM 1/6 2.0-3.5 MM GE	2006430000	D.29
WM 1/6 2.0-3.5 MM WS	2006350000	D.29
WM 2/12 3.5-5.0 MM GE	2006290000	D.29
WM 2/12 3.5-5.0 MM WS	2006210000	D.29
WM 2/21 3.5-5.0 MM GE	2006130000	D.29
WM 2/21 3.5-5.0 MM WS	2006050000	D.29
WM 2/6 3.5-5.0 MM GE	2006450000	D.29
WM 2/6 3.5-5.0 MM WS	2006370000	D.29
WM 3/12 5.0-8.0 MM GE	2006310000	D.29
WM 3/12 5.0-8.0 MM WS	2006230000	D.29
WM 3/21 5.0-8.0 MM GE	2006150000	D.29
WM 3/21 5.0-8.0 MM WS	2006070000	D.29
WM 3/6 5.0-8.0 MM GE	2006470000	D.29
WM 3/6 5.0-8.0 MM WS	2006390000	D.29
WS 10/12 MC NE WS	1905970000	C.32
WS 10/12 MC SDR	1906060000	C.32
WS 10/15 MC NE WS	1854090000	C.33
WS 10/15 MC SDR	1854100000	C.33
WS 10/3.5 PLUS MC NE WS	2003760000	C.21
WS 10/3.5 PLUS MC SDR	2007760000	C.21
WS 10/5 M MC NE WS	1792000000	C.24
WS 10/5 M MC NE WS	1792000000	C.87
WS 10/5 M MC NE WS	1792000000	C.89
WS 10/5 M PLUS MC NE WS	2003770000	C.24
WS 10/5 M PLUS MC SDR	2007770000	C.24
WS 10/5 MC M SDR	1792010000	C.24
WS 10/5 MC NE BL	1773531693	C.23
WS 10/5 MC NE GE	1773531687	C.23
WS 10/5 MC NE RT	1773531686	C.23
WS 10/5 MC NE WS	1635000000	C.23
WS 10/5 MC SDR	1635010000	C.23
WS 10/5 PLUS MC NE WS	1046380000	C.23
WS 10/5 PLUS MC SDR	1046320000	C.23
WS 10/6 M MC NE WS	1818400000	C.28
WS 10/6 M PLUS MC NE WS	2003780000	C.29
WS 10/6 M PLUS MC SDR	2007780000	C.29
WS 10/6 MC M NE BL	1069080000	C.28
WS 10/6 MC M NE GE	1917430000	C.28
WS 10/6 MC M NE GN	1917420000	C.28
WS 10/6 MC M NE RT	1917440000	C.28
WS 10/6 MC M NE VI	1069090000	C.28
WS 10/6 MC M SDR	1818410000	C.28
WS 10/6 MC NE WS	1828450000	C.27
WS 10/6 MC SDR	1828460000	C.27
WS 10/6 PLUS MC NE WS	1046390000	C.28
WS 10/6 PLUS MC SDR	1046330000	C.28
WS 10/8 PLUS MC NE WS	1905950000	C.31
WS 10/8 PLUS MC SDR	1906030000	C.31
WS 12/3.5 MC NE WS	1778270000	C.21
WS 12/3.5 MC SDR	1778280000	C.21
WS 12/3.5 MM WS	2007180000	C.95
WS 12/5 MC NE BL	1773541693	C.25
WS 12/5 MC NE GE	1773541687	C.25
WS 12/5 MC NE OR	1773541690	C.25
WS 12/5 MC NE RT	1773541686	C.25
WS 12/5 MC NE WS	1609860000	C.25
WS 12/5 MC NE WS	1609860000	C.86
WS 12/5 MC NE WS	1609860000	C.87
WS 12/5 MC SDR	1609870000	C.25
WS 12/5 MM WS	2007190000	C.95
WS 12/5 PLUS MC NE WS	1927510000	C.25
WS 12/5 PLUS MC SDR	1927520000	C.25
WS 12/6 MC NE BL	1773551693	C.29
WS 12/6 MC NE BR	1773551692	C.29
WS 12/6 MC NE GE	1773551687	C.29
WS 12/6 MC NE OR	1773551690	C.29
WS 12/6 MC NE RT	1773551686	C.29
WS 12/6 MC NE VI	1773551689	C.29
WS 12/6 MC NE WS	1609900000	C.29
WS 12/6 MC SDR	1609910000	C.29
WS 12/6 MM WS	2007200000	C.95
WS 12/6 PLUS MC NE WS	1927530000	C.30
WS 12/6 PLUS MC SDR	1927540000	C.30
WS 12/6.5 MC NE BL	1773561693	C.30
WS 12/6.5 MC NE GE	1773561687	C.30
WS 12/6.5 MC NE RT	1773561686	C.30
WS 12/6.5 MC NE WS	1609920000	C.30
WS 12/6.5 MC SDR	1609930000	C.30
WS 12/8 MM WS	2007210000	C.95
WS 12/8 PLUS MC NE WS	1906000000	C.31
WS 12/8 PLUS MC SDR	1906010000	C.31
WS 14/5 MC NE WS	1768090000	C.26
WS 14/5 MC SDR	1852980000	C.26
WS 15/5 MC NE GE	1773571687	C.26
WS 15/5 MC NE WS	1609880000	C.26
WS 15/5 MC SDR	1609890000	C.26
WS 7.8/9.2 PLUS MC NE GR	1208970000	C.32
WS 7.8/9.2 PLUS MC SDR	1270640000	C.32
WS 8/3.5 MM WS	2007140000	C.95
WS 8/5 MC NE BL	1773521693	C.22
WS 8/5 MC NE GE	1773521687	C.22
WS 8/5 MC NE OR	1773521690	C.22
WS 8/5 MC NE RT	1773521686	C.22
WS 8/5 MC NE WS	1640740000	C.22
WS 8/5 MC NE WS	1640740000	E.46
WS 8/5 MC SDR	1640750000	C.22
WS 8/5 MM WS	2007150000	C.95
WS 8/5 PLUS MC NE WS	1951870000	C.22
WS 8/5 PLUS MC SDR	1038790000	C.22
WS 8/6 MM WS	2007160000	C.95
WS 8/6 PLUS MC NE WS	1951880000	C.27
WS 8/6 PLUS MC SDR	1038820000	C.27
WS 8/8 MM WS	2007170000	C.95
WS-A 12/8 MM WS	2448920000	C.95
WS-A 8/8 MM WS	2448930000	C.95
WSK 12 , LEER	0335900000	D.93
WSK12 m. CLI C 1-3 GE/SW Bez. 0-9	0336000000	D.93
WSM 10 -	1712501740	D.95
WSM 10 (	1712501744	D.95
WSM 10 .	1712501743	D.95
WSM 10 /	1712501739	D.95
WSM 10 :	1712501741	D.95
WSM 10 ~	1712501056	D.95
WSM 10 +	1712501738	D.95
WSM 10 =	1712501742	D.95
WSM 10 0	1712501000	D.95
WSM 10 1	1712500001	D.95
WSM 10 2	1712500002	D.95
WSM 10 3	1712500003	D.95
WSM 10 4	1712500004	D.95
WSM 10 5	1712500005	D.95
WSM 10 6	1712500006	D.95
WSM 10 7	1712500007	D.95
WSM 10 8	1712500008	D.95
WSM 10 9	1712500009	D.95
WSM 10 A	1712501637	D.95
WSM 10 Ä	1712501054	D.95
WSM 10 Å	1712501700	D.95
WSM 10 Æ	1712501672	D.95
WSM 10 B	1712501639	D.95
WSM 10 C	1712501641	D.95
WSM 10 D	1712501643	D.95
WSM 10 E	1712501645	D.95
WSM 10 ERDE	1712501053	D.95
WSM 10 F	1712501647	D.95
WSM 10 G	1712501649	D.95
WSM 10 H	1712501651	D.95
WSM 10 I	1712501653	D.95
WSM 10 J	1712501655	D.95
WSM 10 K	1712501657	D.95
WSM 10 L	1712501659	D.95
WSM 10 M	1712501661	D.95
WSM 10 N	1712501663	D.95
WSM 10 O	1712501665	D.95
WSM 10 Ö	1712501055	D.95
WSM 10 Ø	1712501670	D.95
WSM 10 P	1712501667	D.95
WSM 10 Q	1712501669	D.95
WSM 10 R	1712501671	D.95
WSM 10 S	1712501673	D.95
WSM 10 T	1712501676	D.95
WSM 10 U	1712501679	D.95
WSM 10 Ü	1712501699	D.95
WSM 10 V	1712501681	D.95
WSM 10 W	1712501683	D.95
WSM 10 X	1712501687	D.95
WSM 10 Y	1712501696	D.95
WSM 10 Z	1712501698	D.95
WSM SERVICE BOX KOMP.	1924930000	D.95
WSM TOOL AUTOMATIK	1774470000	D.98
WSM TOOL AUTOMATIK	1774470000	D.99
WSM TOOL MANUELL	1774480000	D.98
WSM TOOL MANUELL	1774480000	D.99
WSMC 11-15	1891670000	D.96
WSMC 1-5	1912170000	D.96
WSMC 16-20	1912140000	D.96
WSMC 21-25	1912150000	D.96
WSMC 26-30	1912160000	D.96
WSMC 6-10	1891680000	D.96
WSMH 108mm	1774530000	D.96
WSMH 176mm	1002680000	D.96
WSMH 288mm	1774490000	D.96
WSMH 48mm	1774500000	D.96
WSMH 60mm	1774510000	D.96
WSMH 84mm	1774520000	D.96

Z

ZGB 15	1636530000	C.86
ZGB 30	1611930000	C.86
ZS 10/5 MC NE WS	1610000000	C.37
ZS 10/5 MC SDR	1610010000	C.37
ZS 12/6 MC NE WS	1610020000	C.38
ZS 12/6 MC SDR	1610030000	C.38
ZS 15/5 MC NE WS	1646630000	C.37
ZS 15/5 MC SDR	1646640000	C.37

Order No.	Type	Page

0130000000

0133360001	DEK 6 FSZ 1-10	C.11
0133360011	DEK 6 FSZ 11-20	C.11
0133360021	DEK 6 FSZ 21-30	C.11
0133360031	DEK 6 FSZ 31-40	C.11
0133360041	DEK 6 FSZ 41-50	C.11
0138900000	SCHS1	E.45
0139000000	ESO/SCHS1 500X12,5X0,3	E.45
0139200000	STR F.SCHS	E.45

0170000000

0171111687	CLI C 1-3 GE NE MP	D.47
0171301687	CLI C 2-4 GE NE CD	D.48

0180000000

0189400000	CLI MH 110 HSTR	D.92

0210000000

0213811687	CLI C 02-3 GE NE MP	D.47

0230000000

0235860000	DEK 5 FWZ 1,3,5-19	C.11
0235960000	DEK 5 FWZ 21,23,25-39	C.11
0236060000	DEK 5 FWZ 41,43,45-59	C.11
0236160000	DEK 5 FWZ 2,4,6-20	C.11
0236260000	DEK 5 FWZ 22,24,26-40	C.11
0236360000	DEK 5 FWZ 42,44,46-60	C.11

0250000000

0251310001	CLI C 2-4 WS/SW 1 MP	D.66
0251310002	CLI C 2-4 WS/SW 2 MP	D.66
0251310003	CLI C 2-4 WS/SW 3 MP	D.66
0251310004	CLI C 2-4 WS/SW 4 MP	D.66
0251310005	CLI C 2-4 WS/SW 5 MP	D.66
0251310006	CLI C 2-4 WS/SW 6 MP	D.66
0251310007	CLI C 2-4 WS/SW 7 MP	D.66
0251310008	CLI C 2-4 WS/SW 8 MP	D.66
0251310009	CLI C 2-4 WS/SW 9 MP	D.65
0251310009	CLI C 2-4 WS/SW 9 MP	D.66
0251311000	CLI C 2-4 WS/SW 0 MP	D.66
0251311048	CLI C 2-4 WS/SW + MP	D.67
0251311049	CLI C 2-4 WS/SW - MP	D.67
0251311502	CLI C 2-4 GE/SW 0 MP	D.66
0251311503	CLI C 2-4 SW/WS 0 MP	D.65
0251311505	CLI C 2-4 GE/SW 1 MP	D.66
0251311506	CLI C 2-4 BR/WS 1 MP	D.65
0251311508	CLI C 2-4 GE/SW 2 MP	D.66
0251311509	CLI C 2-4 RT/SW 2 MP	D.65
0251311511	CLI C 2-4 GE/SW 3 MP	D.66
0251311512	CLI C 2-4 OR/SW 3 MP	D.65
0251311514	CLI C 2-4 GE/SW 4 MP	D.65
0251311514	CLI C 2-4 GE/SW 4 MP	D.66
0251311517	CLI C 2-4 GE/SW 5 MP	D.66
0251311518	CLI C 2-4 GN/SW 5 MP	D.65
0251311520	CLI C 2-4 GE/SW 6 MP	D.66
0251311521	CLI C 2-4 BL/SW 6 MP	D.65
0251311523	CLI C 2-4 GE/SW 7 MP	D.66
0251311524	CLI C 2-4 VI/SW 7 MP	D.65
0251311526	CLI C 2-4 GE/SW 8 MP	D.66
0251311527	CLI C 2-4 GR/SW 8 MP	D.65
0251311529	CLI C 2-4 GE/SW 9 MP	D.66
0251311637	CLI C 2-4 GE/SW A MP	D.66
0251311639	CLI C 2-4 GE/SW B MP	D.66
0251311641	CLI C 2-4 GE/SW C MP	D.66
0251311643	CLI C 2-4 GE/SW D MP	D.66
0251311645	CLI C 2-4 GE/SW E MP	D.66
0251311647	CLI C 2-4 GE/SW F MP	D.66
0251311649	CLI C 2-4 GE/SW G MP	D.66
0251311651	CLI C 2-4 GE/SW H MP	D.66
0251311653	CLI C 2-4 GE/SW I MP	D.66
0251311655	CLI C 2-4 GE/SW J MP	D.66
0251311657	CLI C 2-4 GE/SW K MP	D.66
0251311659	CLI C 2-4 GE/SW L MP	D.66
0251311661	CLI C 2-4 GE/SW M MP	D.66
0251311663	CLI C 2-4 GE/SW N MP	D.66
0251311665	CLI C 2-4 GE/SW O MP	D.66
0251311667	CLI C 2-4 GE/SW P MP	D.66
0251311669	CLI C 2-4 GE/SW Q MP	D.66
0251311671	CLI C 2-4 GE/SW R MP	D.66
0251311673	CLI C 2-4 GE/SW S MP	D.66
0251311676	CLI C 2-4 GE/SW T MP	D.66
0251311679	CLI C 2-4 GE/SW U MP	D.66
0251311681	CLI C 2-4 GE/SW V MP	D.66
0251311683	CLI C 2-4 GE/SW W MP	D.66
0251311687	CLI C 2-4 GE/SW X MP	D.66
0251311695	CLI C 2-4 GE/SW Ö MP	D.67
0251311696	CLI C 2-4 GE/SW Y MP	D.66
0251311697	CLI C 2-4 GE/SW Ä MP	D.67
0251311698	CLI C 2-4 GE/SW Z MP	D.66
0251311699	CLI C 2-4 GE/SW Å MP	D.67
0251311735	CLI C 2-4 GE/SW Æ MP	D.67
0251311736	CLI C 2-4 GE/SW Ø MP	D.67
0251311738	CLI C 2-4 GE/SW + MP	D.67
0251311740	CLI C 2-4 GE/SW - MP	D.67
0251311742	CLI C 2-4 GE/SW / MP	D.67
0251311746	CLI C 2-4 GE/SW ET MP	D.67
0251311747	CLI C 2-4 GE/SW PET. MP	D.67
0251311748	CLI C 2-4 GE/SW . MP	D.67
0251311750	CLI C 2-4 GE/SW : MP	D.67
0251311751	CLI C 2-4 GE/SW = MP	D.67
0251311752	CLI C 2-4 GE/SW AC MP	D.67
0252111503	CLI C 02-3 SW/WS 0 MP	D.51
0252111506	CLI C 02-3 BR/WS 1 MP	D.51
0252111509	CLI C 02-3 RT/SW 2 MP	D.51
0252111512	CLI C 02-3 OR/SW 3 MP	D.51
0252111514	CLI C 02-3 GE/SW 4 MP	D.51
0252111518	CLI C 02-3 GN/SW 5 MP	D.51
0252111521	CLI C 02-3 BL/SW 6 MP	D.51
0252111524	CLI C 02-3 VI/SW 7 MP	D.51
0252111527	CLI C 02-3 GR/SW 8 MP	D.51
0252111530	CLI C 02-3 WS/SW 9 MP	D.51
0252111637	CLI C 02-3 GE/SW A MP	D.52
0252111639	CLI C 02-3 GE/SW B MP	D.52
0252111641	CLI C 02-3 GE/SW C MP	D.52
0252111643	CLI C 02-3 GE/SW D MP	D.52
0252111645	CLI C 02-3 GE/SW E MP	D.52
0252111647	CLI C 02-3 GE/SW F MP	D.52
0252111649	CLI C 02-3 GE/SW G MP	D.52
0252111651	CLI C 02-3 GE/SW H MP	D.52
0252111653	CLI C 02-3 GE/SW I MP	D.52
0252111655	CLI C 02-3 GE/SW J MP	D.52
0252111657	CLI C 02-3 GE/SW K MP	D.52
0252111659	CLI C 02-3 GE/SW L MP	D.52
0252111661	CLI C 02-3 GE/SW M MP	D.52
0252111663	CLI C 02-3 GE/SW N MP	D.52
0252111665	CLI C 02-3 GE/SW O MP	D.52
0252111667	CLI C 02-3 GE/SW P MP	D.52
0252111669	CLI C 02-3 GE/SW Q MP	D.52
0252111671	CLI C 02-3 GE/SW R MP	D.52
0252111673	CLI C 02-3 GE/SW S MP	D.52
0252111676	CLI C 02-3 GE/SW T MP	D.52
0252111679	CLI C 02-3 GE/SW U MP	D.52
0252111681	CLI C 02-3 GE/SW V MP	D.52
0252111683	CLI C 02-3 GE/SW W MP	D.52
0252111687	CLI C 02-3 GE/SW X MP	D.52
0252111695	CLI C 02-3 GE/SW Ö MP	D.52
0252111696	CLI C 02-3 GE/SW Y MP	D.52
0252111697	CLI C 02-3 GE/SW Ä MP	D.52
0252111698	CLI C 02-3 GE/SW Z MP	D.52
0252111699	CLI C 02-3 GE/SW Å MP	D.52
0252111726	CLI C 02-6 GE/SW A1 MP	D.55
0252111727	CLI C 02-6 GE/SW A2 MP	D.55
0252111728	CLI C 02-6 GE/SW L1 MP	D.55
0252111729	CLI C 02-6 GE/SW L2 MP	D.55
0252111730	CLI C 02-6 GE/SW L3 MP	D.55
0252111734	CLI C 02-9 GE/SW PEN MP	D.55
0252111737	CLI C 02-3 RT/SW + MP	D.52
0252111738	CLI C 02-3 GE/SW + MP	D.52
0252111740	CLI C 02-3 GE/SW - MP	D.52
0252111741	CLI C 02-3 BL/SW - MP	D.52
0252111742	CLI C 02-3 GE/SW / MP	D.52
0252111746	CLI C 02-3 GE/SW ET MP	D.52
0252111748	CLI C 02-3 GE/SW . MP	D.52
0252111750	CLI C 02-3 GE/SW : MP	D.52
0252111751	CLI C 02-3 GE/SW = MP	D.52
0252111752	CLI C 02-3 GE/SW AC MP	D.52
0252509999	CLI C 02-15 SDR SG	D.49
0252611502	CLI C 1-3 GE/SW 0 MP	D.56
0252611503	CLI C 1-3 SW/WS 0 MP	D.56
0252611505	CLI C 1-3 GE/SW 1 MP	D.56
0252611506	CLI C 1-3 BR/WS 1 MP	D.56
0252611508	CLI C 1-3 GE/SW 2 MP	D.56
0252611509	CLI C 1-3 RT/SW 2 MP	D.56
0252611511	CLI C 1-3 GE/SW 3 MP	D.56
0252611512	CLI C 1-3 OR/SW 3 MP	D.56
0252611514	CLI C 1-3 GE/SW 4 MP	D.56
0252611514	CLI C 1-3 GE/SW 4 MP	D.56
0252611517	CLI C 1-3 GE/SW 5 MP	D.56
0252611518	CLI C 1-3 GN/SW 5 MP	D.56
0252611520	CLI C 1-3 GE/SW 6 MP	D.56
0252611521	CLI C 1-3 BL/SW 6 MP	D.56
0252611523	CLI C 1-3 GE/SW 7 MP	D.56
0252611524	CLI C 1-3 VI/SW 7 MP	D.56
0252611526	CLI C 1-3 GE/SW 8 MP	D.56
0252611527	CLI C 1-3 GR/SW 8 MP	D.56
0252611529	CLI C 1-3 GE/SW 9 MP	D.56
0252611530	CLI C 1-3 WS/SW 9 MP	D.56
0252611637	CLI C 1-3 GE/SW A MP	D.57
0252611639	CLI C 1-3 GE/SW B MP	D.57
0252611641	CLI C 1-3 GE/SW C MP	D.57
0252611643	CLI C 1-3 GE/SW D MP	D.57
0252611645	CLI C 1-3 GE/SW E MP	D.57
0252611647	CLI C 1-3 GE/SW F MP	D.57
0252611649	CLI C 1-3 GE/SW G MP	D.57
0252611651	CLI C 1-3 GE/SW H MP	D.57
0252611653	CLI C 1-3 GE/SW I MP	D.57
0252611655	CLI C 1-3 GE/SW J MP	D.57
0252611657	CLI C 1-3 GE/SW K MP	D.57
0252611659	CLI C 1-3 GE/SW L MP	D.57
0252611661	CLI C 1-3 GE/SW M MP	D.57
0252611663	CLI C 1-3 GE/SW N MP	D.57
0252611664	CLI C 1-3 BL/SW N MP	D.57
0252611665	CLI C 1-3 GE/SW O MP	D.57
0252611667	CLI C 1-3 GE/SW P MP	D.57
0252611669	CLI C 1-3 GE/SW Q MP	D.57
0252611671	CLI C 1-3 GE/SW R MP	D.57
0252611673	CLI C 1-3 GE/SW S MP	D.57
0252611676	CLI C 1-3 GE/SW T MP	D.57
0252611679	CLI C 1-3 GE/SW U MP	D.57
0252611681	CLI C 1-3 GE/SW V MP	D.57
0252611683	CLI C 1-3 GE/SW W MP	D.57
0252611687	CLI C 1-3 GE/SW X MP	D.57
0252611695	CLI C 1-3 GE/SW Ö MP	D.57
0252611696	CLI C 1-3 GE/SW Y MP	D.57
0252611697	CLI C 1-3 GE/SW Ä MP	D.57
0252611698	CLI C 1-3 GE/SW Z MP	D.57
0252611699	CLI C 1-3 GE/SW Å MP	D.57
0252611737	CLI C 1-3 RT/SW + MP	D.57
0252611738	CLI C 1-3 GE/SW + MP	D.57
0252611740	CLI C 1-3 GE/SW - MP	D.57
0252611741	CLI C 1-3 BL/SW - MP	D.57
0252611742	CLI C 1-3 GE/SW / MP	D.57
0252611746	CLI C 1-3 GE/SW ET MP	D.57
0252611747	CLI C 1-3 GE/SW PET. MP	D.57
0252611748	CLI C 1-3 GE/SW . MP	D.57
0252611750	CLI C 1-3 GE/SW : MP	D.57
0252611751	CLI C 1-3 GE/SW = MP	D.57
0252611752	CLI C 1-3 GE/SW AC MP	D.57
0252709999	CLI C 1-6 SDR CD	D.49
0252711522	CLI C 1-6 GE/SW 01 MP	D.61
0252711523	CLI C 1-6 GE/SW 02 MP	D.61
0252711524	CLI C 1-6 GE/SW 03 MP	D.61
0252711525	CLI C 1-6 GE/SW 04 MP	D.61
0252711526	CLI C 1-6 GE/SW 05 MP	D.61
0252711527	CLI C 1-6 GE/SW 06 MP	D.61
0252711528	CLI C 1-6 GE/SW 07 MP	D.61
0252711529	CLI C 1-6 GE/SW 08 MP	D.61
0252711530	CLI C 1-6 GE/SW 09 MP	D.61
0252711531	CLI C 1-6 GE/SW 10 MP	D.61
0252711532	CLI C 1-6 GE/SW 11 MP	D.61
0252711533	CLI C 1-6 GE/SW 12 MP	D.61
0252711534	CLI C 1-6 GE/SW 13 MP	D.61
0252711535	CLI C 1-6 GE/SW 14 MP	D.61
0252711536	CLI C 1-6 GE/SW 15 MP	D.61
0252711537	CLI C 1-6 GE/SW 16 MP	D.61
0252711538	CLI C 1-6 GE/SW 17 MP	D.61
0252711539	CLI C 1-6 GE/SW 18 MP	D.61
0252711540	CLI C 1-6 GE/SW 19 MP	D.61
0252711541	CLI C 1-6 GE/SW 20 MP	D.61
0252711542	CLI C 1-6 GE/SW 21 MP	D.61
0252711543	CLI C 1-6 GE/SW 22 MP	D.61
0252711544	CLI C 1-6 GE/SW 23 MP	D.61
0252711545	CLI C 1-6 GE/SW 24 MP	D.61
0252711546	CLI C 1-6 GE/SW 25 MP	D.61
0252711547	CLI C 1-6 GE/SW 26 MP	D.61
0252711548	CLI C 1-6 GE/SW 27 MP	D.61
0252711549	CLI C 1-6 GE/SW 28 MP	D.61
0252711550	CLI C 1-6 GE/SW 29 MP	D.61
0252711551	CLI C 1-6 GE/SW 30 MP	D.61
0252711552	CLI C 1-6 GE/SW 31 MP	D.61
0252711553	CLI C 1-6 GE/SW 32 MP	D.61
0252711554	CLI C 1-6 GE/SW 33 MP	D.61
0252711555	CLI C 1-6 GE/SW 34 MP	D.61
0252711556	CLI C 1-6 GE/SW 35 MP	D.61
0252711557	CLI C 1-6 GE/SW 36 MP	D.61
0252711558	CLI C 1-6 GE/SW 37 MP	D.61
0252711559	CLI C 1-6 GE/SW 38 MP	D.61
0252711560	CLI C 1-6 GE/SW 39 MP	D.61
0252711561	CLI C 1-6 GE/SW 40 MP	D.61
0252711562	CLI C 1-6 GE/SW 41 MP	D.61
0252711563	CLI C 1-6 GE/SW 42 MP	D.61
0252711564	CLI C 1-6 GE/SW 43 MP	D.61
0252711565	CLI C 1-6 GE/SW 44 MP	D.61
0252711566	CLI C 1-6 GE/SW 45 MP	D.61
0252711567	CLI C 1-6 GE/SW 46 MP	D.61
0252711568	CLI C 1-6 GE/SW 47 MP	D.61
0252711569	CLI C 1-6 GE/SW 48 MP	D.61
0252711570	CLI C 1-6 GE/SW 49 MP	D.61
0252711571	CLI C 1-6 GE/SW 50 MP	D.61
0252711572	CLI C 1-6 GE/SW 51 MP	D.61
0252711573	CLI C 1-6 GE/SW 52 MP	D.61
0252711574	CLI C 1-6 GE/SW 53 MP	D.61
0252711575	CLI C 1-6 GE/SW 54 MP	D.61
0252711576	CLI C 1-6 GE/SW 55 MP	D.61
0252711577	CLI C 1-6 GE/SW 56 MP	D.61
0252711578	CLI C 1-6 GE/SW 57 MP	D.61
0252711579	CLI C 1-6 GE/SW 58 MP	D.61
0252711580	CLI C 1-6 GE/SW 59 MP	D.61
0252711581	CLI C 1-6 GE/SW 60 MP	D.61
0252711582	CLI C 1-6 GE/SW 61 MP	D.62
0252711583	CLI C 1-6 GE/SW 62 MP	D.62
0252711584	CLI C 1-6 GE/SW 63 MP	D.62
0252711585	CLI C 1-6 GE/SW 64 MP	D.62
0252711586	CLI C 1-6 GE/SW 65 MP	D.62
0252711587	CLI C 1-6 GE/SW 66 MP	D.62
0252711588	CLI C 1-6 GE/SW 67 MP	D.62
0252711589	CLI C 1-6 GE/SW 68 MP	D.62
0252711590	CLI C 1-6 GE/SW 69 MP	D.62
0252711591	CLI C 1-6 GE/SW 70 MP	D.62
0252711592	CLI C 1-6 GE/SW 71 MP	D.62
0252711593	CLI C 1-6 GE/SW 72 MP	D.62
0252711594	CLI C 1-6 GE/SW 73 MP	D.62
0252711595	CLI C 1-6 GE/SW 74 MP	D.62
0252711596	CLI C 1-6 GE/SW 75 MP	D.62
0252711597	CLI C 1-6 GE/SW 76 MP	D.62
0252711598	CLI C 1-6 GE/SW 77 MP	D.62
0252711599	CLI C 1-6 GE/SW 78 MP	D.62
0252711600	CLI C 1-6 GE/SW 79 MP	D.62
0252711601	CLI C 1-6 GE/SW 80 MP	D.62
0252711602	CLI C 1-6 GE/SW 81 MP	D.62
0252711603	CLI C 1-6 GE/SW 82 MP	D.62
0252711604	CLI C 1-6 GE/SW 83 MP	D.62
0252711605	CLI C 1-6 GE/SW 84 MP	D.62
0252711606	CLI C 1-6 GE/SW 85 MP	D.62
0252711607	CLI C 1-6 GE/SW 86 MP	D.62
0252711608	CLI C 1-6 GE/SW 87 MP	D.62
0252711609	CLI C 1-6 GE/SW 88 MP	D.62
0252711610	CLI C 1-6 GE/SW 89 MP	D.62
0252711611	CLI C 1-6 GE/SW 90 MP	D.62
0252711612	CLI C 1-6 GE/SW 91 MP	D.62
0252711613	CLI C 1-6 GE/SW 92 MP	D.62
0252711614	CLI C 1-6 GE/SW 93 MP	D.62
0252711615	CLI C 1-6 GE/SW 94 MP	D.62
0252711616	CLI C 1-6 GE/SW 95 MP	D.62
0252711617	CLI C 1-6 GE/SW 96 MP	D.62
0252711618	CLI C 1-6 GE/SW 97 MP	D.62
0252711619	CLI C 1-6 GE/SW 98 MP	D.62
0252711620	CLI C 1-6 GE/SW 99 MP	D.62
0252711726	CLI C 1-6 GE/SW A1 MP	D.62
0252711727	CLI C 1-6 GE/SW A2 MP	D.62
0252711728	CLI C 1-6 GE/SW L1 MP	D.62
0252711729	CLI C 1-6 GE/SW L2 MP	D.62
0252711730	CLI C 1-6 GE/SW L3 MP	D.62
0252711733	CLI C 1-6 GE/SW PE MP	D.62
0252711734	CLI C 1-9 GE/SW PEN MP	D.63
0252809999	CLI C 1-9 SDR CD	D.49
0253411502	CLI C 3-6 GE/SW 0 MP	D.70
0253411505	CLI C 3-6 GE/SW 1 MP	D.70
0253411508	CLI C 3-6 GE/SW 2 MP	D.70
0253411511	CLI C 3-6 GE/SW 3 MP	D.70
0253411514	CLI C 3-6 GE/SW 4 MP	D.70
0253411517	CLI C 3-6 GE/SW 5 MP	D.70
0253411520	CLI C 3-6 GE/SW 6 MP	D.70
0253411523	CLI C 3-6 GE/SW 7 MP	D.70
0253411526	CLI C 3-6 GE/SW 8 MP	D.70
0253411529	CLI C 3-6 GE/SW 9 MP	D.70
0253411637	CLI C 3-6 GE/SW A MP	D.70
0253411639	CLI C 3-6 GE/SW B MP	D.70
0253411641	CLI C 3-6 GE/SW C MP	D.70
0253411643	CLI C 3-6 GE/SW D MP	D.70
0253411645	CLI C 3-6 GE/SW E MP	D.70
0253411647	CLI C 3-6 GE/SW F MP	D.70
0253411649	CLI C 3-6 GE/SW G MP	D.70
0253411651	CLI C 3-6 GE/SW H MP	D.70
0253411653	CLI C 3-6 GE/SW I MP	D.70
0253411655	CLI C 3-6 GE/SW J MP	D.70
0253411657	CLI C 3-6 GE/SW K MP	D.70
0253411659	CLI C 3-6 GE/SW L MP	D.70
0253411661	CLI C 3-6 GE/SW M MP	D.70
0253411663	CLI C 3-6 GE/SW N MP	D.70
0253411665	CLI C 3-6 GE/SW O MP	D.70
0253411667	CLI C 3-6 GE/SW P MP	D.70
0253411669	CLI C 3-6 GE/SW Q MP	D.70
0253411671	CLI C 3-6 GE/SW R MP	D.70
0253411673	CLI C 3-6 GE/SW S MP	D.70
0253411676	CLI C 3-6 GE/SW T MP	D.70
0253411679	CLI C 3-6 GE/SW U MP	D.70
0253411681	CLI C 3-6 GE/SW V MP	D.70
0253411683	CLI C 3-6 GE/SW W MP	D.70
0253411687	CLI C 3-6 GE/SW X MP	D.70
0253411695	CLI C 3-6 GE/SW Ö MP	D.71
0253411696	CLI C 3-6 GE/SW Y MP	D.70
0253411697	CLI C 3-6 GE/SW Ä MP	D.71
0253411698	CLI C 3-6 GE/SW Z MP	D.70
0253411699	CLI C 3-6 GE/SW Å MP	D.71
0253411738	CLI C 3-6 GE/SW + MP	D.71
0253411740	CLI C 3-6 GE/SW - MP	D.71
0253411741	CLI C 3-6 BL/SW - MP	D.71
0253411742	CLI C 3-6 GE/SW / MP	D.71
0253411746	CLI C 3-6 GE/SW ET MP	D.71
0253411748	CLI C 3-6 GE/SW . MP	D.71
0253411750	CLI C 3-6 GE/SW : MP	D.71
0253411751	CLI C 3-6 GE/SW = MP	D.71
0253411752	CLI C 3-6 GE/SW AC MP	D.71
0253511726	CLI C 3-9 GE/SW A1 MP	D.71
0253511727	CLI C 3-9 GE/SW A2 MP	D.71
0253511728	CLI C 3-9 GE/SW L1 MP	D.71
0253511729	CLI C 3-9 GE/SW L2 MP	D.71
0253511730	CLI C 3-9 GE/SW L3 MP	D.71
0253511733	CLI C 3-9 GE/SW PE MP	D.71
0253511735	CLI C 3-9 GE/SW SL MP	D.71
0253511750	CLI C 3-9 GE/SW X1 MP	D.71
0253511751	CLI C 3-9 GE/SW X2 MP	D.71
0253511752	CLI C 3-9 GE/SW X3 MP	D.71

0290000000

0292460000	SCHT 5	C.88
0292460000	SCHT 5	C.92
0292460000	SCHT 5	D.19

Order No.	Type	Page
0294000000	STR 5 F.SCHT 5	C.88

0330000000

0335900000	WSK 12 , LEER	D.93
0336000000	WSK12 m. CLI C 1-3 GE/SW Bez. 0-9	D.93
0337400000	SCHS2	E.16
0337400000	SCHS2	E.46

0350000000

0354361187	DEK 5 FWZ L1-PE	C.11
0354361203	DEK 5 FWZ L1-EIK	C.11

0400000000

0407360001	DEK 6,5 FSZ 1-10	C.11
0407360011	DEK 6,5 FSZ 11-20	C.11

0460000000

0460660001	DEK 5 FSZ 1-10	C.11
0460660011	DEK 5 FSZ 11-20	C.11
0460660021	DEK 5 FSZ 21-30	C.11
0460660031	DEK 5 FSZ 31-40	C.11
0460660041	DEK 5 FSZ 41-50	C.11
0460660051	DEK 5 FSZ 51-60	C.11
0460660061	DEK 5 FSZ 61-70	C.11
0460660071	DEK 5 FSZ 71-80	C.11
0460660081	DEK 5 FSZ 81-90	C.11
0460660091	DEK 5 FSZ 91-100	C.11
0468160001	DEK 6,5 FW 1-50	C.11
0468160051	DEK 6,5 FW 51-100	C.11
0468160101	DEK 6,5 FW 101-150	C.11
0468260001	DEK 6,5 FS 1-50	C.11
0468260051	DEK 6,5 FS 51-100	C.11
0468260101	DEK 6,5 FS 101-150	C.11
0468660001	DEK 6 FW 1-50	C.11
0468660051	DEK 6 FW 51-100	C.11
0468660101	DEK 6 FW 101-150	C.11
0468660151	DEK 6 FW 151-200	C.11
0468660201	DEK 6 FW 201-250	C.11
0468660251	DEK 6 FW 251-300	C.11
0468660301	DEK 6 FW 301-350	C.11
0468660351	DEK 6 FW 351-400	C.11
0468660451	DEK 6 FW 451-500	C.11
0468660501	DEK 6 FW 501-550	C.11
0468660551	DEK 6 FW 551-600	C.11
0468660601	DEK 6 FW 601-650	C.11
0468660651	DEK 6 FW 651-700	C.11
0468660701	DEK 6 FW 701-750	C.11
0468660751	DEK 6 FW 751-800	C.11
0468660801	DEK 6 FW 801-850	C.11
0468660851	DEK 6 FW 851-900	C.11
0468660901	DEK 6 FW 901-950	C.11
0468660951	DEK 6 FW 951-999	C.11
0468760001	DEK 6 FS 1-50	C.11
0468760051	DEK 6 FS 51-100	C.11
0468760101	DEK 6 FS 101-150	C.11

0470000000

0473460001	DEK 5 FW 1-50	C.11
0473460051	DEK 5 FW 51-100	C.11
0473460101	DEK 5 FW 101-150	C.11
0473460151	DEK 5 FW 151-200	C.11
0473460201	DEK 5 FW 201-250	C.11
0473460251	DEK 5 FW 251-300	C.11
0473460301	DEK 5 FW 301-350	C.11
0473460351	DEK 5 FW 351-400	C.11
0473460401	DEK 5 FW 401-450	C.11
0473460451	DEK 5 FW 451-500	C.11
0473460501	DEK 5 FW 501-550	C.11
0473460551	DEK 5 FW 551-600	C.11
0473460601	DEK 5 FW 601-650	C.11
0473460651	DEK 5 FW 651-700	C.11
0473460701	DEK 5 FW 701-750	C.11
0473460751	DEK 5 FW 751-800	C.11
0473460801	DEK 5 FW 801-850	C.11
0473460851	DEK 5 FW 851-900	C.11
0473460901	DEK 5 FW 901-950	C.11
0473560001	DEK 5 FS 1-50	C.11
0473560051	DEK 5 FS 51-100	C.11
0473560101	DEK 5 FS 101-150	C.11
0473560151	DEK 5 FS 151-200	C.11
0473560201	DEK 5 FS 201-250	C.11

0500000000

0508401694	STI Waterproof schwarz	F.11
0508401694	STI Waterproof schwarz	F.13

0510000000

0515300000	STR 7 F.SCHT 7	C.86
0515300000	STR 7 F.SCHT 7	C.89
0517960000	SCHT 7	C.89
0518960001	DEK 6 FWZ 1-10	C.11
0518960011	DEK 6 FWZ 11-20	C.11
0518960021	DEK 6 FWZ 21-30	C.11
0518960031	DEK 6 FWZ 31-40	C.11
0518960041	DEK 6 FWZ 41-50	C.11
0518960051	DEK 6 FWZ 51-60	C.11
0518960061	DEK 6 FWZ 61-70	C.11
0518960071	DEK 6 FWZ 71-80	C.11
0518960081	DEK 6 FWZ 81-90	C.11
0518960091	DEK 6 FWZ 91-100	C.11
0518960101	DEK 6 FWZ 101-110	C.11
0519060001	DEK 6,5 FWZ 1-10	C.11
0519060011	DEK 6,5 FWZ 11-20	C.11
0519060021	DEK 6,5 FWZ 21-30	C.11

0520000000

0522361075	DEK 5 GW L1	C.11
0522361076	DEK 5 GW L2	C.11
0522361077	DEK 5 GW L3	C.11
0522660001	DEK 5 GW 1	C.11
0522660002	DEK 5 GW 2	C.11
0522660003	DEK 5 GW 3	C.11
0522660004	DEK 5 GW 4	C.11
0522660005	DEK 5 GW 5	C.11
0522660006	DEK 5 GW 6	C.11
0522660007	DEK 5 GW 7	C.11
0522660008	DEK 5 GW 8	C.11
0522660009	DEK 5 GW 9	C.11
0522660010	DEK 5 GW 10	C.11
0522660011	DEK 5 GW 11	C.11
0522660012	DEK 5 GW 12	C.11
0522660013	DEK 5 GW 13	C.11
0522660014	DEK 5 GW 14	C.11
0522660015	DEK 5 GW 15	C.11
0522660016	DEK 5 GW 16	C.11
0522660017	DEK 5 GW 17	C.11
0522660018	DEK 5 GW 18	C.11
0522660019	DEK 5 GW 19	C.11
0522660020	DEK 5 GW 20	C.11
0522660021	DEK 5 GW 21	C.11
0522761021	DEK 5 GW A	C.11
0522761022	DEK 5 GW B	C.11
0522761026	DEK 5 GW F	C.11
0522761032	DEK 5 GW L	C.11
0522761034	DEK 5 GW N	C.11
0522761035	DEK 5 GW O	C.11
0522761038	DEK 5 GW R	C.11
0522761039	DEK 5 GW S	C.11
0522761040	DEK 5 GW T	C.11
0522761041	DEK 5 GW U	C.11
0522761042	DEK 5 GW V	C.11
0522761043	DEK 5 GW W	C.11
0522761044	DEK 5 GW X	C.11
0523060001	DEK 5 FWZ 1-10	C.11
0523060011	DEK 5 FWZ 11-20	C.11
0523060021	DEK 5 FWZ 21-30	C.11
0523060031	DEK 5 FWZ 31-40	C.11
0523060041	DEK 5 FWZ 41-50	C.11
0523060051	DEK 5 FWZ 51-60	C.11
0523060061	DEK 5 FWZ 61-70	C.11
0523060071	DEK 5 FWZ 71-80	C.11
0523060081	DEK 5 FWZ 81-90	C.11
0523060091	DEK 5 FWZ 91-100	C.11
0524400000	CLI MH 70 HSTR	D.92
0526960001	DEK 6 GW 1	C.11
0526960002	DEK 6 GW 2	C.11
0526960003	DEK 6 GW 3	C.11
0526960004	DEK 6 GW 4	C.11
0526960005	DEK 6 GW 5	C.11
0526960006	DEK 6 GW 6	C.11
0526960008	DEK 6 GW 8	C.11
0526960010	DEK 6 GW 10	C.11

0530000000

0532100000	CLI R 1 F. CLI C 1-3	D.92
0537261187	DEK 5 GW PE	C.11

0550000000

0558360000	DEK 5 FWZ U,V,W,N,PE	C.11
0559200000	CLI RS 3 MDCLI C 02	D.92
0559300000	CLI RS 4 MDCLI C1+02	D.92
0559900000	CLI R 02 F. CLI C 02-3	D.92

0560000000

0560001501	CLI R 02-3 GE/SW 0	D.73
0560001503	CLI R 02-3 SW/WS 0	D.73
0560001504	CLI R 02-3 GE/SW 1	D.73
0560001506	CLI R 02-3 BR/WS 1	D.73
0560001507	CLI R 02-3 GE/SW 2	D.73
0560001509	CLI R 02-3 RT/SW 2	D.73
0560001510	CLI R 02-3 GE/SW 3	D.73
0560001512	CLI R 02-3 OR/SW 3	D.73
0560001513	CLI R 02-3 GE/SW 4	D.73
0560001513	CLI R 02-3 GE/SW 4	D.73
0560001516	CLI R 02-3 GE/SW 5	D.73
0560001518	CLI R 02-3 GN/SW 5	D.73
0560001519	CLI R 02-3 GE/SW 6	D.73
0560001521	CLI R 02-3 BL/SW 6	D.73
0560001522	CLI R 02-3 GE/SW 7	D.73
0560001524	CLI R 02-3 VI/SW 7	D.73
0560001525	CLI R 02-3 GE/SW 8	D.73
0560001527	CLI R 02-3 GR/SW 8	D.73
0560001528	CLI R 02-3 GE/SW 9	D.73
0560001530	CLI R 02-3 WS/SW 9	D.73
0560001638	CLI R 02-3 GE/SW A	D.74
0560001640	CLI R 02-3 GE/SW B	D.74
0560001642	CLI R 02-3 GE/SW C	D.74
0560001644	CLI R 02-3 GE/SW D	D.74
0560001646	CLI R 02-3 GE/SW E	D.74
0560001648	CLI R 02-3 GE/SW F	D.74
0560001650	CLI R 02-3 GE/SW G	D.74
0560001652	CLI R 02-3 GE/SW H	D.74
0560001654	CLI R 02-3 GE/SW I	D.74
0560001656	CLI R 02-3 GE/SW J	D.74
0560001658	CLI R 02-3 GE/SW K	D.74
0560001660	CLI R 02-3 GE/SW L	D.74
0560001662	CLI R 02-3 GE/SW M	D.74
0560001664	CLI R 02-3 GE/SW N	D.74
0560001666	CLI R 02-3 GE/SW O	D.74
0560001668	CLI R 02-3 GE/SW P	D.74
0560001670	CLI R 02-3 GE/SW Q	D.74
0560001672	CLI R 02-3 GE/SW R	D.74
0560001675	CLI R 02-3 GE/SW S	D.74
0560001678	CLI R 02-3 GE/SW T	D.74
0560001680	CLI R 02-3 GE/SW U	D.74
0560001682	CLI R 02-3 GE/SW V	D.74
0560001684	CLI R 02-3 GE/SW W	D.74
0560001687	CLI R 02-3 GE NE	D.72
0560001693	CLI R 02-3 GE/SW X	D.74
0560001695	CLI R 02-3 GE/SW Ö	D.74
0560001697	CLI R 02-3 GE/SW Y	D.74
0560001698	CLI R 02-3 GE/SW Å	D.74
0560001699	CLI R 02-3 GE/SW Z	D.74
0560001738	CLI R 02-3 GE/SW +	D.74
0560001739	CLI R 02-3 RT/SW +	D.75
0560001740	CLI R 02-3 GE/SW -	D.74
0560001741	CLI R 02-3 BL/SW -	D.75
0560001743	CLI R 02-3 GE/SW /	D.74
0560001749	CLI R 02-3 GE/SW .	D.74
0560009999	CLI R 02-3 SDR	D.72
0563600000	CLI RH 20-10 CLI R 10	D.92
0563700000	CLI RH 20-02 CLI R 02	D.92

0570000000

0572900002	CLI R 1-3 BL NE	D.72
0572901502	CLI R 1-3 SW/WS 0	D.75
0572901503	CLI R 1-3 GE/SW 0	D.75
0572901505	CLI R 1-3 BR/WS 1	D.75
0572901506	CLI R 1-3 GE/SW 1	D.75
0572901508	CLI R 1-3 RT/SW 2	D.75
0572901509	CLI R 1-3 GE/SW 2	D.75
0572901511	CLI R 1-3 OR/SW 3	D.75
0572901512	CLI R 1-3 GE/SW 3	D.75
0572901515	CLI R 1-3 GE/SW 4	D.75
0572901515	CLI R 1-3 GE/SW 4	D.75
0572901517	CLI R 1-3 GN/SW 5	D.75
0572901518	CLI R 1-3 GE/SW 5	D.75
0572901520	CLI R 1-3 BL/SW 6	D.75
0572901521	CLI R 1-3 GE/SW 6	D.75
0572901523	CLI R 1-3 VI/SW 7	D.75
0572901524	CLI R 1-3 GE/SW 7	D.75
0572901526	CLI R 1-3 GR/SW 8	D.75
0572901527	CLI R 1-3 GE/SW 8	D.75
0572901529	CLI R 1-3 WS/SW 9	D.75
0572901530	CLI R 1-3 GE/SW 9	D.75
0572901638	CLI R 1-3 GE/SW A	D.76
0572901640	CLI R 1-3 GE/SW B	D.76
0572901642	CLI R 1-3 GE/SW C	D.76
0572901644	CLI R 1-3 GE/SW D	D.76
0572901646	CLI R 1-3 GE/SW E	D.76
0572901648	CLI R 1-3 GE/SW F	D.76
0572901650	CLI R 1-3 GE/SW G	D.76
0572901652	CLI R 1-3 GE/SW H	D.76
0572901654	CLI R 1-3 GE/SW I	D.76
0572901656	CLI R 1-3 GE/SW J	D.76
0572901658	CLI R 1-3 GE/SW K	D.76
0572901660	CLI R 1-3 GE/SW L	D.76
0572901662	CLI R 1-3 GE/SW M	D.76
0572901664	CLI R 1-3 GE/SW N	D.76
0572901666	CLI R 1-3 GE/SW O	D.76
0572901668	CLI R 1-3 GE/SW P	D.76
0572901670	CLI R 1-3 GE/SW Q	D.76
0572901672	CLI R 1-3 GE/SW R	D.76
0572901675	CLI R 1-3 GE/SW S	D.76
0572901678	CLI R 1-3 GE/SW T	D.76
0572901680	CLI R 1-3 GE/SW U	D.76
0572901682	CLI R 1-3 GE/SW V	D.76
0572901684	CLI R 1-3 GE/SW W	D.76
0572901687	CLI R 1-3 GE NE	D.72
0572901693	CLI R 1-3 GE/SW X	D.76
0572901697	CLI R 1-3 GE/SW Y	D.76
0572901698	CLI R 1-3 GE/SW Å	D.76
0572901699	CLI R 1-3 GE/SW Z	D.76
0572901738	CLI R 1-3 GE/SW +	D.76
0572901739	CLI R 1-3 RT/SW +	D.76
0572901740	CLI R 1-3 GE/SW -	D.76
0572901741	CLI R 1-3 BL/SW -	D.76
0572901743	CLI R 1-3 GE/SW /	D.76
0572901745	CLI R 1-3 GE/SW ET	D.76
0572901746	CLI R 1-3 BL/SW N	D.76
0572901749	CLI R 1-3 GE/SW .	D.76
0572909999	CLI R 1-3 SDR	D.72
0576261198	DEK 5 GW +	C.11
0576261199	DEK 5 GW -	C.11
0576261202	DEK 5 GW ERDE	C.11
0576261203	DEK 5 GW ERDE I.KR.	C.11

0630000000

0631961187	DEK 6 FWZ L1-PE	C.11
0631961203	DEK 6 FWZ L1-ERDE I.KRE	C.11
0632161203	DEK 6,5 FW L1-ERDE I.KR	C.11
0632560000	DEK 6 FW L,N,PE	C.11

0640000000

0648001637	CLI O 10-3 GE/SW A MP	D.80
0648001639	CLI O 10-3 GE/SW B MP	D.80
0648001641	CLI O 10-3 GE/SW C MP	D.80
0648001643	CLI O 10-3 GE/SW D MP	D.80
0648001645	CLI O 10-3 GE/SW E MP	D.80
0648001647	CLI O 10-3 GE/SW F MP	D.80
0648001649	CLI O 10-3 GE/SW G MP	D.80
0648001651	CLI O 10-3 GE/SW H MP	D.80
0648001653	CLI O 10-3 GE/SW I MP	D.80
0648001655	CLI O 10-3 GE/SW J MP	D.80
0648001657	CLI O 10-3 GE/SW K MP	D.80
0648001659	CLI O 10-3 GE/SW L MP	D.80
0648001661	CLI O 10-3 GE/SW M MP	D.80
0648001663	CLI O 10-3 GE/SW N MP	D.80
0648001665	CLI O 10-3 GE/SW O MP	D.80
0648001667	CLI O 10-3 GE/SW P MP	D.80
0648001669	CLI O 10-3 GE/SW Q MP	D.80
0648001671	CLI O 10-3 GE/SW R MP	D.80
0648001673	CLI O 10-3 GE/SW S MP	D.80
0648001676	CLI O 10-3 GE/SW T MP	D.80
0648001679	CLI O 10-3 GE/SW U MP	D.80
0648001681	CLI O 10-3 GE/SW V MP	D.80
0648001683	CLI O 10-3 GE/SW W MP	D.80
0648001687	CLI O 10-3 GE/SW X MP	D.80
0648001695	CLI O 10-3 GE/SW Ö MP	D.80
0648001696	CLI O 10-3 GE/SW Y MP	D.80
0648001697	CLI O 10-3 GE/SW Ä MP	D.80
0648001698	CLI O 10-3 GE/SW Z MP	D.80
0648001699	CLI O 10-3 GE/SW Å MP	D.80
0648001738	CLI O 10-3 GE/SW + MP	D.80
0648001740	CLI O 10-3 GE/SW - MP	D.80
0648001746	CLI O 10-3 GE/SW ET MP	D.80
0648009999	CLI O 10-3 SDR MP	D.79
0648101502	CLI O 20-3 GE/SW 0 MP	D.81
0648101505	CLI O 20-3 GE/SW 1 MP	D.81
0648101508	CLI O 20-3 GE/SW 2 MP	D.81
0648101511	CLI O 20-3 GE/SW 3 MP	D.81
0648101514	CLI O 20-3 GE/SW 4 MP	D.81
0648101517	CLI O 20-3 GE/SW 5 MP	D.81
0648101520	CLI O 20-3 GE/SW 6 MP	D.81
0648101523	CLI O 20-3 GE/SW 7 MP	D.81
0648101526	CLI O 20-3 GE/SW 8 MP	D.81
0648101529	CLI O 20-3 GE/SW 9 MP	D.81
0648101637	CLI O 20-3 GE/SW A MP	D.81
0648101639	CLI O 20-3 GE/SW B MP	D.81
0648101641	CLI O 20-3 GE/SW C MP	D.81
0648101643	CLI O 20-3 GE/SW D MP	D.81
0648101645	CLI O 20-3 GE/SW E MP	D.81
0648101647	CLI O 20-3 GE/SW F MP	D.81
0648101649	CLI O 20-3 GE/SW G MP	D.81
0648101651	CLI O 20-3 GE/SW H MP	D.81
0648101653	CLI O 20-3 GE/SW I MP	D.81
0648101655	CLI O 20-3 GE/SW J MP	D.81
0648101657	CLI O 20-3 GE/SW K MP	D.81
0648101659	CLI O 20-3 GE/SW L MP	D.81
0648101661	CLI O 20-3 GE/SW M MP	D.81
0648101663	CLI O 20-3 GE/SW N MP	D.81
0648101665	CLI O 20-3 GE/SW O MP	D.81
0648101667	CLI O 20-3 GE/SW P MP	D.81
0648101669	CLI O 20-3 GE/SW Q MP	D.81
0648101671	CLI O 20-3 GE/SW R MP	D.81
0648101673	CLI O 20-3 GE/SW S MP	D.81
0648101676	CLI O 20-3 GE/SW T MP	D.81
0648101679	CLI O 20-3 GE/SW U MP	D.81
0648101681	CLI O 20-3 GE/SW V MP	D.81
0648101683	CLI O 20-3 GE/SW W MP	D.81
0648101687	CLI O 20-3 GE/SW X MP	D.81
0648101695	CLI O 20-3 GE/SW Ö MP	D.82
0648101696	CLI O 20-3 GE/SW Y MP	D.81
0648101697	CLI O 20-3 GE/SW Ä MP	D.82
0648101698	CLI O 20-3 GE/SW Z MP	D.81
0648101699	CLI O 20-3 GE/SW Å MP	D.82
0648101738	CLI O 20-3 GE/SW + MP	D.82
0648101740	CLI O 20-3 GE/SW - MP	D.82
0648109999	CLI O 20-3 SDR MP	D.79
0648201502	CLI O 30-3 GE/SW 0 MP	D.82
0648201505	CLI O 30-3 GE/SW 1 MP	D.82
0648201508	CLI O 30-3 GE/SW 2 MP	D.82

Order No.	Type	Page
0648201511	CLI O 30-3 GE/SW 3 MP	D.82
0648201514	CLI O 30-3 GE/SW 4 MP	D.82
0648201517	CLI O 30-3 GE/SW 5 MP	D.82
0648201520	CLI O 30-3 GE/SW 6 MP	D.82
0648201523	CLI O 30-3 GE/SW 7 MP	D.82
0648201526	CLI O 30-3 GE/SW 8 MP	D.82
0648201529	CLI O 30-3 GE/SW 9 MP	D.82
0648201637	CLI O 30-3 GE/SW A MP	D.83
0648201639	CLI O 30-3 GE/SW B MP	D.83
0648201641	CLI O 30-3 GE/SW C MP	D.83
0648201643	CLI O 30-3 GE/SW D MP	D.83
0648201645	CLI O 30-3 GE/SW E MP	D.83
0648201647	CLI O 30-3 GE/SW F MP	D.83
0648201649	CLI O 30-3 GE/SW G MP	D.83
0648201651	CLI O 30-3 GE/SW H MP	D.83
0648201653	CLI O 30-3 GE/SW I MP	D.83
0648201655	CLI O 30-3 GE/SW J MP	D.83
0648201657	CLI O 30-3 GE/SW K MP	D.83
0648201659	CLI O 30-3 GE/SW L MP	D.83
0648201661	CLI O 30-3 GE/SW M MP	D.83
0648201663	CLI O 30-3 GE/SW N MP	D.83
0648201665	CLI O 30-3 GE/SW O MP	D.83
0648201667	CLI O 30-3 GE/SW P MP	D.83
0648201669	CLI O 30-3 GE/SW Q MP	D.83
0648201671	CLI O 30-3 GE/SW R MP	D.83
0648201673	CLI O 30-3 GE/SW S MP	D.83
0648201676	CLI O 30-3 GE/SW T MP	D.83
0648201679	CLI O 30-3 GE/SW U MP	D.83
0648201681	CLI O 30-3 GE/SW V MP	D.83
0648201683	CLI O 30-3 GE/SW W MP	D.83
0648201687	CLI O 30-3 GE/SW X MP	D.83
0648201695	CLI O 30-3 GE/SW Ö MP	D.83
0648201696	CLI O 30-3 GE/SW Y MP	D.83
0648201697	CLI O 30-3 GE/SW Ä MP	D.83
0648201698	CLI O 30-3 GE/SW Z MP	D.83
0648201699	CLI O 30-3 GE/SW Ä MP	D.83
0648201738	CLI O 30-3 GE/SW + MP	D.83
0648201740	CLI O 30-3 GE/SW - MP	D.83
0648201746	CLI O 30-3 GE/SW ET MP	D.83
0648209999	CLI O 30-3 SDR MP	D.80
0648300000	CLI RS 5 MDCLI C 1	D.92

0680000000

0689600000	CLI O 10-3 GE NE MP	D.79
0689700000	CLI O 20-3 GE NE MP	D.79
0689800000	CLI O 30-3 GE NE MP	D.79

1000000000

1001140001	ESG X20 MC NE WS	E.23
1001150001	ESG X20 MC NE BL	E.23
1001160001	ESG X20 MC NE OR	E.23
1001170001	ESG X20 MC NE RT	E.23
1002680000	WSMH 176mm	D.96
1003380000	THM WO T 24.5/100 WS	D.42
1003400000	LM MT300 89/34 WS	E.69
1003410000	THM MT30X 89/60 SI	E.66
1003420000	THM WO T 24.5/62 WS	D.42
1005710000	PLOTTER PEN 0.50 P-INK	F.11
1005710000	PLOTTER PEN 0.50 P-INK	F.13
1009320000	CC 30/60 MC NE GE	E.40

1010000000

1010860000	ESG 9/20 L MC NE GE	E.20
1011320000	DEK 5/6 PLUS MC NE WS	C.16
1011410000	MF-W 9/5.2F MC NE WS	C.55
1011420000	MF-W 9/6.2F MC NE WS	C.56
1011430000	MF-W 9/4.2F MC NE WS	C.53
1011440000	PLOTTERPEN 0,7	F.11
1011440000	PLOTTERPEN 0,7	F.13
1011450000	PLOTTER PEN 0.70 P-INK	F.11
1011450000	PLOTTER PEN 0.70 P-INK	F.13
1014640000	SM 27/18 MC NE GR	E.29
1014650000	SM 22/22 K MC NE GR	E.28
1015220000	SCT-C 4.6/100	D.97
1015230000	SCT-C 4.6/125	D.97
1015240000	SCT-C 4.6/150	D.97
1015250000	SCT-C 4.6/200	D.97
1015270000	SCT-C 4.6/360	D.97
1015280000	SCT-C 4.6/520	D.97
1015290000	SCT-C 4.6/680	D.97
1015300000	SCT-C 4.6/840	D.97
1015310000	SCT-C 7.9/200	D.97
1015320000	SCT-C 7.9/360	D.97
1015330000	SCT-C 7.9/520	D.97
1015340000	SCT-C 7.9/680	D.97
1015350000	SCT-C 7.9/840	D.97
1016030000	DMC 12/27 MC NE WS	E.7
1018190000	DMC 12/27 MC NE GE	E.7

1020000000

1024140000	PJ PRO TNAW	F.9
1025220000	SFC 3/12 MC NE WS	D.11
1025230000	SFC 3/12 MC NE GE	D.11
1025240000	SFC 3/12 MC NE RT	D.11
1025250000	SFC 3/12 MC NE BL	D.11
1025260000	SFC 3/21 MC NE WS	D.11
1025270000	SFC 3/21 MC NE GE	D.11
1025290000	SFC 3/21 MC NE RT	D.11
1025300000	SFC 3/21 MC NE BL	D.11
1025310000	SFC 3/30 MC NE WS	D.11
1025320000	SFC 3/30 MC NE GE	D.11
1025330000	SFC 3/30 MC NE RT	D.11
1025340000	SFC 3/30 MC NE BL	D.11
1025550000	SFC 3/12 MC SDR	D.11
1025560000	SFC 3/21 MC SDR	D.11
1025570000	SFC 3/30 MC SDR	D.11
1025680000	DEK 5/30 MC SDR	C.19
1026550000	ESG X20 10/7 MC NE WS	E.23
1026560000	ESG X20 10/7 MC NE BL	E.23
1026570000	ESG X20 10/7 MC NE RT	E.23
1026580000	ESG X20 10/7 MC NE OR	E.23
1027040000	PJ PRO TNTK INK K	F.9
1027050000	PJ PRO TNTK INK C	F.9
1027060000	PJ PRO TNTK INK M	F.9
1027070000	PJ PRO TNTK INK Y	F.9
1027110000	PJ PRO TINTENSET FARBE	F.9
1027280000	ESG-M 9/17 MC NE WS	E.25
1027290000	ESG-M 8/20 MC NE WS	E.25
1027310000	MF-W 9/5 MC NE GE	C.54
1027620000	THM MT30X 17/8 GE	E.66
1027830000	SM 27/12.5 K MC NE GR	E.29

1030000000

1038650000	DEK 5/6 PLUS MC SDR	C.16
1038670000	MF 12/5 MC CABUR SDR	C.46
1038690000	MF 4/5.2 MC SDR	C.46
1038730000	MF 5/10 MC SDR	C.49
1038750000	MF-W 9/4.2F MC SDR	C.53
1038760000	MF-W 9/5.2F MC SDR	C.55
1038770000	MF-W 9/6.2F MC SDR	C.56
1038790000	WS 8/5 PLUS MC SDR	C.22
1038820000	WS 8/6 PLUS MC SDR	C.27
1038830000	DMC 12/27 MC SDR	E.7
1038840000	ESG 5/10 MC SDR	E.9
1038850000	ESG 8/11 MC SDR	E.14
1038860000	ESG 8/13.5/43.3 SAI SDR	E.14
1038870000	ESG 8/17 L MC SDR	E.15
1038880000	ESG 9/10 MC SDR	E.17
1038890000	ESG X20 MC SDR	E.23
1038910000	ESG-M 8/20 MC SDR	E.25
1038920000	ESG-M 9/17 MC SDR	E.25
1038930000	ESG X20 10/7 MC SDR	E.23
1038940000	ESG 9/6 MC SDR	E.22

1040000000

1045490000	ET S7-200-TU-A4-2	E.68
1045500000	ET S7-200-TU-A4-1	E.68
1045570000	ELS 6/30 MC NE WS	C.86
1045570000	ELS 6/30 MC NE WS	C.91
1045570000	ELS 6/30 MC NE WS	D.19
1045570000	ELS 6/30 MC NE WS	D.21
1045580000	ELS 6/30 MC NE GE	C.86
1045580000	ELS 6/30 MC NE GE	C.91
1045580000	ELS 6/30 MC NE GE	D.19
1045580000	ELS 6/30 MC NE GE	D.21
1045620000	ELS 16/40 MC NE WS	C.88
1045620000	ELS 16/40 MC NE WS	C.92
1045620000	ELS 16/40 MC NE WS	D.19
1045620000	ELS 16/40 MC NE WS	D.22
1045630000	ELS 16/40 MC NE GE	C.88
1045630000	ELS 16/40 MC NE GE	C.92
1045630000	ELS 16/40 MC NE GE	D.19
1045630000	ELS 16/40 MC NE GE	D.22
1045640000	ELS 7/40 MC NE WS	C.88
1045640000	ELS 7/40 MC NE WS	C.91
1045650000	ELS 7/40 MC NE GE	C.88
1045650000	ELS 7/40 MC NE GE	C.91
1045660000	ELS 6/30 MC SDR	C.91
1045660000	ELS 6/30 MC SDR	D.19
1045690000	ELS 16/40 MC SDR	C.92
1045690000	ELS 16/40 MC SDR	D.19
1045700000	ELS 7/40 MC SDR	C.91
1045980000	MF-W 9/5F MC NE GR	C.54
1046320000	WS 10/5 PLUS MC SDR	C.23
1046330000	WS 10/6 PLUS MC SDR	C.28
1046340000	DEK 5/6.5 PLUS MC NE WS	C.17
1046350000	DEK 5/8 PLUS MC NE WS	C.18
1046360000	DEK 5/6.5 PLUS MC SDR	C.17
1046370000	DEK 5/8 PLUS MC SDR	C.18
1046380000	WS 10/5 PLUS MC NE WS	C.23
1046390000	WS 10/6 PLUS MC NE WS	C.28

1050000000

1051870000	SFX 11/60 MC NE BL	D.9
1057580000	CC 15/60 04MM MC NE WS	E.39
1058090000	MCP EP SFC 3	F.11
1058090000	MCP EP SFC 3	F.13
1058740000	THM MT30X 15/9 GE	E.66
1058750000	THM MT30X 15/9 WS	E.66
1059200000	CB-R 200/7.5 NATUR	D.98
1059210000	CB-R 200/7.5 BLACK	D.98
1059220000	CB-R 250/7.5 NATUR	D.98
1059230000	CB-R 250/7.5 BLACK	D.98
1059240000	CB-R 350/7.5 NATUR	D.98
1059250000	CB-R 350/7.5 BLACK	D.98
1059780000	THM GEW 15/6 WS	E.66
1059790000	THM GEW 15/6 GE	E.66
1059800000	THM GEW 17/9 WS	E.66
1059810000	THM GEW 17/9 GE	E.66
1059820000	THM GEW 18/6 WS	E.66
1059830000	THM GEW 18/6 GE	E.66
1059840000	THM GEW 18/9 WS	E.66
1059850000	THM GEW 18/9 GE	E.66
1059870000	THM GEW 20/8 WS	E.66
1059880000	THM GEW 20/8 GE	E.66
1059990000	CC 15/60 04MM MC NE SI	E.39

1060000000

1060010000	CC 15/60 04MM MC SDR	E.39
1061810000	THM MT30X 101/74 GE	E.66
1062000000	SFC 2.5/12 MC NE WS	D.11
1062010000	SFC 2.5/12 MC NE GE	D.11
1062020000	SFC 2.5/12 MC NE RT	D.11
1062030000	SFC 2.5/12 MC NE BL	D.11
1062040000	SFC 2.5/12 MC SDR	D.11
1062050000	SFC 2.5/21 MC NE WS	D.11
1062070000	SFC 2.5/21 MC NE GE	D.11
1062080000	SFC 2.5/21 MC NE RT	D.11
1062090000	SFC 2.5/21 MC NE BL	D.11
1062110000	SFC 2.5/21 MC SDR	D.11
1062860000	WAD 27 M. BL.	C.85
1062960000	WAD 27 NEUTRAL	C.85
1069080000	WS 10/6 MC M NE BL	C.28
1069090000	WS 10/6 MC M NE VI	C.28

1070000000

1072640000	CC 15/60 MC NE GR	E.39
1072650000	CC 15/60 K MC NE GR	E.39
1072670000	CC 30/60 MC NE GR	E.40
1072680000	CC 30/60 K MC NE GR	E.40
1072690000	THM MT30X 15/4 GE	E.66
1073340000	SM 27/18 K MC NE GR	E.29
1076890000	SFX 11/60 MC NE GE V0	D.9
1076970000	CC 15/49 MC NE GE	E.38
1078320000	CC 30/60 K MC NE GE	E.40
1079470000	SM 27/8 MC NE GR	E.28
1079480000	SM 27/8 K MC NE GR	E.28
1079490000	SM 27/12.5 MC NE GR	E.29
1079510000	SM 27/27 MC NE GR	E.30
1079520000	SM 27/27 K MC NE GR	E.30
1079530000	CC 15/17 MC NE GR	E.37
1079540000	CC 15/17 K MC NE GR	E.37
1079550000	CC 15/27 MC NE GR	E.37
1079560000	CC 15/27 K MC NE GR	E.37
1079570000	CC 15/49 MC NE GR	E.38
1079580000	CC 15/49 K MC NE GR	E.38

1080000000

1082490000	ESG 6.6/11 BHZ 5.00/02	E.11
1082520000	ESG 6.6/15 BHZ 5.00/03	E.12
1082540000	ESG 6.6/20 BHZ 5.00/04	E.12
1083150000	CC 30/60 04MM MC NE WS	E.40
1083160000	CC 30/60 04MM MC NE GE	E.40
1083170000	CC 30/60 04MM MC NE GR	E.40
1083190000	CC 30/60 04MM MC SDR	E.40
1083230000	SFX 30/60 MC NE WS	D.9
1083240000	SFX 30/60 MC NE GE	D.9
1083260000	SFX 30/60 MC SDR	D.9
1085430000	CC 30/60 K MC NE RT	E.40

1090000000

1095590000	THM ET S7 50/25 GE	E.67
1096170000	THM EL VIN 15 WS 5L 30M	E.65

1100000000

1105550000	THM EL VIN 24 WS 3L 30M	E.65
1105560000	THM EL VIN 38 WS 30M	E.65
1107340000	TABPACK FLAG 54/8 WS	E.70
1107350000	THM GEW FLAG 54/8 WS	E.67
1109130000	THM WO 24.5/62 WS	D.41
1109140000	THM WO 25.4/95.2 WS	D.41
1109150000	THM WO 50.8/150 WS	D.41
1109180000	THM WO 50.8/150 GE	D.41

1110000000

1111190000	CC 15/45 MC SDR	E.38
1111200000	CC 15/45 K MC SDR	E.38
1111210000	CC 15/45 MC NE WS	E.38
1111230000	CC 15/45 MC NE GE	E.38
1111240000	CC 15/45 MC NE GR	E.38
1111250000	CC 15/45 K MC NE WS	E.38
1111260000	CC 15/45 K MC NE GE	E.38
1111270000	CC 15/45 K MC NE GR	E.38
1112910000	WAD 5 MC NE WS	C.81
1112920000	WAD 5 MC NE GE	C.81
1112930000	WAD 5 MC SDR	C.81
1112940000	WAD 8 MC NE WS	C.82
1112950000	WAD 8 MC NE GE	C.82
1112970000	WAD 8 MC SDR	C.82

1120000000

1120450000	WAD 5 MC B GE/SW	C.81
1120470000	WAD 8 MC B GE/SW	C.82

1130000000

1131800000	SM 27/27 K MC NE GE	E.30
1131810000	SM 27/12.5 K MC NE GE	E.29
1131820000	SM 27/8 K MC NE GE	E.28
1131830000	SM 22/22 K MC NE GE	E.28
1131840000	SM 27/27 MC NE GE	E.30
1131850000	SM 27/18 MC NE GE	E.29
1131860000	SM 27/12.5 MC NE GE	E.29
1131870000	SM 27/8 MC NE GE	E.28
1131890000	CC 15/60 K MC NE GE	E.39
1131910000	CC 15/27 K MC NE GE	E.37
1131920000	CC 15/17 K MC NE GE	E.37
1131930000	CC 15/17 MC NE GE	E.37
1131940000	CC 15/27 MC NE GE	E.37
1131960000	CC 15/60 MC NE GE	E.39
1131970000	CC 15/49 K MC NE GE	E.38
1136810000	ESG 6/15 F MC NE WS	E.10
1138400000	CC 85/54 MC NE WS	E.41
1138410000	CC 85/54 MC NE GE	E.41
1138420000	CC 85/54 MC NE GR	E.41
1138430000	CC 85/54 K MC NE WS	E.41
1138440000	CC 85/54 K MC NE GE	E.41
1138450000	CC 85/54 K MC NE GR	E.41
1138460000	CC 85/54 MC SDR	E.41
1138470000	CC 85/54 K MC SDR	E.41
1139880000	MCP AP BASIC	F.13

1140000000

1140460000	LM MT300 35/16 WS	E.69
1140490000	THM-TWINMARK	F.19

1150000000

1158820000	CC 30/60 04MM MC NE GN	E.40
1158830000	CC 30/60 04MM MC NE RT	E.40
1158840000	CC 30/60 04MM MC NE BL	E.40

1160000000

1161730000	THM ET S7 300-2 TU	E.67
1161740000	THM ET S7 300-2 GE	E.67
1161750000	THM ET S7 300-1 TU	E.67
1161770000	THM ET S7 300-1 GE	E.67
1161780000	THM ET S7 50/25 TU	E.67
1161790000	THM ET S7 50/12.5 TU	E.67
1161810000	THM ET S7 50/12.5 GE	E.67

1170000000

1175850000	DKB CC 85/54	E.55

1190000000

1191390000	ELS 6/30 K MC NE WS	C.91
1191390000	ELS 6/30 K MC NE WS	D.19

1200000000

1208970000	WS 7.8/9.2 PLUS MC NE GR	C.32

1220000000

1221520000	ESG 6.6/20 BHZ 5.00 SDR	E.12
1226620000	DKB CC 85/27	E.50

1230000000

1238340000	DEK 5/5 MC NE OR	C.14

1240000000

1248460000	CC 85/54 04MM MC SDR	E.42
1248470000	CC DIA 30/4.2 MC SDR	E.43
1248480000	CC 85/54 04MM MC NE WS	E.42
1248490000	CC 85/54 04MM MC NE GE	E.42
1248510000	CC 85/54 04MM MC NE GR	E.42
1248520000	CC DIA 30/4.2 MC NE WS	E.43
1248530000	CC DIA 30/4.2 MC NE GE	E.43
1248540000	CC DIA 30/4.2 MC NE GR	E.43
1248550000	SM 18/9.5 K MC SDR	E.27
1248560000	SM 19/42 K MC SDR	E.27
1248570000	SM 45/45-24 MC SDR	E.33
1248580000	SM 18/9.5 K MC NE WS	E.27
1248590000	SM 18/9.5 K MC NE GE	E.27
1248610000	SM 18/9.5 K MC NE GR	E.27
1248620000	SM 19/42 K MC NE WS	E.27

Order No.	Type	Page
1248630000	SM 19/42 K MC NE GE	E.27
1248640000	SM 19/42 K MC NE GR	E.27
1248650000	SM 45/45-24 MC NE WS	E.33
1248660000	SM 45/45-24 MC NE GE	E.33
1248670000	SM 45/45-24 MC NE GR	E.33
1248740000	SFX 9/40 S MC SDR	D.9
1248750000	SFX 10/60 S MC SDR	D.9
1248760000	SFX 9/40 S MC NE WS	D.9
1248770000	SFX 9/40 S MC NE GE	D.9
1248780000	SFX 9/40 S MC NE RT	D.9
1248790000	SFX 9/40 S MC NE BL	D.9
1248810000	SFX 10/60 S MC NE WS	D.9
1248820000	SFX 10/60 S MC NE GE	D.9
1248830000	SFX 10/60 S MC NE RT	D.9
1248840000	SFX 10/60 S MC NE BL	D.9

1250000000

1250080000	MF 5/12 MC SDR	C.50
1250090000	MF 5/12 MC NE WS	C.50

1260000000

1266120000	CC DIA 30/3.5 MC NE WS	E.42
1266130000	CC DIA 30/3.5 MC NE GE	E.42
1266140000	CC DIA 30/3.5 MC NE GR	E.42
1266150000	CC DIA 30/3.5 SDR	E.42

1270000000

1270640000	WS 7.8/9.2 PLUS MC SDR	C.32
1276960001	DEK 8 FWZ 1-10	C.11
1276960011	DEK 8 FWZ 11-20	C.11
1276960021	DEK 8 FWZ 21-30	C.11
1276960031	DEK 8 FWZ 31-40	C.11
1276960041	DEK 8 FWZ 41-50	C.11
1276960051	DEK 8 FWZ 51-60	C.11
1278600000	CB 98/2.5 NATUR	D.98
1278700000	CB 140/3.5 NATUR	D.98
1278800000	CB 200/4.8 NATUR	D.98
1278900000	CB 290/4.5 NATUR	D.98
1279000000	CB 360/4.5 NATUR	D.98
1279100000	CB 365/7.5 NATUR	D.98
1279200000	CBH 8.1/6.2 NATUR	D.99
1279300000	CBDM 200/4.5 NA	D.99

1280000000

1288320000	CC 15/17 K MC NE RT	E.37
1288330000	CC 15/27 K MC NE RT	E.37
1288340000	CC 15/60 K MC NE RT	E.39
1288380000	CC 15/49 K MC NE RT	E.38
1288390000	CC 85/54 K MC NE RT	E.41
1289200000	CBH 19/19 NATUR	D.99
1289400000	CBH 27/27 NATUR	D.99
1289660001	DEK 8 FSZ 1-10	C.11
1289660011	DEK 8 FSZ 11-20	C.11
1289660021	DEK 8 FSZ 21-30	C.11
1289660031	DEK 8 FSZ 31-40	C.11
1289660041	DEK 8 FSZ 41-50	C.11
1289660051	DEK 8 FSZ 51-60	C.11

1290000000

1296000000	KABELBINDERZANGE RT-1	D.98
1296000000	KABELBINDERZANGE RT-1	D.99

1300000000

1302920000	THM MMP EXT.RH	F.15
1304060000	CC 15/60 04MM MC NE GR	E.39
1307670000	THM EL VIN 15 WS 2L 30M	E.65

1310000000

1318061187	DEK 6 GW PE	C.11
1318061198	DEK 6 GW +	C.11
1318061199	DEK 6 GW -	C.11
1318061202	DEK 6 GW ERDE	C.11
1318640000	SFR 1/12 MC NE WS	D.7
1318650000	SFR 1/12 MC NE GE	D.7
1318660000	SFR 2/12 MC NE WS	D.7
1318670000	SFR 2/12 MC NE GE	D.7
1318680000	SFR 3/12 MC NE WS	D.7
1318690000	SFR 3/12 MC NE GE	D.7
1318710000	SFR 1/21MC NE WS	D.7
1318720000	SFR 1/21 MC NE GE	D.7
1318730000	SFR 2/21 MC NE WS	D.7
1318740000	SFR 2/21 MC NE GE	D.7
1318750000	SFR 3/21 MC NE WS	D.7
1318760000	SFR 3/21 MC NE GE	D.7
1318770000	SFR 1/12 MC SDR	D.7
1318780000	SFR 2/12 MC SDR	D.7
1318790000	SFR 3/12 MC SDR	D.7
1318810000	SFR 1/21 MC SDR	D.7
1318820000	SFR 2/21 MC SDR	D.7
1318830000	SFR 3/21 MC SDR	D.7

1320000000

1323440000	SFX 9/24 S MC NE WS	D.9
1323450000	SFX 9/24 S MC NE GE	D.9
1323470000	SFX 9/24 S MC NE RT	D.9
1323480000	SFX 9/24 S MC NE BL	D.9
1323490000	SFX 9/24 S MC SDR	D.9
1323500000	SM 46/46-30 MC NE WS	E.33
1323510000	SM 46/46-30 MC NE GE	E.33
1323520000	SM 46/46-30 MC NE GR	E.33
1323530000	SM 42/42-30 K MC NE WS	E.32
1323540000	SM 42/42-30 K MC NE GE	E.32
1323550000	SM 42/42-30 K MC NE GR	E.32
1323570000	SM 44/44-21 MC NE WS	E.32
1323580000	SM 44/44-21 MC NE GE	E.32
1323600000	SM 44/44-21 MC NE GR	E.32
1323610000	SM 46/46-30 MC SDR	E.33
1323620000	SM 42/42-30 K MC SDR	E.32
1323640000	SM 44/44-21 MC SDR	E.32
1323700000	PM 2.7/2.6 MC SDR	C.34
1323710000	PM 2.7/2.6 MC NE WS	C.34
1323720000	TM-I 12/18 MC SDR	D.13
1323730000	TM-I 12/18 MC NE WS	D.13
1323740000	SM DIA 60-22 MC SDR	E.34
1323750000	SM DIA 60-22 K MC NE GE	E.34
1324380000	PRINTJET ADVANCED 230V	F.9
1327600000	CC-M 85/54 AL	E.55
1327620000	CC-M 85/54 ST	E.55
1327630000	CC-M 27/18 AL	E.49
1327640000	CC-M 27/18 ST	E.49
1327650000	CC-M 85/27 AL	E.50
1327670000	CC-M 85/27 ST	E.50
1327680000	CC-M 30/60 AL	E.57
1327690000	CC-M 30/60 ST	E.57
1327700000	CC-M 15/60 AL	E.56
1327720000	CC-M 15/60 ST	E.56
1327730000	CC-M 15/45 AL	E.52
1327740000	CC-M 15/45 ST	E.52
1327750000	CC-M DIA 30 AL	E.59
1327770000	CC-M DIA 30 ST	E.59
1327780000	SFX-M 11/60 AL	D.25
1327790000	SFX-M 11/60 ST	D.25
1327800000	CC-M 85/54 4X3 AL	E.55
1327820000	CC-M 85/54 4X3 ST	E.55
1327830000	CC-M 85/27 2X3 AL	E.50
1327840000	CC-M 85/27 2X3 ST	E.50
1327850000	CC-M 30/60 2X3 AL	E.57
1327870000	CC-M 30/60 2X3 ST	E.57
1327880000	CC-M 15/60 2X3 AL	E.56
1327890000	CC-M 15/60 2X3 ST	E.56
1327900000	CC-M 15/45 2X3 AL	E.53
1327920000	CC-M 15/45 2X3 ST	E.53

1330000000

1331600000	THM MMP CUTTER	F.15
1336680000	SM 37.5/17 MC SDR	E.30
1336710000	SM 37.5/17 MC NE WS	E.30
1336720000	SM 37.5/17 MC NE GR	E.30
1338650000	PJ ADV TNTK INK Y	F.9
1338670000	PJ ADV TNTK INK M	F.9
1338680000	PJ ADV TNTK INK C	F.9
1338690000	PJ ADV TNTK INK K	F.9
1338700000	PRINTJET ADVANCED 115V	F.9
1338710000	PJ ADV TNAW	F.9
1338720000	PJ ADV TNTK INK SET	F.9
1339570000	THM ESO 7 PA WS	D.21
1339570000	THM ESO 7 PA WS	E.67
1339580000	THM ESO 7 PA GE	D.21
1339580000	THM ESO 7 PA GE	E.67

1340000000

1341030000	INLAY CC-M 85/54	E.55
1341030000	INLAY CC-M 85/54	E.55
1341040000	INLAY CC-M 27/18	E.49
1341040000	INLAY CC-M 27/18	E.49
1341050000	INLAY CC-M 85/27	E.50
1341050000	INLAY CC-M 85/27	E.50
1341070000	INLAY CC-M 30/60	E.57
1341070000	INLAY CC-M 30/60	E.57
1341080000	INLAY CC-M 15/60	E.56
1341080000	INLAY CC-M 15/60	E.56
1341090000	INLAY CC-M 15/45	E.52
1341090000	INLAY CC-M 15/45	E.53
1341100000	INLAY CC-M DIA 30	E.59
1341110000	INLAY SFX-M 11/60	D.25
1341110000	INLAY SFX-M 11/60	D.25
1341110000	INLAY SFX-M 11/60	D.26
1341120000	INLAY CC-M UNIVERSAL	D.25
1341120000	INLAY CC-M UNIVERSAL	D.25
1341120000	INLAY CC-M UNIVERSAL	D.26
1341120000	INLAY CC-M UNIVERSAL	E.49
1341120000	INLAY CC-M UNIVERSAL	E.49
1341120000	INLAY CC-M UNIVERSAL	E.50
1341120000	INLAY CC-M UNIVERSAL	E.50
1341120000	INLAY CC-M UNIVERSAL	E.52
1341120000	INLAY CC-M UNIVERSAL	E.53
1341120000	INLAY CC-M UNIVERSAL	E.55
1341120000	INLAY CC-M UNIVERSAL	E.55
1341120000	INLAY CC-M UNIVERSAL	E.56
1341120000	INLAY CC-M UNIVERSAL	E.56
1341120000	INLAY CC-M UNIVERSAL	E.57
1341120000	INLAY CC-M UNIVERSAL	E.57
1341120000	INLAY CC-M UNIVERSAL	E.59
1341130000	DKB CC 30/60	E.57
1341140000	DKB CC 27/18	E.49
1341150000	DKB CC 15/60	E.56
1341170000	DKB CC 15/45	E.52
1341180000	DKB CC DIA 30	E.59
1341590000	DEK 5/5 S MC SDR	C.15
1341620000	DEK 5/5 S MC NE WS	C.15
1341630000	DEK 5/8-11.5 MC NE WS	C.19
1346320000	ESG 6.6/15 BHZ 5.00 SDR	E.12
1346330000	ESG 6.6/11 BHZ 5.00 SDR	E.11

1350000000

1350340000	DEK 5/30 MC NE GE	C.19
1356500000	THM MT30X 17/9 SI	E.66
1358460000	DEK 5 FW 1,3,5,...99	C.11
1358560000	DEK 5 FW 2,4,...100	C.11
1358660000	DEK 6 FW 1,3,5...99	C.11
1358760000	DEK 6 FW 2,4,...100	C.11

1360000000

1364020000	DEK 5/6.5 PLUS MC NE GE	C.17
1369540000	SFX 30/60 MC NE BL	D.9
1369550000	SFX 30/60 MC NE RT	D.9

1370000000

1378710000	ESG 6/15 RIDER MC NE GE	E.10
1378720000	DEK 5/6 PLUS MC NE OR	C.16

1380000000

1382930000	THM WO VIN 17.8/34 WS	D.42
1382940000	THM WO VIN 12/18 WS	D.42

1390000000

1390400000	CC-M 18/52 2X3 AL	E.54
1390430000	INLAY CC-M 18/52	E.54
1391390000	THM MT30X 12/6 GE	E.66
1391400000	THM EL 60 SI 50M	E.65
1391410000	THM WO VIN 24.5/62 WS	D.42
1391430000	THM WO VIN 24.5/100 WS	D.42

1400000000

1409630000	TM-I 12/18 MC NE GE	D.13

1410000000

1411800000	ELS 16/40 K MC NE WS	C.92
1411800000	ELS 16/40 K MC NE WS	D.19
1415670000	CC-M 58/35 2X3 ST	E.52
1415680000	CC-M 70/48 2X3 ST	E.54
1415710000	CC-M 58/35 2X3 AL	E.52
1415720000	CC-M 70/48 2X3 AL	E.54
1415730000	CC-M 58/35 ST	E.51
1415740000	CC-M 70/48 ST	E.53
1415750000	CC-M 58/35 AL	E.51
1415770000	CC-M 70/48 AL	E.53
1415940000	INLAY CC-M 70/48	E.53
1415940000	INLAY CC-M 70/48	E.54
1415950000	INLAY CC-M 58/35	E.51
1415950000	INLAY CC-M 58/35	E.52
1416330000	THM MMP PERFORATOR	F.15
1419980000	THM EL 100 GE 30M	E.65

1420000000

1420010000	THM EL 100 WS 30M	E.65
1421160000	TM-I 12/18 MC NE BL	D.13
1421170000	TM-I 12/18 MC NE RT	D.13
1422560000	SFX-M 11/60-5 AL	D.25
1422570000	SFX-M 11/60-5 ST	D.25
1423220000	HSS-HF 1.2-2.4 EL Y13M	D.37
1423230000	HSS-HF 1.6-3.2 EL Y13M	D.37
1423240000	HSS-HF 2.4-4.8 EL Y13M	D.37
1423250000	HSS-HF 3.2-6.4 EL Y13M	D.37
1423260000	HSS-HF 4.8-9.5 EL Y13M	D.37
1423270000	HSS-HF 6.4-12.7 EL Y13M	D.37
1423280000	HSS-HF 9.5-19.1 EL Y10M	D.37
1423290000	HSS-HF 12.7-25.4 EL Y10M	D.37
1423330000	HSS-HF 1.2-2.4 EL W13M	D.37
1423340000	HSS-HF 1.6-3.2 EL W13M	D.37
1423350000	HSS-HF 2.4-4.8 EL W13M	D.37
1423360000	HSS-HF 3.2-6.4 EL W13M	D.37
1423370000	HSS-HF 4.8-9.5 EL W13M	D.37
1423380000	HSS-HF 6.4-12.7 EL W13M	D.37
1423390000	HSS-HF 9.5-19.1 EL W10M	D.37
1423410000	HSS-HF 12.7-25.4 EL W10M	D.37
1426210000	RIBBON HSS HF EL 40/300	D.36
1426210000	RIBBON HSS HF EL 40/300	D.36
1426210000	RIBBON HSS HF EL 40/300	D.37
1426210000	RIBBON HSS HF EL 40/300	D.37
1426210000	RIBBON HSS HF EL 40/300	D.38
1426210000	RIBBON HSS HF EL 40/300	F.15
1426210000	RIBBON HSS HF EL 40/300	F.17
1428170000	SM 27/18-22 K MC NE WS	E.31
1428180000	SM 27/18-22 K MC NE GR	E.31
1428190000	SM 36/18-30 K MC NE WS	E.31
1428200000	SM 36/18-30 K MC NE GR	E.31
1428480000	TM-I 23 MC NE WS	D.13
1428490000	TM-I 23 MC NE GE	D.13
1428510000	TM-I 23 MC NE RT	D.13
1428520000	TM-I 23 MC NE BL	D.13

1430000000

1432750000	SFX 11/60 MC NE WS V0	D.9
1433860000	SM 36/18-30 K MC SDR	E.31
1433870000	SM 27/18-22 K MC SDR	E.31
1433880000	TM-I 23 MC SDR	D.13
1434110000	CC DIA 30/3.5 MC NE RT	E.42

1460000000

1463800000	THM EL VIN 12 GE 30M	E.65
1463810000	THM EL VIN 25 GE 30M	E.65
1463820000	THM EL VIN 50 GE 30M	E.65
1463830000	THM EL VIN 100 GE 30M	E.65
1463870000	CC-M 27/18 2X3 AL	E.49
1463880000	CC-M 27/18 2X3 ST	E.49

1470000000

1474060000	CC-M 85/54 ST SDR	E.55
1474070000	CC-M 85/54 AL SDR	E.55
1474080000	CC-M 85/54 4X3 AL SDR	E.55
1474090000	CC-M 85/54 4X3 ST SDR	E.55
1474110000	CC-M 27/18 AL SDR	E.49
1474120000	CC-M 27/18 ST SDR	E.49
1474130000	CC-M 27/18 2X3 AL SDR	E.49
1474140000	CC-M 27/18 2X3 ST SDR	E.49
1474150000	CC-M 85/27 AL SDR	E.50
1474160000	CC-M 85/27 ST SDR	E.50
1474170000	CC-M 85/27 2X3 AL SDR	E.50
1474180000	CC-M 85/27 2X3 ST SDR	E.50
1474190000	CC-M 30/60 AL SDR	E.57
1474210000	CC-M 30/60 ST SDR	E.57
1474220000	CC-M 30/60 2X3 AL SDR	E.57
1474230000	CC-M 30/60 2X3 ST SDR	E.57
1474240000	CC-M 15/60 AL SDR	E.56
1474250000	CC-M 15/60 ST SDR	E.56
1474260000	CC-M 15/60 2X3 AL SDR	E.56
1474270000	CC-M 15/60 2X3 ST SDR	E.56
1474280000	CC-M 15/45 AL SDR	E.52
1474290000	CC-M 15/45 ST SDR	E.52
1474310000	CC-M 15/45 2X3 AL SDR	E.53
1474320000	CC-M 15/45 2X3 ST SDR	E.53
1474330000	CC-M 58/35 AL SDR	E.51
1474340000	CC-M 58/35 ST SDR	E.51
1474350000	CC-M 58/35 2X3 AL SDR	E.52
1474360000	CC-M 58/35 2X3 ST SDR	E.52
1474370000	CC-M 70/48 AL SDR	E.53
1474380000	CC-M 70/48 ST SDR	E.53
1474390000	CC-M 70/48 2X3 AL SDR	E.54
1474400000	CC-M 70/48 2X3 ST SDR	E.54
1474410000	CC-M DIA 30 AL SDR	E.59
1474420000	CC-M DIA 30 ST SDR	E.59
1474430000	SFX-M 11/60 ST SDR	D.25
1474440000	SFX-M 11/60-5 AL SDR	D.25
1474640000	THM EL VIN 45 WS 30M	E.65

1480000000

1483770000	INLAY CC-M 10/30	E.51
1483780000	CC-M 10/30 2X2.5 AL	E.51
1487680000	THM ET 200SP 12.8/31 TU	E.67
1487690000	THM ET 200SP 12.8/31 GE	E.67
1489530000	HSS 0.8-2.4 EL Y13M	D.36
1489540000	HSS 1.0-3.2 EL Y13M	D.36
1489550000	HSS 1.6-4.8 EL Y13M	D.36
1489560000	HSS 2.1-6.4 EL Y13M	D.36
1489570000	HSS 3.2-9.5 EL Y13M	D.36
1489580000	HSS 4.2-12.7 EL Y13M	D.36
1489590000	HSS 6.4-19.1 EL Y13M	D.36
1489620000	HSS 0.8-2.4 EL W13M	D.36
1489630000	HSS 1.0-3.2 EL W13M	D.36
1489640000	HSS 1.6-4.8 EL W13M	D.36
1489650000	HSS 2.1-6.4 EL W13M	D.36
1489660000	HSS 3.2-9.5 EL W13M	D.36
1489670000	HSS 4.2-12.7 EL W13M	D.36
1489680000	HSS 6.4-19.1 EL W13M	D.36

1500000000

1500150000	CC-M 10/30 2X2.5 ST	E.51
1500170000	CC-M 27/70 2X3 AL	E.58
1500190000	CC-M 27/70 2X3 ST	E.58
1500200000	CC-M 43/70 AL	E.58
1500220000	CC-M 43/70 ST	E.58

Order No.	Type	Page
1500230000	SFX-M 12/40-5 AL	D.26
1500240000	SFX-M 12/40-5 ST	D.26
1500250000	SFX-M 17/60-5 AL	D.26
1500270000	SFX-M 17/60-5 ST	D.26
1500290000	INLAY CC-M 27/70	E.58
1500300000	INLAY CC-M 43/70	E.58
1500330000	INLAY SFX-M 17/60	D.26
1500340000	DKB CC 43/70	E.58
1505140000	CC-M 10/30 2X2.5 AL SDR	E.51
1505150000	CC-M 10/30 2X2.5 ST SDR	E.51
1505160000	CC-M 27/70 2X3 AL SDR	E.58
1505170000	CC-M 27/70 2X3 ST SDR	E.58
1505180000	CC-M 43/70 AL SDR	E.58
1505190000	CC-M 43/70 ST SDR	E.58
1505210000	SFX-M 12/40-5 AL SDR	D.26
1505220000	SFX-M 12/40-5 ST SDR	D.26
1505230000	SFX-M 17/60-5 AL SDR	D.26
1505240000	SFX-M 17/60-5 ST SDR	D.26
1505350000	CC-M 18/52 2X3 ST	E.54
1505360000	CC-M 18/52 2X3 AL SDR	E.54
1505370000	CC-M 18/52 2X3 ST SDR	E.54
1505760000	HSS 0.8-2.4 EL Y30M	D.36
1505770000	HSS 1.0-3.2 EL Y30M	D.36
1505780000	HSS 1.6-4.8 EL Y30M	D.36
1505790000	HSS 2.1-6.4 EL Y30M	D.36
1505800000	HSS 3.2-9.5 EL Y30M	D.36
1505810000	HSS 4.2-12.7 EL Y30M	D.36
1505820000	HSS 6.4-19.1 EL Y30M	D.36
1505830000	HSS 8.5-25.4 EL Y30M	D.36
1505840000	HSS 0.8-2.4 EL W30M	D.36
1505850000	HSS 1.0-3.2 EL W30M	D.36
1505860000	HSS 1.6-4.8 EL W30M	D.36
1505870000	HSS 2.1-6.4 EL W30M	D.36
1505880000	HSS 3.2-9.5 EL W30M	D.36
1505890000	HSS 4.2-12.7 EL W30M	D.36
1505900000	HSS 6.4-19.1 EL W30M	D.36
1505910000	HSS 8.5-25.4 EL W30M	D.36
1507060000	TM 201/23 V0	D.17
1507070000	TM 202/23 V0	D.17
1507080000	TM 203/23 V0	D.17
1507090000	TM 204/23 V0	D.17
1507100000	TM 205/23 V0	D.17
1507110000	TM 206/23 V0	D.17
1507120000	TM 207/23 V0	D.17

1510000000

1513140000	HSS-HF 1.2-2.4 EL Y30M	D.38
1513150000	HSS-HF 1.6-3.2 EL Y30M	D.38
1513170000	HSS-HF 2.4-4.8 EL Y30M	D.38
1513180000	HSS-HF 3.2-6.4 EL Y30M	D.38
1513190000	HSS-HF 4.8-9.5 EL Y30M	D.38
1513200000	HSS-HF 6.4-12.7 EL Y30M	D.38
1513220000	HSS-HF 9.5-19.1 EL Y30M	D.38
1513230000	HSS-HF 12.7-25.4EL Y30M	D.38
1513240000	HSS-HF 1.2-2.4 EL W30M	D.38
1513250000	HSS-HF 1.6-3.2 EL W30M	D.38
1513270000	HSS-HF 2.4-4.8 EL W30M	D.38
1513280000	HSS-HF 3.2-6.4 EL W30M	D.38
1513290000	HSS-HF 4.8-9.5 EL W30M	D.38
1513300000	HSS-HF 6.4-12.7 EL W30M	D.38
1513320000	HSS-HF 9.5-19.1 EL W30M	D.38
1513330000	HSS-HF 12.7-25.4EL W30M	D.38
1517180000	THM EL 30 WS 30M	E.65
1517190000	THM EL 30 GE 30M	E.65
1517200000	THM EL 30 SI 30M	E.65
1517220000	THM EL 50 WS 30M	E.65
1517230000	THM EL 50 GE 30M	E.65
1517240000	THM EL 50 SI 30M	E.65
1517270000	THM EL 100 SI 30M	E.65

1520000000

1520930000	CC 85/27 MC NE WS	E.41
1520940000	CC 85/27 MC NE GE	E.41
1520970000	CC 85/27 MC NE GR	E.41
1520980000	ESG 9/26 SCM ECO MC NE WS	E.24
1520990000	ESG 9/26 SCM ECO MC NE GE	E.24
1521000000	ESG 9/26 SCM ECO MC NE GR	E.24
1521010000	MF 5/3.5 MC NE WS	C.42
1521040000	MF-W 9/3.5F MC NE WS	C.52
1525800000	ESG 9/26 SCM ECO MC SDR	E.24
1525830000	MF-W 9/3.5F MC SDR	C.52
1525840000	MF 5/3.5 MC SDR	C.42
1525850000	CC 85/27 MC SDR	E.41
1526100000	CC 85/27 K MC NE WS	E.41
1526120000	CC 85/27 K MC NE GE	E.41
1526130000	CC 85/27 K MC NE GR	E.41
1526140000	CC 85/27 K MC SDR	E.41

1560000000

1562740000	HSS-HF 1.2-2.4 EL R30M	D.38
1562750000	HSS-HF 1.6-3.2 EL R30M	D.38
1562770000	HSS-HF 2.4-4.8 EL R30M	D.38
1562780000	HSS-HF 3.2-6.4 EL R30M	D.38
1562790000	HSS-HF 4.8-9.5 EL R 30M	D.38
1562800000	HSS-HF 6.4-12.7 EL R30M	D.38
1562820000	HSS-HF 9.5-19.1 EL R30M	D.38
1562830000	HSS-HF 12.7-25.4 EL R30M	D.38
1562840000	HSS-HF 1.2-2.4 EL B30M	D.38
1562850000	HSS-HF 1.6-3.2 EL B30M	D.38
1562870000	HSS-HF 2.4-4.8 EL B30M	D.38
1562880000	HSS-HF 3.2-6.4 EL B30M	D.38
1562890000	HSS-HF 4.8-9.5 EL B 30M	D.38
1562900000	HSS-HF 6.4-12.7 EL B30M	D.38
1562920000	HSS-HF 9.5-19.1 EL B30M	D.38
1562930000	HSS-HF 12.7-25.4 EL B30M	D.38
1562940000	HSS-HF 1.2-2.4 EL G30M	D.38
1562950000	HSS-HF 1.6-3.2 EL G30M	D.38
1562970000	HSS-HF 2.4-4.8 EL G30M	D.38
1562980000	HSS-HF 3.2-6.4 EL G30M	D.38
1562990000	HSS-HF 4.8-9.5 EL G 30M	D.38
1563020000	HSS-HF 6.4-12.7 EL G30M	D.38
1563030000	HSS-HF 9.5-19.1 EL G30M	D.38
1563040000	HSS-HF 12.7-25.4 EL G30M	D.38
1568241055	CLI C 02-3 GE/SW Ä CD	D.54
1568241056	CLI C 02-3 GE/SW Ä CD	D.54
1568241057	CLI C 02-3 GE/SW Ö CD	D.54
1568241058	CLI C 02-3 GE NE CD	D.47
1568241502	CLI C 02-3 GE/SW 0 CD	D.53
1568241503	CLI C 02-3 SW/WS 0 CD	D.53
1568241505	CLI C 02-3 GE/SW 1 CD	D.53
1568241506	CLI C 02-3 BR/WS 1 CD	D.53
1568241508	CLI C 02-3 GE/SW 2 CD	D.53
1568241509	CLI C 02-3 RT/SW 2 CD	D.53
1568241511	CLI C 02-3 GE/SW 3 CD	D.53
1568241512	CLI C 02-3 OR/SW 3 CD	D.53
1568241514	CLI C 02-3 GE/SW 4 CD	D.53
1568241514	CLI C 02-3 GE/SW 4 CD	D.53
1568241517	CLI C 02-3 GE/SW 5 CD	D.53
1568241518	CLI C 02-3 GN/SW 5 CD	D.53
1568241520	CLI C 02-3 GE/SW 6 CD	D.53
1568241521	CLI C 02-3 BL/SW 6 CD	D.53
1568241523	CLI C 02-3 GE/SW 7 CD	D.53
1568241524	CLI C 02-3 VI/SW 7 CD	D.53
1568241526	CLI C 02-3 GE/SW 8 CD	D.53
1568241527	CLI C 02-3 GR/SW 8 CD	D.53
1568241529	CLI C 02-3 GE/SW 9 CD	D.53
1568241530	CLI C 02-3 WS/SW 9 CD	D.53
1568241530	CLI C 02-3 WS/SW 9 CD	D.53
1568241637	CLI C 02-3 GE/SW A CD	D.54
1568241639	CLI C 02-3 GE/SW B CD	D.54
1568241641	CLI C 02-3 GE/SW C CD	D.54
1568241643	CLI C 02-3 GE/SW D CD	D.54
1568241645	CLI C 02-3 GE/SW E CD	D.54
1568241647	CLI C 02-3 GE/SW F CD	D.54
1568241649	CLI C 02-3 GE/SW G CD	D.54
1568241651	CLI C 02-3 GE/SW H CD	D.54
1568241653	CLI C 02-3 GE/SW I CD	D.54
1568241655	CLI C 02-3 GE/SW J CD	D.54
1568241657	CLI C 02-3 GE/SW K CD	D.54
1568241659	CLI C 02-3 GE/SW L CD	D.54
1568241661	CLI C 02-3 GE/SW M CD	D.54
1568241663	CLI C 02-3 GE/SW N CD	D.54
1568241665	CLI C 02-3 GE/SW O CD	D.54
1568241667	CLI C 02-3 GE/SW P CD	D.54
1568241669	CLI C 02-3 GE/SW Q CD	D.54
1568241671	CLI C 02-3 GE/SW R CD	D.54
1568241673	CLI C 02-3 GE/SW S CD	D.54
1568241676	CLI C 02-3 GE/SW T CD	D.54
1568241679	CLI C 02-3 GE/SW U CD	D.54
1568241681	CLI C 02-3 GE/SW V CD	D.54
1568241683	CLI C 02-3 GE/SW W CD	D.54
1568241687	CLI C 02-3 GE/SW X CD	D.54
1568241696	CLI C 02-3 GE/SW Y CD	D.54
1568241698	CLI C 02-3 GE/SW Z CD	D.54
1568241726	CLI C 02-6 GE/SW A1 CD	D.55
1568241727	CLI C 02-6 GE/SW A2 CD	D.55
1568241728	CLI C 02-6 GE/SW L1 CD	D.55
1568241729	CLI C 02-6 GE/SW L2 CD	D.55
1568241730	CLI C 02-6 GE/SW L3 CD	D.55
1568241734	CLI C 02-9 GE/SW PEN CD	D.55
1568241735	CLI C 02-3 GE/SW Æ CD	D.52
1568241736	CLI C 02-3 GE/SW Ø CD	D.52
1568241737	CLI C 02-3 RT/SW + CD	D.54
1568241738	CLI C 02-3 GE/SW + CD	D.54
1568241740	CLI C 02-3 GE/SW - CD	D.54
1568241741	CLI C 02-3 BL/SW - CD	D.54
1568241742	CLI C 02-3 GE/SW / CD	D.54
1568241746	CLI C 02-3 GE/SW ET CD	D.54
1568241747	CLI C 02-3 GE/SW PET. CD	D.54
1568241748	CLI C 02-3 GE/SW . CD	D.54
1568241750	CLI C 02-3 GE/SW : CD	D.54
1568241751	CLI C 02-3 GE/SW = CD	D.54
1568241752	CLI C 02-3 GE/SW AC CD	D.54
1568249999	CLI C 02-3 SDR CD	D.49
1568250001	CLI C 1-3 WS/SW 1 CD	D.58
1568250002	CLI C 1-3 WS/SW 2 CD	D.58
1568250003	CLI C 1-3 WS/SW 3 CD	D.58
1568250004	CLI C 1-3 WS/SW 4 CD	D.58
1568250005	CLI C 1-3 WS/SW 5 CD	D.58
1568250006	CLI C 1-3 WS/SW 6 CD	D.58
1568250007	CLI C 1-3 WS/SW 7 CD	D.58
1568250008	CLI C 1-3 WS/SW 8 CD	D.58
1568251000	CLI C 1-3 WS/SW 0 CD	D.58
1568251021	CLI C 1-3 WS/SW A CD	D.59
1568251022	CLI C 1-3 WS/SW B CD	D.59
1568251023	CLI C 1-3 WS/SW C CD	D.59
1568251024	CLI C 1-3 WS/SW D CD	D.59
1568251025	CLI C 1-3 WS/SW E CD	D.59
1568251026	CLI C 1-3 WS/SW F CD	D.59
1568251027	CLI C 1-3 WS/SW G CD	D.59
1568251028	CLI C 1-3 WS/SW H CD	D.59
1568251029	CLI C 1-3 WS/SW I CD	D.59
1568251030	CLI C 1-3 WS/SW J CD	D.59
1568251031	CLI C 1-3 WS/SW K CD	D.59
1568251032	CLI C 1-3 WS/SW L CD	D.59
1568251033	CLI C 1-3 WS/SW M CD	D.59
1568251034	CLI C 1-3 WS/SW N CD	D.59
1568251035	CLI C 1-3 WS/SW O CD	D.59
1568251036	CLI C 1-3 WS/SW P CD	D.59
1568251037	CLI C 1-3 WS/SW Q CD	D.59
1568251038	CLI C 1-3 WS/SW R CD	D.59
1568251039	CLI C 1-3 WS/SW S CD	D.59
1568251040	CLI C 1-3 WS/SW T CD	D.59
1568251041	CLI C 1-3 WS/SW U CD	D.59
1568251042	CLI C 1-3 WS/SW V CD	D.59
1568251043	CLI C 1-3 WS/SW W CD	D.59
1568251044	CLI C 1-3 WS NE CD	D.48
1568251045	CLI C 1-3 WS/SW Y CD	D.59
1568251046	CLI C 1-3 WS/SW Z CD	D.59
1568251047	CLI C 1-3 WS/SW . CD	D.60
1568251048	CLI C 1-3 WS/SW + CD	D.60
1568251049	CLI C 1-3 WS/SW - CD	D.60
1568251050	CLI C 1-3 WS/SW / CD	D.60
1568251051	CLI C 1-3 WS/SW : CD	D.60
1568251052	CLI C 1-3 WS/SW = CD	D.60
1568251053	CLI C 1-3 WS/SW ET CD	D.60
1568251054	CLI C 1-3 WS/SW X CD	D.59
1568251055	CLI C 1-3 WS/SW ? CD	D.60
1568251057	CLI C 1-3 WS/SW Ö CD	D.60
1568251058	CLI C 1-3 WS/SW PET. CD	D.60
1568251502	CLI C 1-3 GE/SW 0 CD	D.58
1568251503	CLI C 1-3 SW/WS 0 CD	D.58
1568251505	CLI C 1-3 GE/SW 1 CD	D.58
1568251506	CLI C 1-3 BR/WS 1 CD	D.58
1568251508	CLI C 1-3 GE/SW 2 CD	D.58
1568251509	CLI C 1-3 RT/SW 2 CD	D.58
1568251511	CLI C 1-3 GE/SW 3 CD	D.58
1568251512	CLI C 1-3 OR/SW 3 CD	D.58
1568251514	CLI C 1-3 GE/SW 4 CD	D.58
1568251514	CLI C 1-3 GE/SW 4 CD	D.58
1568251517	CLI C 1-3 GE/SW 5 CD	D.58
1568251518	CLI C 1-3 GN/SW 5 CD	D.58
1568251520	CLI C 1-3 GE/SW 6 CD	D.58
1568251521	CLI C 1-3 BL/SW 6 CD	D.58
1568251523	CLI C 1-3 GE/SW 7 CD	D.58
1568251524	CLI C 1-3 VI/SW 7 CD	D.58
1568251526	CLI C 1-3 GE/SW 8 CD	D.58
1568251527	CLI C 1-3 GR/SW 8 CD	D.58
1568251529	CLI C 1-3 GE/SW 9 CD	D.58
1568251530	CLI C 1-3 WS/SW 9 CD	D.58
1568251530	CLI C 1-3 WS/SW 9 CD	D.58
1568251637	CLI C 1-3 GE/SW A CD	D.59
1568251639	CLI C 1-3 GE/SW B CD	D.59
1568251641	CLI C 1-3 GE/SW C CD	D.59
1568251643	CLI C 1-3 GE/SW D CD	D.59
1568251645	CLI C 1-3 GE/SW E CD	D.59
1568251647	CLI C 1-3 GE/SW F CD	D.59
1568251649	CLI C 1-3 GE/SW G CD	D.59
1568251651	CLI C 1-3 GE/SW H CD	D.59
1568251653	CLI C 1-3 GE/SW I CD	D.59
1568251655	CLI C 1-3 GE/SW J CD	D.59
1568251657	CLI C 1-3 GE/SW K CD	D.59
1568251659	CLI C 1-3 GE/SW L CD	D.59
1568251661	CLI C 1-3 GE/SW M CD	D.59
1568251663	CLI C 1-3 GE/SW N CD	D.59
1568251664	CLI C 1-3 BL/SW N CD	D.60
1568251665	CLI C 1-3 GE/SW O CD	D.59
1568251667	CLI C 1-3 GE/SW P CD	D.59
1568251669	CLI C 1-3 GE/SW Q CD	D.59
1568251671	CLI C 1-3 GE/SW R CD	D.59
1568251673	CLI C 1-3 GE/SW S CD	D.59
1568251676	CLI C 1-3 GE/SW T CD	D.59
1568251679	CLI C 1-3 GE/SW U CD	D.59
1568251681	CLI C 1-3 GE/SW V CD	D.59
1568251683	CLI C 1-3 GE/SW W CD	D.59
1568251686	CLI C 1-3 RT NE CD	D.48
1568251687	CLI C 1-3 GE/SW X CD	D.59
1568251688	CLI C 1-3 GN NE CD	D.48
1568251691	CLI C 1-3 GR NE CD	D.48
1568251693	CLI C 1-3 BL NE CD	D.48
1568251694	CLI C 1-3 SW NE CD	D.48
1568251696	CLI C 1-3 GE/SW Y CD	D.59
1568251698	CLI C 1-3 GE/SW Z CD	D.59
1568251699	CLI C 1-3 GE NE CD	D.48
1568251735	CLI C 1-3 GE/SW Æ CD	D.60
1568251736	CLI C 1-3 GE/SW Ø CD	D.60
1568251737	CLI C 1-3 RT/SW + CD	D.60
1568251738	CLI C 1-3 GE/SW + CD	D.60
1568251740	CLI C 1-3 GE/SW - CD	D.60
1568251741	CLI C 1-3 BL/SW - CD	D.60
1568251742	CLI C 1-3 GE/SW / CD	D.60
1568251746	CLI C 1-3 GE/SW ET CD	D.60
1568251747	CLI C 1-3 GE/SW PET. CD	D.60
1568251748	CLI C 1-3 GE/SW . CD	D.60
1568251750	CLI C 1-3 GE/SW : CD	D.60
1568251751	CLI C 1-3 GE/SW = CD	D.60
1568251752	CLI C 1-3 GE/SW AC CD	D.60
1568251753	CLI C 1-3 GE/SW * CD	D.60
1568251795	CLI C 1-3 GE/SW Ö CD	D.60
1568251797	CLI C 1-3 GE/SW Ä CD	D.60
1568251799	CLI C 1-3 GE/SW Å CD	D.60
1568259999	CLI C 1-3 SDR CD	D.49
1568261502	CLI C 2-4 GE/SW 0 CD	D.67
1568261503	CLI C 2-4 SW/WS 0 CD	D.67
1568261505	CLI C 2-4 GE/SW 1 CD	D.67
1568261506	CLI C 2-4 BR/WS 1 CD	D.67
1568261508	CLI C 2-4 GE/SW 2 CD	D.67
1568261509	CLI C 2-4 RT/SW 2 CD	D.67
1568261511	CLI C 2-4 GE/SW 3 CD	D.67
1568261512	CLI C 2-4 OR/SW 3 CD	D.67
1568261514	CLI C 2-4 GE/SW 4 CD	D.67
1568261514	CLI C 2-4 GE/SW 4 CD	D.67
1568261517	CLI C 2-4 GE/SW 5 CD	D.67
1568261518	CLI C 2-4 GN/SW 5 CD	D.67
1568261520	CLI C 2-4 GE/SW 6 CD	D.67
1568261521	CLI C 2-4 BL/SW 6 CD	D.67
1568261523	CLI C 2-4 GE/SW 7 CD	D.67
1568261524	CLI C 2-4 VI/SW 7 CD	D.67
1568261526	CLI C 2-4 GE/SW 8 CD	D.67
1568261527	CLI C 2-4 GR/SW 8 CD	D.67
1568261529	CLI C 2-4 GE/SW 9 CD	D.67
1568261530	CLI C 2-4 WS/SW 9 CD	D.67
1568261637	CLI C 2-4 GE/SW A CD	D.68
1568261639	CLI C 2-4 GE/SW B CD	D.68
1568261641	CLI C 2-4 GE/SW C CD	D.68
1568261643	CLI C 2-4 GE/SW D CD	D.68
1568261645	CLI C 2-4 GE/SW E CD	D.68
1568261647	CLI C 2-4 GE/SW F CD	D.68
1568261649	CLI C 2-4 GE/SW G CD	D.68
1568261651	CLI C 2-4 GE/SW H CD	D.68
1568261653	CLI C 2-4 GE/SW I CD	D.68
1568261655	CLI C 2-4 GE/SW J CD	D.68
1568261657	CLI C 2-4 GE/SW K CD	D.68
1568261659	CLI C 2-4 GE/SW L CD	D.68
1568261661	CLI C 2-4 GE/SW M CD	D.68
1568261663	CLI C 2-4 GE/SW N CD	D.68
1568261665	CLI C 2-4 GE/SW O CD	D.68
1568261667	CLI C 2-4 GE/SW P CD	D.68
1568261669	CLI C 2-4 GE/SW Q CD	D.68
1568261671	CLI C 2-4 GE/SW R CD	D.68
1568261673	CLI C 2-4 GE/SW S CD	D.68
1568261676	CLI C 2-4 GE/SW T CD	D.68
1568261679	CLI C 2-4 GE/SW U CD	D.68
1568261681	CLI C 2-4 GE/SW V CD	D.68
1568261683	CLI C 2-4 GE/SW W CD	D.68
1568261687	CLI C 2-4 GE/SW X CD	D.68
1568261695	CLI C 2-4 GE/SW Ö CD	D.68
1568261696	CLI C 2-4 GE/SW Y CD	D.68
1568261697	CLI C 2-4 GE/SW Ä CD	D.68
1568261698	CLI C 2-4 GE/SW Z CD	D.68
1568261699	CLI C 2-4 GE/SW Å CD	D.68
1568261735	CLI C 2-4 GE/SW Æ CD	D.68
1568261736	CLI C 2-4 GE/SW Ø CD	D.68
1568261737	CLI C 2-4 RT/SW + CD	D.68
1568261738	CLI C 2-4 GE/SW + CD	D.68
1568261740	CLI C 2-4 GE/SW - CD	D.68
1568261741	CLI C 2-4 BL/SW - CD	D.68
1568261742	CLI C 2-4 GE/SW / CD	D.68
1568261746	CLI C 2-4 GE/SW ET CD	D.68
1568261747	CLI C 2-4 GE/SW PET. CD	D.68
1568261748	CLI C 2-4 GE/SW . CD	D.68
1568261750	CLI C 2-4 GE/SW : CD	D.68
1568261751	CLI C 2-4 GE/SW = CD	D.68
1568261752	CLI C 2-4 GE/SW AC CD	D.68
1568269999	CLI C 2-4 SDR CD	D.50
1568300001	CLI M 2-4 GE NE CD	D.85
1568300002	CLI M 2-4 WS/SW 2 CD	D.89
1568300003	CLI M 2-4 WS/SW 3 CD	D.89
1568300004	CLI M 2-4 WS/SW 4 CD	D.89
1568300005	CLI M 2-4 WS/SW 5 CD	D.89
1568300006	CLI M 2-4 WS/SW 6 CD	D.89
1568300007	CLI M 2-4 WS/SW 7 CD	D.89
1568300008	CLI M 2-4 WS/SW 8 CD	D.89
1568301000	CLI M 2-4 WS/SW 0 CD	D.89
1568301502	CLI M 2-4 GE/SW 0 CD	D.89
1568301505	CLI M 2-4 GE/SW 1 CD	D.89
1568301506	CLI M 2-4 BR/WS 1 CD	D.88
1568301508	CLI M 2-4 GE/SW 2 CD	D.89
1568301509	CLI M 2-4 RT/SW 2 CD	D.88
1568301511	CLI M 2-4 GE/SW 3 CD	D.89
1568301512	CLI M 2-4 OR/SW 3 CD	D.88
1568301514	CLI M 2-4 GE/SW 4 CD	D.88
1568301514	CLI M 2-4 GE/SW 4 CD	D.89
1568301517	CLI M 2-4 GE/SW 5 CD	D.89
1568301518	CLI M 2-4 GN/SW 5 CD	D.88
1568301520	CLI M 2-4 GE/SW 6 CD	D.89
1568301521	CLI M 2-4 BL/SW 6 CD	D.88
1568301523	CLI M 2-4 GE/SW 7 CD	D.89
1568301524	CLI M 2-4 VI/SW 7 CD	D.88
1568301526	CLI M 2-4 GE/SW 8 CD	D.89
1568301527	CLI M 2-4 GR/SW 8 CD	D.88
1568301529	CLI M 2-4 GE/SW 9 CD	D.89
1568301530	CLI M 2-4 WS/SW 9 CD	D.88

Order No.	Type	Page
1568301530	CLI M 2-4 WS/SW 9 CD	D.89
1568301637	CLI M 2-4 GE/SW A CD	D.89
1568301639	CLI M 2-4 GE/SW B CD	D.89
1568301641	CLI M 2-4 GE/SW C CD	D.89
1568301643	CLI M 2-4 GE/SW D CD	D.89
1568301645	CLI M 2-4 GE/SW E CD	D.89
1568301647	CLI M 2-4 GE/SW F CD	D.89
1568301649	CLI M 2-4 GE/SW G CD	D.89
1568301651	CLI M 2-4 GE/SW H CD	D.89
1568301653	CLI M 2-4 GE/SW I CD	D.89
1568301655	CLI M 2-4 GE/SW J CD	D.89
1568301657	CLI M 2-4 GE/SW K CD	D.89
1568301659	CLI M 2-4 GE/SW L CD	D.89
1568301661	CLI M 2-4 GE/SW M CD	D.89
1568301663	CLI M 2-4 GE/SW N CD	D.89
1568301665	CLI M 2-4 GE/SW O CD	D.89
1568301667	CLI M 2-4 GE/SW P CD	D.89
1568301669	CLI M 2-4 GE/SW Q CD	D.89
1568301671	CLI M 2-4 GE/SW R CD	D.89
1568301673	CLI M 2-4 GE/SW S CD	D.89
1568301676	CLI M 2-4 GE/SW T CD	D.89
1568301679	CLI M 2-4 GE/SW U CD	D.89
1568301681	CLI M 2-4 GE/SW V CD	D.89
1568301683	CLI M 2-4 GE/SW W CD	D.89
1568301687	CLI M 2-4 GE/SW X CD	D.89
1568301694	CLI M 2-4 GE/SW Ä CD	D.88
1568301695	CLI M 2-4 GE/SW Ö CD	D.88
1568301696	CLI M 2-4 GE/SW Y CD	D.89
1568301697	CLI M 2-4 WS/SW 1 CD	D.89
1568301698	CLI M 2-4 GE/SW Z CD	D.89
1568301699	CLI M 2-4 GE/SW Å CD	D.88
1568301735	CLI M 2-4 GE/SW Æ CD	D.88
1568301736	CLI M 2-4 GE/SW Ø CD	D.88
1568301738	CLI M 2-4 GE/SW + CD	D.88
1568301740	CLI M 2-4 GE/SW - CD	D.88
1568301741	CLI M 2-4 BL/SW - CD	D.88
1568301742	CLI M 2-4 GE/SW / CD	D.88
1568301746	CLI M 2-4 GE/SW ET CD	D.88
1568301747	CLI M 2-4 GE/SW PET. CD	D.88
1568301748	CLI M 2-4 GE/SW . CD	D.88
1568301750	CLI M 2-4 GE/SW : CD	D.88
1568301751	CLI M 2-4 GE/SW = CD	D.88
1568301752	CLI M 2-4 GE/SW AC CD	D.88
1568309999	CLI M 2-4 SDR CD	D.86

1570000000

Order No.	Type	Page
1579500000	CLI M 2-25Ω SDR SG	D.85

1600000000

Order No.	Type	Page
1600740000	CLI F 1-20 WS/GE	D.16
1603290000	LOGIMARK-KARTENHALTER	E.41
1607710000	ESO 5 DIN A4 WS	C.88
1607710000	ESO 5 DIN A4 WS	D.22
1607720000	ESO 7 DIN A4 WS	C.86
1607720000	ESO 7 DIN A4 WS	C.86
1607720000	ESO 7 DIN A4 WS	C.89
1607720000	ESO 7 DIN A4 WS	D.21
1609801044	DEK 5/5 MC NE WS	C.14
1609801044	DEK 5/5 MC NE WS	C.87
1609801044	DEK 5/5 MC NE WS	C.89
1609801044	DEK 5/5 MC NE WS	E.46
1609801686	DEK 5/5 MC NE RT	C.14
1609801687	DEK 5/5 MC NE GE	C.14
1609801688	DEK 5/5 MC NE GN	C.14
1609801691	DEK 5/5 MC NE GR	C.14
1609801693	DEK 5/5 MC NE BL	C.14
1609810000	DEK 5/5 MC SDR	C.14
1609810000	DEK 5/5 MC SDR	C.86
1609820000	DEK 5/6 MC NE WS	C.15
1609830000	DEK 5/6 MC SDR	C.15
1609840000	DEK 5/6.5 MC NE WS	C.16
1609850000	DEK 5/6.5 MC SDR	C.16
1609860000	WS 12/5 MC NE WS	C.25
1609860000	WS 12/5 MC NE WS	C.86
1609860000	WS 12/5 MC NE WS	C.87
1609870000	WS 12/5 MC SDR	C.25
1609880000	WS 15/5 MC NE WS	C.26
1609890000	WS 15/5 MC SDR	C.26
1609900000	WS 12/6 MC NE WS	C.29
1609910000	WS 12/6 MC SDR	C.29
1609920000	WS 12/6.5 MC NE WS	C.30
1609930000	WS 12/6.5 MC SDR	C.30
1609940000	ESG 9/20 MC NE WS	E.20
1609950000	ESG 9/20 MC SDR	E.20
1609981044	TM-I 15 MC NE WS	D.13
1609981686	TM-I 15 MC NE RT	D.13
1609981687	TM-I 15 MC NE GE	D.13
1609981693	TM-I 15 MC NE BL	D.13
1609990000	TM-I 15 MC SDR	D.13

1610000000

Order No.	Type	Page
1610000000	ZS 10/5 MC NE WS	C.37
1610010000	ZS 10/5 MC SDR	C.37
1610020000	ZS 12/6 MC NE WS	C.38
1610030000	ZS 12/6 MC SDR	C.38
1610700000	WKM 18/43	C.92
1610700000	WKM 18/43	D.19
1610700000	WKM 18/43	D.22
1611930000	ZGB 30	C.86

1620000000

Order No.	Type	Page
1629900000	KSW 2.5 < 50MM SDR	E.73
1629910000	KSW 4 < 50MM SDR	E.73
1629920000	KSW 2,5 < 100MM SONDDR.	E.73
1629930000	KSW 4 < 100MM SDR	E.73
1629940000	KSW 2,5 < 150MM SONDDR.	E.73
1629950000	KSW 4 < 150MM SONDDR.	E.73

1630000000

Order No.	Type	Page
1630100001	KSW 2,5 8/5,08 1-8	E.73
1630100009	KSW 2,5 8/5,08 9-16	E.73
1630150001	KSW 4 16/3,5 1-16	E.73
1630160001	KSW 4 16/5,08 1-16	E.73
1630160017	KSW 4 16/5,08 17-32	E.73
1630180001	KSW 4 24/5,08 1-24	E.73
1630200001	KSW 4 8/5,08 1-8	E.73
1631350000	ESO 5 DIN A4 GE	C.88
1631350000	ESO 5 DIN A4 GE	D.22
1631640001	LOGIM.-KH. ES SCHWARZ	E.41
1631640002	LOGIM.-KH. ES GRAU	E.41
1631640003	LOGIM.-KH. ES DUNKELBEIGE	E.41
1631910000	WKM 8/30	C.91
1631910000	WKM 8/30	D.19
1631910000	WKM 8/30	D.21
1631920000	ESO 5 S DIN A4 WS	C.88
1631930000	SCHT 5 S	C.88
1631930000	SCHT 5 S	C.91
1631940000	STR 5 S F.SCHT 5 S	C.88
1634780000	ESO 7 DIN A4 GE	C.86
1634780000	ESO 7 DIN A4 GE	C.86
1634780000	ESO 7 DIN A4 GE	C.89
1634780000	ESO 7 DIN A4 GE	D.21
1634790000	CLI M 2-40Ω SDR SG	D.85
1635000000	WS 10/5 MC NE WS	C.23
1635010000	WS 10/5 MC SDR	C.23
1636530000	ZGB 15	C.86

1640000000

Order No.	Type	Page
1640740000	WS 8/5 MC NE WS	C.22
1640740000	WS 8/5 MC NE WS	E.46
1640750000	WS 8/5 MC SDR	C.22
1646630000	ZS 15/5 MC NE WS	C.37
1646640000	ZS 15/5 MC SDR	C.37

1650000000

Order No.	Type	Page
1652220000	ESG 8/19 MC NE WS	E.17
1652230000	ESG 8/19 MC SDR	E.17
1652250001	KSW 2,5 24/3,5 1-24	E.73
1653340001	DEK 8 FW 1-50 TAMPOPR.	C.11
1653340051	DEK 8 FW 51-100 TAMPOP.	C.11
1653350001	DEK 8 FS 1-50 TAMPOPR.	C.11

1670000000

Order No.	Type	Page
1670370000	ESO 5 P DIN A4 WS	C.88
1670370000	ESO 5 P DIN A4 WS	D.22
1670380000	ESO 5 P DIN A4 GE	C.88
1670380000	ESO 5 P DIN A4 GE	D.22
1670390000	ESO 7 P DIN A4 WS	C.86
1670390000	ESO 7 P DIN A4 WS	C.86
1670390000	ESO 7 P DIN A4 WS	C.89
1670390000	ESO 7 P DIN A4 WS	D.21
1670400000	ESO 7 P DIN A4 GE	C.86
1670400000	ESO 7 P DIN A4 GE	C.86
1670400000	ESO 7 P DIN A4 GE	C.89
1670400000	ESO 7 P DIN A4 GE	D.21
1674740000	ESG 8/17 MC NE WS	E.15
1674750000	ESG 8/17 MC SDR	E.15
1674760000	ESG 9/17 K MC NE WS	D.16
1674760000	ESG 9/17 K MC NE WS	E.19
1674770000	ESG 9/17 K MC SDR	E.19
1675130001	LOGIMARKHALTER 1/2 SW	E.41
1675130002	LOGIMARKHALTER 1/2 GRAU	E.41
1677140000	MF 8/5 MC NE WS	C.44
1677150000	MF 8/5 MC SDR	C.44
1677160000	MF 10/5 MC NE WS	C.44
1677170000	MF 10/5 MC SDR	C.44
1677180000	MF 12/5 MC NE WS	C.45
1677190000	MF 12/5 MC SDR	C.45
1677220000	MF 10/6 MC NE WS	C.47
1677230000	MF 10/6 MC SDR	C.47

1680000000

Order No.	Type	Page
1680411044	TM-I 20 MC NE WS	D.13
1680411686	TM-I 20 MC NE RT	D.13
1680411687	TM-I 20 MC NE GE	D.13
1680411693	TM-I 20 MC NE BL	D.13
1680420000	TM-I 20 MC SDR	D.13
1686110000	TABPACK 14X9	E.70
1686120000	TABPACK 15X6	E.70
1686130000	TABPACK 19X11 M. RAND	E.70
1686140000	TABPACK 21X8	E.70
1686160000	PAGETAB 15/9	E.71
1686170000	PAGETAB 19/11	E.71
1686180000	PAGETAB 20/8	E.71
1686190000	PAGETAB 28/11	E.71
1686200000	PAGETAB 38/11	E.71
1686210000	PAGETAB 56/22	E.71
1686220000	PAGETAB 60/35	E.71
1686360001	LM MT300 15/6 SI	E.69
1686361044	LM MT300 15/6 WS	E.69
1686361687	LM MT300 15/6 GE	E.69
1686380001	LM MT300 20/8 SI	E.69
1686381044	LM MT300 20/8 WS	E.69
1686381687	LM MT300 20/8 GE	E.69
1686390001	LM MT300 25.4/12.7 SI	E.69
1686391044	LM MT300 25.4/12.7 WS	E.69
1686391687	LM MT300 25.4/12.7 GE	E.69
1686400001	LM MT300 26/10 SI	E.69
1686401044	LM MT300 26/10 WS	E.69
1686401687	LM MT300 26/10 GE	E.69
1686420001	LM MT300 56/22 SI	E.69
1686421044	LM MT300 56/22 WS	E.69
1686421687	LM MT300 56/22 GE	E.69
1686430001	LM MT300 60/36 SI	E.69
1686431044	LM MT300 60/36 WS	E.69
1686431687	LM MT300 60/36 GE	E.69
1686440001	LM MT300 210/297 SI	E.69
1686441044	LM MT300 210/297 WS	E.69
1686441687	LM MT300 210/297 GE	E.69
1689490001	VT SFX 14/23 MC NE WS V0	D.9
1689490004	VT SFX 14/23 MC NE GE V0	D.9

1690000000

Order No.	Type	Page
1692270000	MF-WO 12/5 MC NE WS	C.59
1692280000	MF-WO 12/5 MC SDR	C.59
1692290000	MF-WO 12/6 MC NE WS	C.60
1692300000	MF-WO 12/6 MC SDR	C.60
1695711044	LM WO 18/34 WS	D.41
1695711687	LM WO 18/34 GE	D.41
1695721044	LM WO 23/55 WS	D.41
1695721687	LM WO 23/55 GE	D.41
1695731044	LM WO 25/68 WS	D.41
1695731687	LM WO 25/68 GE	D.41
1695741044	LM WO 36/93 WS	D.41
1695741687	LM WO 36/93 GE	D.41
1697890000	CB 98/2.5 BLACK	D.98
1697900000	CB 140/3.5 BLACK	D.98
1697910000	CB 200/4.8 BLACK	D.98
1697920000	CB 290/4.5 BLACK	D.98
1697930000	CB 360/4.5 BLACK	D.98
1697940000	CB 365/7.5 BLACK	D.98
1697950000	CBH 19/19 BLACK	D.99
1697960000	CBH 27/27 SW	D.99
1699800000	SCT 4 ,6/127 C	D.97
1699810000	SCT 4.6/201 C	D.97
1699820000	SM 27/8 MC NE WS	E.28
1699830000	SM 27/8 MC SDR	E.28
1699840000	SM 27/12.5 MC NE WS	E.29
1699850000	SM 27/12.5 SDR	E.29
1699860000	SM 27/18 MC NE WS	E.29
1699870000	SM 27/18 MC SDR	E.29
1699880000	SM 27/12.5 K MC NE WS	E.29
1699890000	SM 27/12.5 K MC SDR	E.29
1699900000	SCT 4,6/266C	D.97
1699910000	SCT 4,6/360 C	D.97
1699920000	SCT 4,6/520	D.97
1699930000	SCT 4,6/679	D.97
1699940000	SCT 4,6/838	D.97

1700000000

Order No.	Type	Page
1700530001	MARKO-C. 25X25X25 B/DR.	E.71
1700540001	MARKO-C. 50X50X50 B/DR.	E.71
1700550001	MARKO-C.100X100X100 B/DR	E.71
1700560001	MARKO-C.200X200X200 B/DR	E.71
1705820001	KSW 4 10/5,08 W 1-10	E.73
1707270000	SM 27/18 K MC NE WS	E.29
1707280000	SM 27/18 K MC SDR	E.29
1707350001	SERV-P. DIAM16 L1 SW/WS	E.71
1707350002	SERV-P. DIAM16 L2 SW/WS	E.71
1707350003	SERV-P. DIAM16 L3 SW/WS	E.71
1707350004	SERV-P. DIAM16 N BL/WS	E.71
1707350005	SERV-P.DIAM16ERDE GE/GN	E.71
1707350006	SERV-P. DIAM16 PE GE/GN	E.71

1710000000

Order No.	Type	Page
1712491044	LM WO 25/140 WS	D.41
1712491687	LM WO 25/140 GE	D.41
1712500001	WSM 10 1	D.95
1712500002	WSM 10 2	D.95
1712500003	WSM 10 3	D.95
1712500004	WSM 10 4	D.95
1712500005	WSM 10 5	D.95
1712500006	WSM 10 6	D.95
1712500007	WSM 10 7	D.95
1712500008	WSM 10 8	D.95
1712500009	WSM 10 9	D.95
1712501000	WSM 10 0	D.95
1712501053	WSM 10 ERDE	D.95
1712501054	WSM 10 Ä	D.95
1712501055	WSM 10 Ö	D.95
1712501056	WSM 10 ~	D.95
1712501637	WSM 10 A	D.95
1712501639	WSM 10 B	D.95
1712501641	WSM 10 C	D.95
1712501643	WSM 10 D	D.95
1712501645	WSM 10 E	D.95
1712501647	WSM 10 F	D.95
1712501649	WSM 10 G	D.95
1712501651	WSM 10 H	D.95
1712501653	WSM 10 I	D.95
1712501655	WSM 10 J	D.95
1712501657	WSM 10 K	D.95
1712501659	WSM 10 L	D.95
1712501661	WSM 10 M	D.95
1712501663	WSM 10 N	D.95
1712501665	WSM 10 O	D.95
1712501667	WSM 10 P	D.95
1712501669	WSM 10 Q	D.95
1712501670	WSM 10 Ø	D.95
1712501671	WSM 10 R	D.95
1712501672	WSM 10 Æ	D.95
1712501673	WSM 10 S	D.95
1712501676	WSM 10 T	D.95
1712501679	WSM 10 U	D.95
1712501681	WSM 10 V	D.95
1712501683	WSM 10 W	D.95
1712501687	WSM 10 X	D.95
1712501696	WSM 10 Y	D.95
1712501698	WSM 10 Z	D.95
1712501699	WSM 10 Ü	D.95
1712501700	WSM 10 Å	D.95
1712501738	WSM 10 +	D.95
1712501739	WSM 10 /	D.95
1712501740	WSM 10 -	D.95
1712501741	WSM 10 :	D.95
1712501742	WSM 10 =	D.95
1712501743	WSM 10 .	D.95
1712501744	WSM 10 (	D.95
1713680000	SM 27/8 MC NE SI	E.28
1713690000	SM 27/8 K SONDERDRUCK	E.28
1713700000	SM 27/12.5 MC NE SI	E.29
1713720000	SM 27/12.5 K MC NE SI	E.29
1713740000	SM 27/18 MC NE SI	E.29
1713760000	SM 27/18 K MC NE SI	E.29
1716630000	SM-H 27/18 SW	E.29
1716630000	SM-H 27/18 SW	E.29
1716640000	SM-H 27/12.5 SW	E.29
1716640000	SM-H 27/12.5 SW	E.29
1716800000	MF-WO 5/5 MC NE WS	C.58
1716810000	MF-WO 5/5 MC SDR	C.58
1716820000	MF-WO 9/6 MC NE WS	C.59
1716830000	MF-WO 9/6 MC SDR	C.59
1716840000	MF-WO 9/5 MC NE WS	C.58
1716850000	MF-WO 9/5 MC SDR	C.58
1718411044	TM-I 12 MC NE WS	D.13
1718411686	TM-I 12 MC NE RT	D.13
1718411687	TM-I 12 MC NE GE	D.13
1718411693	TM-I 12 MC NE BL	D.13
1718420000	TM-I 12 MC SDR	D.13
1718431044	TM-I 18 MC NE WS	D.13
1718431044	TM-I 18 MC NE WS	D.16
1718431686	TM-I 18 MC NE RT	D.13
1718431687	TM-I 18 MC NE GE	D.13
1718431693	TM-I 18 MC NE BL	D.13
1718440000	TM-I 18 MC SDR	D.13
1719760000	TM 0/12 HF/HB	D.15
1719770000	TM 0/18 HF/HB	D.15
1719780000	TM 1/12 HF/HB	D.15
1719790000	TM 1/18 HF/HB	D.15
1719800000	TM 2/12 HF/HB	D.15
1719810000	TM 2/18 HF/HB	D.15
1719820000	TM 3/12 HF/HB	D.15
1719830000	TM 3/18 HF/HB	D.15
1719840000	TM 4/12 HF/HB	D.15
1719850000	TM 4/18 HF/HB	D.15
1719860000	TM 5/12 HF/HB	D.15
1719870000	TM 5/18 HF/HB	D.15
1719880000	TM 6/12 HF/HB	D.15
1719890000	TM 6/18 HF/HB	D.15

1720000000

Order No.	Type	Page
1720570000	ETO SM 27/8	E.28
1720580000	ETO SM 27/12,5	E.29
1720590002	ETO SM 27/18 TRANSPAR.	E.29
1720600000	SCHS2 K	E.16
1720610000	ESG 8/17 SCHS MC NE WS	E.16
1720620000	DEK 5/7.5 MC NE WS	C.17
1720630000	CB 200/3.5 NATUR	D.98
1720640000	CB 290/3.5 NATUR	D.98
1720650000	CB 290/3.5 BLACK	D.98
1720660000	CB 200/3.5 BLACK	D.98
1720670000	CB 750/7.5 BLACK	D.98
1720680000	CB 750/7.5 NATUR	D.98

Order No.	Type	Page
1723540000	CB 160/4.5 NATUR	D.98
1723550000	CB 178/4.8 NATUR	D.98
1723560000	CB 160/4.5 BLACK	D.98
1723570000	CB 178/4.8 BLACK	D.98
1724140001	LM MT300 15/4.6 SI	E.69
1724141044	LM MT300 15/4.6 WS	E.69
1724141687	LM MT300 15/4.6 GE	E.69
1724150001	LM MT300 17/9 SI	E.69
1724151044	LM MT300 17/9 WS	E.69
1724151687	LM MT300 17/9 GE	E.69
1724160001	LM MT300 30/20 SI	E.69
1724161044	LM MT300 30/20 WS	E.69
1724161687	LM MT300 30/20 GE	E.69
1724170001	LM MT300 105/148 SI	E.69
1724171044	LM MT300 105/148 WS	E.69
1724180001	LM MT300 210/148 SI	E.69
1724181687	LM MT300 210/148 GE	E.69
1724760000	ESG 9/17 MC NE WS	E.19
1724790000	TMC 9/20	E.21
1727740001	VT SFX 9/24 MC NE WS V0	D.9
1727740004	VT SFX 9/24 MC NE GE V0	D.9
1727770001	VT SFX 10/23 MC NE WS V0	D.9
1727770004	VT SFX 10/23 MC NE GE V0	D.9

1730000000

1733650004	CLI M 2-4 GE NE MP	D.85
1733651502	CLI M 2-4 GE/SW 0 MP	D.87
1733651503	CLI M 2-4 SW/WS 0 MP	D.86
1733651505	CLI M 2-4 GE/SW 1 MP	D.87
1733651506	CLI M 2-4 BR/WS 1 MP	D.86
1733651508	CLI M 2-4 GE/SW 2 MP	D.87
1733651509	CLI M 2-4 RT/SW 2 MP	D.86
1733651511	CLI M 2-4 GE/SW 3 MP	D.87
1733651512	CLI M 2-4 OR/SW 3 MP	D.86
1733651514	CLI M 2-4 GE/SW 4 MP	D.86
1733651514	CLI M 2-4 GE/SW 4 MP	D.87
1733651517	CLI M 2-4 GE/SW 5 MP	D.87
1733651518	CLI M 2-4 GN/SW 5 MP	D.86
1733651520	CLI M 2-4 GE/SW 6 MP	D.87
1733651521	CLI M 2-4 BL/SW 6 MP	D.86
1733651523	CLI M 2-4 GE/SW 7 MP	D.87
1733651524	CLI M 2-4 VI/SW 7 MP	D.86
1733651526	CLI M 2-4 GE/SW 8 MP	D.87
1733651527	CLI M 2-4 GR/SW 8 MP	D.86
1733651529	CLI M 2-4 GE/SW 9 MP	D.87
1733651530	CLI M 2-4 WS/SW 9 MP	D.86
1733651637	CLI M 2-4 GE/SW A MP	D.87
1733651639	CLI M 2-4 GE/SW B MP	D.87
1733651641	CLI M 2-4 GE/SW C MP	D.87
1733651643	CLI M 2-4 GE/SW D MP	D.87
1733651645	CLI M 2-4 GE/SW E MP	D.87
1733651647	CLI M 2-4 GE/SW F MP	D.87
1733651649	CLI M 2-4 GE/SW G MP	D.87
1733651651	CLI M 2-4 GE/SW H MP	D.87
1733651653	CLI M 2-4 GE/SW I MP	D.87
1733651655	CLI M 2-4 GE/SW J MP	D.87
1733651657	CLI M 2-4 GE/SW K MP	D.87
1733651659	CLI M 2-4 GE/SW L MP	D.87
1733651661	CLI M 2-4 GE/SW M MP	D.87
1733651663	CLI M 2-4 GE/SW N MP	D.87
1733651665	CLI M 2-4 GE/SW O MP	D.87
1733651667	CLI M 2-4 GE/SW P MP	D.87
1733651669	CLI M 2-4 GE/SW Q MP	D.87
1733651671	CLI M 2-4 GE/SW R MP	D.87
1733651673	CLI M 2-4 GE/SW S MP	D.87
1733651676	CLI M 2-4 GE/SW T MP	D.87
1733651679	CLI M 2-4 GE/SW U MP	D.87
1733651681	CLI M 2-4 GE/SW V MP	D.87
1733651683	CLI M 2-4 GE/SW W MP	D.87
1733651687	CLI M 2-4 GE/SW X MP	D.87
1733651695	CLI M 2-4 GE/SW Ö MP	D.86
1733651696	CLI M 2-4 GE/SW Y MP	D.87
1733651697	CLI M 2-4 GE/SW Å MP	D.86
1733651698	CLI M 2-4 GE/SW Z MP	D.87
1733651699	CLI M 2-4 GE/SW Å MP	D.86
1733651738	CLI M 2-4 GE/SW + MP	D.86
1733651740	CLI M 2-4 GE/SW - MP	D.86
1733651742	CLI M 2-4 GE/SW / MP	D.86
1733651746	CLI M 2-4 GE/SW ET MP	D.86
1733651747	CLI M 2-4 GE/SW PET. MP	D.86
1733651748	CLI M 2-4 GE/SW . MP	D.86
1733651750	CLI M 2-4 GE/SW : MP	D.86
1733651751	CLI M 2-4 GE/SW = MP	D.86
1733651752	CLI M 2-4 GE/SW AC MP	D.86
1736181044	ESG 7/20 SIRIUS MC NE WS	D.21
1736181044	ESG 7/20 SIRIUS MC NE WS	D.21
1736181044	ESG 7/20 SIRIUS MC NE WS	E.13
1736181687	ESG 7/20 SIRIUS MC NE GE	D.21
1736181687	ESG 7/20 SIRIUS MC NE GE	E.13
1736181687	ESG 7/20 SIRIUS MC NE GE	E.46
1736181696	ESG 7/20 SIRIUS MC NE TU	D.21
1736181696	ESG 7/20 SIRIUS MC NE TU	E.13
1736190000	ESG 8/10 ASI MC NE WS	E.13

1740000000

1741090000	SYMBOL-P. 25X25X25 B/DR	E.71
1741100000	SYMBOL-P. 50X50X50 B/DR	E.71
1741110000	SYMBOL-P. 75X75X75 B/DR	E.71
1747320001	SFC 1/12 MC NE WS	D.11
1747320002	SFC 1/12 MC NE BL	D.11
1747320003	SFC 1/12 MC NE RT	D.11
1747320004	SFC 1/12 MC NE GE	D.11
1748820000	TMX 18 HF/HB	D.15
1749320001	LM MT300 18/6.5 SI	E.69
1749321044	LM MT300 18/6.5 WS	E.69
1749321687	LM MT300 18/6.5 GE	E.69

1750000000

1751561044	THM WO 25/140 WS	D.41
1751561687	THM WO 25/140 GE	D.41
1751750001	THM MT30X 25/12 SI	E.66
1751751044	THM MT30X 25/12 WS	E.66
1751751687	THM MT30X 25/12 GE	E.66
1751761044	THM MT30X 26/10 WS	E.66
1751810001	THM MT30X 45/23 SI	E.66
1751811044	THM MT30X 45/23 WS	E.66
1751811687	THM MT30X 45/23 GE	E.66
1751820001	THM MT30X 101/48 SI	E.66
1751821044	THM MT30X 101/48 WS	E.66
1751821687	THM MT30X 101/48 GE	E.66
1751830001	THM MT30X 65/35 SI	E.66
1751831044	THM MT30X 65/35 WS	E.66
1751831687	THM MT30X 65/35 GE	E.66
1752720000	SFC 1/12 MC SDR	D.11
1753230001	THM MT30X 15/6 SI	E.66
1753231044	THM MT30X 15/6 WS	E.66
1753231687	THM MT30X 15/6 GE	E.66
1753241044	THM MT30X 20/8 WS	E.66
1753241687	THM MT30X 20/8 GE	E.66
1753250001	THM MT30X 18/9 SI	E.66
1753251044	THM MT30X 18/9 WS	E.66
1753251687	THM MT30X 18/9 GE	E.66
1753261687	THM MT30X 30/20 GE	E.66
1753270001	THM MT30X 18/6 SI	E.66
1753271044	THM MT30X 18/6 WS	E.66
1753271687	THM MT30X 18/6 GE	E.66
1753460000	SCHS4 K	E.13
1753460000	SCHS4 K	E.46
1753480000	SCHS3 K	E.13
1753480000	SCHS3 K	E.46
1753490000	WKM 8/20	D.21
1753500000	ESG 9/17 K MC NE GE	E.19
1755270000	DEK 5/3.5 MC NE WS	C.13
1755340000	ESG 8/17 SYS PRO M WS	E.16
1755340000	ESG 8/17 SYS PRO M WS	E.46
1755350000	ESG 8/17 SYS PRO M SDR	E.16
1758320001	SFC 2/12 MC NE WS	D.11
1758320002	SFC 2/12 MC NE BL	D.11
1758320003	SFC 2/12 MC NE RT	D.11
1758320004	SFC 2/12 MC NE GE	D.11
1759871044	LM WO 15/70 WS	D.41

1760000000

1760461044	LM MT300 40/6 WS	E.69
1762320001	DEK 5/3,5 MC FSZ 1-10	C.11
1762320011	DEK 5/3,5 MC FSZ 11-20	C.11
1762320021	DEK 5/3,5 MC FSZ 21-30	C.11
1762320031	DEK 5/3,5 MC FSZ 31-40	C.11
1762320041	DEK 5/3,5 MC FSZ 41-50	C.11
1762320051	DEK 5/3,5 MC FSZ 51-60	C.11
1762320061	DEK 5/3,5 MC FSZ 61-70	C.11
1762320071	DEK 5/3,5 MC FSZ 71-80	C.11
1762320081	DEK 5/3,5 MC FSZ 81-90	C.11
1762320091	DEK 5/3,5 MC FSZ 91-100	C.11
1762320101	DEK 5/3,5 MC FSZ 101-110	C.11
1762320111	DEK 5/3,5 MC FSZ 111-120	C.11
1762320121	DEK 5/3,5 MC FSZ 121-130	C.11
1762440000	ADAPTER ALU STI-S	F.11
1762440000	ADAPTER ALU STI-S	F.13
1762960001	THM MT30X 101/74 SI	E.66
1763270000	CLI TM 10-33	D.16
1763280000	CLI TM 20-33	D.16
1763290000	CLI CD-BOX	D.93
1763390000	CLI TM 20-66	D.16
1763480000	SFC 2/12 MC SDR	D.11
1764050000	CLI F 2-17.5 WS/GE	D.16
1764060000	CLI T 02-12	D.16
1764070000	CLI T 02-15	D.16
1764140000	CLI T 02-18	D.16
1764150000	CLI T 02-20	D.16
1764190000	CLI T 1-12	D.16
1764200000	CLI T 1-15	D.16
1764210000	CLI T 1-18	D.16
1764220000	CLI T 1-20	D.16
1764230000	CLI T 2-12	D.16
1764240000	CLI T 2-15	D.16
1764250000	CLI T 2-18	D.16
1764260000	CLI T 2-20	D.16
1764270000	CLI T 3-12	D.16
1764280000	CLI T 3-15	D.16
1764290000	CLI T 3-18	D.16
1764300000	CLI T 3-20	D.16
1766160000	ESG 9/20 MC NE GE	E.20
1766640000	ESG 8/17 SCHS MC SDR	E.16
1766650000	ESG 7/20 SIRIUS SDR	E.13
1767730000	DEK 5/3.5 MC SDR	C.13
1768090000	WS 14/5 MC NE WS	C.26
1768380000	LM WO 25.4/57 WS	D.41
1768390000	LM WO 25.4/57 GE	D.41
1768400000	LM WO 25.4/95 WS	D.41
1768430000	LM WO 37/25 GE	D.41
1768540000	Plotterpen 0,25	F.11
1768540000	Plotterpen 0,25	F.13
1768550000	Plotterpen 0,35	F.11
1768550000	Plotterpen 0,35	F.13
1768560000	Plotterpen 0,5	F.11
1768560000	Plotterpen 0,5	F.13
1768570000	Plotterpen 0,18	F.11
1768570000	Plotterpen 0,18	F.13

1770000000

1770080000	SF-Tool-Sortiment	D.7
1770470000	ESG 8/10 ASI MC SDR	E.13
1770480000	ESG 9/17 MC SDR	E.19
1770490000	DEK 5/7.5 MC SDR	C.17
1770500000	ESG 9/20 O.F MC NE WS	E.21
1770510000	ESG 9/20 O.F MC SDR	E.21
1771930000	SM 27/8 K MC NE SI	E.28
1772120000	Tinte 2000 25ml	F.11
1772120000	Tinte 2000 25ml	F.13
1772130000	Reiniger 2000 25ml	F.11
1772130000	Reiniger 2000 25ml	F.13
1773220000	SM 27/27 MC NE WS	E.30
1773230000	SM 27/27 MC NE SI	E.30
1773240000	SM 27/27 MC SDR	E.30
1773521686	WS 8/5 MC NE RT	C.22
1773521687	WS 8/5 MC NE GE	C.22
1773521690	WS 8/5 MC NE OR	C.22
1773521693	WS 8/5 MC NE BL	C.22
1773531686	WS 10/5 MC NE RT	C.23
1773531687	WS 10/5 MC NE GE	C.23
1773531693	WS 10/5 MC NE BL	C.23
1773541686	WS 12/5 MC NE RT	C.25
1773541687	WS 12/5 MC NE GE	C.25
1773541690	WS 12/5 MC NE OR	C.25
1773541693	WS 12/5 MC NE BL	C.25
1773551686	WS 12/6 MC NE RT	C.29
1773551687	WS 12/6 MC NE GE	C.29
1773551689	WS 12/6 MC NE VI	C.29
1773551690	WS 12/6 MC NE OR	C.29
1773551692	WS 12/6 MC NE BR	C.29
1773551693	WS 12/6 MC NE BL	C.29
1773561686	WS 12/6.5 MC NE RT	C.30
1773561687	WS 12/6.5 MC NE GE	C.30
1773561693	WS 12/6.5 MC NE BL	C.30
1773571687	WS 15/5 MC NE GE	C.26
1773880000	LM WO 15/140 WS	D.41
1774340000	THM WO 25/76 GE	D.41
1774350000	THM WO 25/76 WS	D.41
1774380000	THM WO 17.8/34 WS	D.41
1774400000	THM WO 33.5/93.1 WS	D.41
1774410000	THM WO 33.5/93.1 GE	D.41
1774470000	WSM TOOL AUTOMATIK	D.98
1774470000	WSM TOOL AUTOMATIK	D.99
1774480000	WSM TOOL MANUELL	D.98
1774480000	WSM TOOL MANUELL	D.99
1774490000	WSMH 288mm	D.96
1774500000	WSMH 48mm	D.96
1774510000	WSMH 60mm	D.96
1774520000	WSMH 84mm	D.96
1774530000	WSMH 108mm	D.96
1775910000	ESG 9/10 MC NE WS	E.17
1778170000	THM MT30x 101/150 SI/G	E.66
1778270000	WS 12/3.5 MC NE WS	C.21
1778280000	WS 12/3.5 MC SDR	C.21
1779080001	SFC 1/21 MC NE WS	D.11
1779080002	SFC 1/21 MC NE BL	D.11
1779080003	SFC 1/21 MC NE RT	D.11
1779080004	SFC 1/21 MC NE GE	D.11
1779090000	SFC 1/21 MC SDR	D.11

1780000000

1782710000	SM-H 27/27 SW	E.30
1782710000	SM-H 27/27 SW	E.30
1782960000	SF-TOOL 2-3	D.7
1782970000	SF-TOOL 1	D.7
1782980000	SF-TOOL 4-5	D.7
1782990000	SM 27/27 K MC NE SI	E.30
1783000000	SM 27/27 K MC NE WS	E.30
1783010000	SM 27/27 K MC SDR	E.30

1790000000

1790150000	CC-RAIL 1000	E.45
1790160000	CC-RAIL TRANSPARENT1000	E.45
1790410000	CC-H 15/27	E.37
1790420000	CC-H 15/49	E.38
1790430000	CC-H 15/17	E.37
1792000000	WS 10/5 M MC NE WS	C.24
1792000000	WS 10/5 M MC NE WS	C.87
1792000000	WS 10/5 M MC NE WS	C.89
1792010000	WS 10/5 MC M SDR	C.24
1798470000	TM 203/20 V0	D.17
1798480000	TM 203/18 V0	D.17
1798490000	TM 203/15 V0	D.17
1798510000	TM 203/12 V0	D.17
1798520000	TM 202/20 V0	D.17
1798530000	TM 202/18 V0	D.17
1798540000	TM 202/15 V0	D.17
1798560000	TM 202/12 V0	D.17
1798580000	TM 201/20 V0	D.17
1798600000	TM 201/18 V0	D.17
1798620000	TM 201/15 V0	D.17
1798640000	TM 201/12 V0	D.17
1798650000	TM 200/15 V0	D.17

1800000000

1804480000	ET S7-12/50 GE-A4	E.68
1805480000	BZT 2 WS 10/5	C.87
1805490000	BZT 1 WS 10/5	C.87
1805520000	BZT 1 ZA WS 10/5	C.87
1805720000	SFC 1/30 MC NE BL	D.11
1805730000	SFC 1/30 MC NE GE	D.11
1805740000	SFC 1/30 MC NE RT	D.11
1805750000	SFC 1/30 MC SDR	D.11
1805760000	SFC 1/30 MC NE WS	D.11
1805770000	SFC 2/21 MC NE BL	D.11
1805780000	SFC 2/21 MC NE GE	D.11
1805790000	SFC 2/21 MC NE RT	D.11
1805800000	SFC 2/21 MC SDR	D.11
1805810000	SFC 2/21 MC NE WS	D.11
1805820000	SFC 2/30 MC NE BL	D.11
1805830000	SFC 2/30 MC NE GE	D.11
1805840000	ETO SM 27/27	E.30
1805850000	SFC 2/30 MC NE RT	D.11
1805860000	SFC 2/30 MC SDR	D.11
1805870000	SFC 2/30 MC NE WS	D.11
1805880000	SNAPMARK I	C.87
1806120000	EM 8/30	C.86
1806120000	EM 8/30	C.91
1806120000	EM 8/30	D.19
1806180000	TM 204/12 V0	D.17
1806190000	TM 205/12 V0	D.17
1806200000	TM 206/12 V0	D.17
1806210000	TM 207/12 V0	D.17
1806240000	TM 204/15 V0	D.17
1806250000	TM 205/15 V0	D.17
1806260000	TM 206/15 V0	D.17
1806270000	TM 207/15 V0	D.17
1806300000	TM 204/18 V0	D.17
1806310000	TM 205/18 V0	D.17
1806320000	TM 206/18 V0	D.17
1806330000	TM 207/18 V0	D.17
1806360000	TM 204/20 V0	D.17
1806370000	TM 205/20 V0	D.17
1806380000	TM 206/20 V0	D.17
1806390000	TM 207/20 V0	D.17

1810000000

1812630000	SM 27/8 K MC NE WS	E.28
1812660000	KSW 2.5 EL WS 50M	E.73
1812670000	KSW 4.0 EL WS 50M	E.73
1813130000	SFC 0/12 MC NE WS	D.11
1813150000	SFC 0/12 MC NE RT	D.11
1813160000	SFC 0/12 MC NE GE	D.11
1813170000	SFC 0/12 MC NE BL	D.11
1813180000	SFC 0/12 MC SDR	D.11
1813190000	SFC 0/21 MC NE WS	D.11
1813200000	SFC 0/21 MC NE RT	D.11
1813210000	SFC 0/21 MC NE GE	D.11
1813220000	SFC 0/21 MC NE BL	D.11
1813230000	SFC 0/21 MC SDR	D.11
1813240000	SFC 0/30 MC NE WS	D.11
1813250000	SFC 0/30 MC NE RT	D.11
1813260000	SFC 0/30 MC NE GE	D.11
1813270000	SFC 0/30 MC NE BL	D.11
1813280000	SFC 0/30 MC SDR	D.11
1816240000	MF-W 5/5 MINI MC NE WS	C.57
1816250000	MF 5/5 MC NE WS	C.43
1816260000	MF 5/6 MC NE WS	C.47
1816270000	MF-W 9/5 MC NE WS	C.54
1816280000	MF-W 9/5F MC NE WS	C.54
1816290000	MF-W 9/6 MC NE WS	C.56
1816310000	MF-W 5/5 MINI MC SDR	C.57
1816320000	MF 5/5 MC SDR	C.43
1816330000	MF 5/6 MC SDR	C.47
1816340000	MF-W 9/5 MC SDR	C.54
1816350000	MF-W 9/5F MC SDR	C.54
1816360000	MF-W 9/6 MC SDR	C.56
1818400000	WS 10/6 M MC NE WS	C.28
1818410000	WS 10/6 MC M SDR	C.28

1820000000

1821020000	ET S7-300-GE-A4-1	E.68
1821030000	ET S7-400-GE-A4-2	E.68
1821040000	ET S7-400-GE-A4-1	E.68
1828450000	WS 10/6 MC NE WS	C.27

Order No.	Type	Page
1828460000	WS 10/6 MC SDR	C.27

1830000000

1835820000	LM MT300 17/6 GE	E.69
1835830000	LM MT300 19/6.3 GE	E.69

1840000000

1847640000	ET S7-400-GE-A4-3	E.68
1847650000	ET S7-300-GE-A4-2	E.68

1850000000

1852360000	SFX 10/23 MC NE GE V2	D.9
1852370000	SFX 10/23 MC NE RT V2	D.9
1852380000	SFX 10/23 MC SDR V2	D.9
1852390000	SFX 10/23 MC NE WS V2	D.9
1852400000	SFX 10/23 MC NE BL V2	D.9
1852410000	SFX 14/23 MC NE GE V2	D.9
1852420000	SFX 14/23 MC NE RT V2	D.9
1852430000	SFX 14/23 MC SDR V2	D.9
1852440000	SFX 14/23 MC NE WS V2	D.9
1852450000	SFX 14/23 MC NE BL V2	D.9
1852460000	SFX 9/24 MC NE GE V2	D.9
1852470000	SFX 9/24 MC NE RT V2	D.9
1852480000	SFX 9/24 MC SDR V2	D.9
1852490000	SFX 9/24 MC NE WS V2	D.9
1852500000	SFX 9/24 MC NE BL V2	D.9
1852520000	THM MT30X 16/7 GE	E.66
1852540000	THM MT30X 57/27 SI	E.66
1852980000	WS 14/5 MC SDR	C.26
1854090000	WS 10/15 MC NE WS	C.33
1854100000	WS 10/15 MC SDR	C.33
1854490000	DEK 5/5 PLUS MC NE WS	C.14
1854500000	DEK 5/5 PLUS MC SDR	C.14
1854510000	MF 10/5 CABUR MC NE WS	C.45
1854520000	MF 12/5 CABUR MC NE WS	C.46
1856630000	THM WO 12/18 GE	D.41
1856640000	THM WO 12/18 WS	D.41
1856650000	THM MT30X 17/9 GE	E.66
1856700000	ESG 10/17 MC NE WS	E.22
1856710000	ESG 10/17 MC SDR	E.22
1856720000	ESG 9/20 UNI MC NE WS	E.21
1856730000	ESG 9/20 UNI MC SDR	E.21
1856740000	DEK 5/8 MC NE WS	C.18
1856750000	DEK 5/8 MC SDR	C.18
1856760000	MF 10/10 MC NE WS	C.49
1856770000	MF 10/10 MC SDR	C.49
1856780000	MFF 10/6 MC NE WS	C.51
1856790000	MFF 10/6 MC SDR	C.51
1857440000	ESG 9/11 K MC NE WS	E.18
1857450000	ESG 9/11 K MC SDR	E.18
1859410000	CBFP 43.5/10 BLACK	D.99

1860000000

1860120000	SFX 11/60 MC NE WS	D.9
1860140000	SFX 11/60 MC SDR	D.9
1860150000	SFX 11/60 MC NE GE	D.9
1861510000	LM MT300 27/8 GE	E.69
1865440000	ET S7-12/50-TU-A4	E.68
1865450000	ET S7-300-TU-A4-1	E.68
1865460000	ET S7-300-TU-A4-2	E.68
1865470000	ET S7-400-TU-A4-1	E.68
1865480000	ET S7-400-TU-A4-2	E.68
1865490000	ET S7-400-TU-A4-3	E.68
1866680000	TMX 30 V0	D.17
1866690000	ESG 9/20 MC NE TK	E.20
1868430000	MF 10/8 MC SDR	C.48
1868440000	MF 10/8 MC NE WS	C.48
1868811150	CLI C 1-6 GE/SW X1 CD	D.65
1868811151	CLI C 1-6 GE/SW X2 CD	D.65
1868811522	CLI C 1-6 GE/SW 01 CD	D.63
1868811523	CLI C 1-6 GE/SW 02 CD	D.63
1868811524	CLI C 1-6 GE/SW 03 CD	D.63
1868811525	CLI C 1-6 GE/SW 04 CD	D.63
1868811526	CLI C 1-6 GE/SW 05 CD	D.63
1868811527	CLI C 1-6 GE/SW 06 CD	D.63
1868811528	CLI C 1-6 GE/SW 07 CD	D.63
1868811529	CLI C 1-6 GE/SW 08 CD	D.63
1868811530	CLI C 1-6 GE/SW 09 CD	D.63
1868811531	CLI C 1-6 GE/SW 10 CD	D.63
1868811532	CLI C 1-6 GE/SW 11 CD	D.63
1868811533	CLI C 1-6 GE/SW 12 CD	D.63
1868811534	CLI C 1-6 GE/SW 13 CD	D.63
1868811535	CLI C 1-6 GE/SW 14 CD	D.63
1868811536	CLI C 1-6 GE/SW 15 CD	D.63
1868811537	CLI C 1-6 GE/SW 16 CD	D.63
1868811538	CLI C 1-6 GE/SW 17 CD	D.63
1868811539	CLI C 1-6 GE/SW 18 CD	D.63
1868811540	CLI C 1-6 GE/SW 19 CD	D.63
1868811541	CLI C 1-6 GE/SW 20 CD	D.63
1868811542	CLI C 1-6 GE/SW 21 CD	D.63
1868811543	CLI C 1-6 GE/SW 22 CD	D.63
1868811544	CLI C 1-6 GE/SW 23 CD	D.63
1868811545	CLI C 1-6 GE/SW 24 CD	D.63
1868811546	CLI C 1-6 GE/SW 25 CD	D.63
1868811547	CLI C 1-6 GE/SW 26 CD	D.63
1868811548	CLI C 1-6 GE/SW 27 CD	D.63
1868811549	CLI C 1-6 GE/SW 28 CD	D.63
1868811550	CLI C 1-6 GE/SW 29 CD	D.63
1868811551	CLI C 1-6 GE/SW 30 CD	D.63
1868811552	CLI C 1-6 GE/SW 31 CD	D.63
1868811553	CLI C 1-6 GE/SW 32 CD	D.63
1868811554	CLI C 1-6 GE/SW 33 CD	D.63
1868811555	CLI C 1-6 GE/SW 34 CD	D.63
1868811556	CLI C 1-6 GE/SW 35 CD	D.63
1868811557	CLI C 1-6 GE/SW 36 CD	D.63
1868811558	CLI C 1-6 GE/SW 37 CD	D.63
1868811559	CLI C 1-6 GE/SW 38 CD	D.63
1868811560	CLI C 1-6 GE/SW 39 CD	D.63
1868811561	CLI C 1-6 GE/SW 40 CD	D.63
1868811562	CLI C 1-6 GE/SW 41 CD	D.63
1868811563	CLI C 1-6 GE/SW 42 CD	D.63
1868811564	CLI C 1-6 GE/SW 43 CD	D.63
1868811565	CLI C 1-6 GE/SW 44 CD	D.63
1868811566	CLI C 1-6 GE/SW 45 CD	D.63
1868811567	CLI C 1-6 GE/SW 46 CD	D.63
1868811568	CLI C 1-6 GE/SW 47 CD	D.63
1868811569	CLI C 1-6 GE/SW 48 CD	D.63
1868811570	CLI C 1-6 GE/SW 49 CD	D.63
1868811571	CLI C 1-6 GE/SW 50 CD	D.63
1868811572	CLI C 1-6 GE/SW 51 CD	D.64
1868811573	CLI C 1-6 GE/SW 52 CD	D.64
1868811574	CLI C 1-6 GE/SW 53 CD	D.64
1868811575	CLI C 1-6 GE/SW 54 CD	D.64
1868811576	CLI C 1-6 GE/SW 55 CD	D.64
1868811577	CLI C 1-6 GE/SW 56 CD	D.64
1868811578	CLI C 1-6 GE/SW 57 CD	D.64
1868811579	CLI C 1-6 GE/SW 58 CD	D.64
1868811580	CLI C 1-6 GE/SW 59 CD	D.64
1868811581	CLI C 1-6 GE/SW 60 CD	D.64
1868811582	CLI C 1-6 GE/SW 61 CD	D.64
1868811583	CLI C 1-6 GE/SW 62 CD	D.64
1868811584	CLI C 1-6 GE/SW 63 CD	D.64
1868811585	CLI C 1-6 GE/SW 64 CD	D.64
1868811586	CLI C 1-6 GE/SW 65 CD	D.64
1868811587	CLI C 1-6 GE/SW 66 CD	D.64
1868811588	CLI C 1-6 GE/SW 67 CD	D.64
1868811589	CLI C 1-6 GE/SW 68 CD	D.64
1868811590	CLI C 1-6 GE/SW 69 CD	D.64
1868811591	CLI C 1-6 GE/SW 70 CD	D.64
1868811592	CLI C 1-6 GE/SW 71 CD	D.64
1868811593	CLI C 1-6 GE/SW 72 CD	D.64
1868811594	CLI C 1-6 GE/SW 73 CD	D.64
1868811595	CLI C 1-6 GE/SW 74 CD	D.64
1868811596	CLI C 1-6 GE/SW 75 CD	D.64
1868811597	CLI C 1-6 GE/SW 76 CD	D.64
1868811598	CLI C 1-6 GE/SW 77 CD	D.64
1868811599	CLI C 1-6 GE/SW 78 CD	D.64
1868811600	CLI C 1-6 GE/SW 79 CD	D.64
1868811601	CLI C 1-6 GE/SW 80 CD	D.64
1868811602	CLI C 1-6 GE/SW 81 CD	D.64
1868811603	CLI C 1-6 GE/SW 82 CD	D.64
1868811604	CLI C 1-6 GE/SW 83 CD	D.64
1868811605	CLI C 1-6 GE/SW 84 CD	D.64
1868811606	CLI C 1-6 GE/SW 85 CD	D.64
1868811607	CLI C 1-6 GE/SW 86 CD	D.64
1868811608	CLI C 1-6 GE/SW 87 CD	D.64
1868811609	CLI C 1-6 GE/SW 88 CD	D.64
1868811610	CLI C 1-6 GE/SW 89 CD	D.64
1868811611	CLI C 1-6 GE/SW 90 CD	D.64
1868811612	CLI C 1-6 GE/SW 91 CD	D.64
1868811613	CLI C 1-6 GE/SW 92 CD	D.64
1868811614	CLI C 1-6 GE/SW 93 CD	D.64
1868811615	CLI C 1-6 GE/SW 94 CD	D.64
1868811616	CLI C 1-6 GE/SW 95 CD	D.64
1868811617	CLI C 1-6 GE/SW 96 CD	D.64
1868811618	CLI C 1-6 GE/SW 97 CD	D.64
1868811619	CLI C 1-6 GE/SW 98 CD	D.64
1868811620	CLI C 1-6 GE/SW 99 CD	D.64
1868811687	CLI C 1-6 GE NE CD	D.48
1868811726	CLI C 1-6 GE/SW A1 CD	D.65
1868811727	CLI C 1-6 GE/SW A2 CD	D.65
1868811728	CLI C 1-6 GE/SW L1 CD	D.65
1868811729	CLI C 1-6 GE/SW L2 CD	D.65
1868811730	CLI C 1-6 GE/SW L3 CD	D.65
1868811731	CLI C 1-6 GE/SW MP CD	D.65
1868811733	CLI C 1-6 GE/SW PE CD	D.65
1868811734	CLI C 1-9 GE/SW PEN CD	D.65
1868811735	CLI C 1-6 GE/SW U1 CD	D.65
1868811736	CLI C 1-6 GE/SW U2 CD	D.65
1868811737	CLI C 1-6 GE/SW U3 CD	D.65
1868811738	CLI C 1-6 GE/SW UN CD	D.65
1868811739	CLI C 1-6 GE/SW I1 CD	D.65
1868811740	CLI C 1-6 GE/SW I2 CD	D.65
1868811741	CLI C 1-6 GE/SW IC CD	D.65
1868819999	CLI C 1-9 SDR SG	D.50
1869821502	CLI C 02-3 WS/SW 0 CD	D.53
1869821505	CLI C 02-3 WS/SW 1 CD	D.53
1869821508	CLI C 02-3 WS/SW 2 CD	D.53
1869821511	CLI C 02-3 WS/SW 3 CD	D.53
1869821514	CLI C 02-3 WS/SW 4 CD	D.53
1869821517	CLI C 02-3 WS/SW 5 CD	D.53
1869821520	CLI C 02-3 WS/SW 6 CD	D.53
1869821523	CLI C 02-3 WS/SW 7 CD	D.53
1869821526	CLI C 02-3 WS/SW 8 CD	D.53
1869821740	CLI C 02-3 WS/SW - CD	D.54
1869999999	CLI C 02-6 SDR CD	D.49

1870000000

1871751728	CLI M 2-6 GE/SW L1 MP	D.90
1871751729	CLI M 2-6 GE/SW L2 MP	D.90
1871751730	CLI M 2-6 GE/SW L3 MP	D.90
1871781728	CLI M 2-6 GE/SW L1 CD	D.90
1871781729	CLI M 2-6 GE/SW L2 CD	D.90
1871781730	CLI M 2-6 GE/SW L3 CD	D.90
1871789999	CLI M 2-6 SDR CD	D.86
1871801687	CLI C 1-18 GE NE SG	D.48
1871809999	CLI C 1-18 SDR SG	D.50
1871831687	CLI C 2-18 GE NE SG	D.48
1871839999	CLI C 2-18 SDR SG	D.50
1871891728	CLI C 2-6 GE/SW L1 MP	D.69
1871891729	CLI C 2-6 GE/SW L2 MP	D.69
1871891730	CLI C 2-6 GE/SW L3 MP	D.69
1871901728	CLI C 2-6 GE/SW L1 CD	D.69
1871901729	CLI C 2-6 GE/SW L2 CD	D.69
1871901730	CLI C 2-6 GE/SW L3 CD	D.69
1871901731	CLI C 2-6 GE/SW PE CD	D.69
1871909999	CLI C 2-6 SDR CD	D.50
1871971687	CLI C 2-9 GE NE CD	D.48
1871971734	CLI C 2-9 GE/SW PEN CD	D.69
1871979999	CLI C 2-9 SDR SG	D.50
1872031734	CLI C 2-9 GE/SW PEN MP	D.69
1872309999	CLI C 3-6 SDR SG	D.51
1872659999	CLI C 3-9 SDR SG	D.51
1872661733	CLI C 3-9 GE/SW PEN MP	D.71
1872679999	CLI C 3-18 SDR SG	D.51
1873330000	CLI C 02-12 SDR SG	D.49
1873340000	CLI C 02-21 SDR SG	D.49
1873350000	CLI C 1-12 SDR SG	D.50
1873360000	CLI C 1-15 SDR SG	D.50
1873370000	CLI C 1-21 SDR SG	D.50
1873380000	CLI C 2-12 SDR SG	D.50
1873390000	CLI C 2-15 SDR SG	D.50
1873400000	CLI C 2-21 SDR SG	D.50
1873410000	CLI C 3-21 SDR SG	D.51
1873420000	CLI C 3-12 SDR SG	D.51
1873430000	CLI C 3-15 SDR SG	D.51
1873440000	CLI M 2-9 SDR SG	D.85
1873450000	CLI M 2-12 SDR SG	D.85
1873460000	CLI M 2-21 SDR SG	D.85
1873741687	CLI C 02-18 GE NE SG	D.47
1873749999	CLI C 02-18 SDR SG	D.49
1873810000	LM MT300 27/18 SI	E.69
1874760000	TM 202/30 V0	D.17
1874770000	TM 203/30 V0	D.17
1874780000	TM 204/30 V0	D.17
1874790000	TM 205/30 V0	D.17
1874800000	TM 206/30 V0	D.17
1874820000	TM 207/30 V0	D.17
1874850000	TM 201/30 V0	D.17
1876320000	TM-I 30 MC SDR	D.13
1876370000	TM-I 30 MC NE GE	D.13
1876380000	TM-I 30 MC NE RT	D.13
1876390000	TM-I 30 MC NE WS	D.13
1876400000	TM-I 30 MC NE BL	D.13
1876570000	CC 15/17 MC NE WS	E.37
1876570000	CC 15/17 MC NE WS	E.45
1876580000	CC 15/17 K MC NE SI	E.37
1876590000	CC 15/17 K MC NE WS	E.37
1876600000	CC 15/17 K MC SDR	E.37
1876610000	CC 15/17 MC NE SI	E.37
1876620000	CC 15/17 MC SDR	E.37
1876630000	CC 15/27 MC SDR	E.37
1876640000	CC 15/27 K MC NE WS	E.37
1876750000	CC 15/27 K MC SDR	E.37
1876760000	CC 15/27 MC NE SI	E.37
1876770000	CC 15/27 MC NE WS	E.37
1876770000	CC 15/27 MC NE WS	E.45
1876780000	CC 15/27 K MC NE SI	E.37
1877200000	CC 15/49 MC SDR	E.38
1877220000	CC 15/49 K MC NE WS	E.38
1877230000	CC 15/49 K MC SDR	E.38
1877240000	CC 15/49 MC NE SI	E.38
1877260000	CC 15/49 MC NE WS	E.38
1877260000	CC 15/49 MC NE WS	E.45
1877270000	CC 15/49 K MC NE SI	E.38
1877300000	CC 15/60 MC SDR	E.39
1877310000	CC 15/60 K MC NE WS	E.39
1877320000	CC 15/60 K MC SDR	E.39
1877340000	CC 15/60 MC NE SI	E.39
1877350000	CC 15/60 MC NE WS	E.39
1877350000	CC 15/60 MC NE WS	E.45
1877360000	CC 15/60 K MC NE SI	E.39
1877570000	SM 22/22 K MC NE WS	E.28
1877580000	SM 22/22 K MC SDR	E.28
1877590000	SM 22/22 K MC NE SI	E.28
1877660000	MF 5/7.5 MC SDR	C.48
1877670000	MF 5/4 MC SDR	C.42
1877680000	MF 5/7.5 MC NE WS	C.48
1877690000	MF 5/4 MC NE WS	C.42
1877700000	MFF 9/4 MC SDR	C.51
1877710000	MF-W 9/4 MC SDR	C.52
1877720000	MFF 9/4 MC NE WS	C.51
1877730000	MF-W 9/4 MC NE WS	C.52
1878910000	CC-H 15/60	E.39

1880000000

1880080000	ESG 6/17 K MC SDR	E.11
1880090000	ESG 6/15 K MC SDR	E.9
1880100000	ESG 6/15 K MC NE WS	E.9
1880110000	ESG 6/17 K MC NE GE	E.11
1880120000	ESG 6/17 K MC NE WS	E.11
1880130000	ESG 6/15 K MC NE GE	E.9
1880720000	ETO SM 22/22 TRANSPAR.	E.28
1880810000	ETO CC 15/27 TRANSPAR.	E.37
1880830000	ETO CC 15/49 TRANSPAR.	E.38
1880840000	ETO CC 15/60 TRANSPAR.	E.39
1880850000	ETO CC 15/17 TRANSPAR.	E.37
1881280000	ESG 6/15 RIDER MC NE WS	E.10
1881290000	ESG 6/15 RIDER MC SDR	E.10
1882890000	LM MT300 15/9 GE	E.69
1882900000	THM WO VIN 49.5/57.1 WS	D.42
1882910000	LM MT300 12/6 GE	E.69
1886270000	MF-SI 8/5 MC SDR	C.61
1886531687	CLI M 2-25Q GE NEUT SG	D.85
1886541687	CLI M 2-40Q GE NEUT SG	D.85
1888280000	STR CC 15/60 TRANSPARENT	E.39
1888290000	STR CC 15/27 TRANSPARENT	E.37
1888300000	STR CC 15/49 TRANSPARENT	E.38
1888310000	STR CC 15/17 TRANSPARENT	E.37
1888360000	ESG 9/6 MC NE WS	E.22
1889170000	MF-SI 10/5 MC SDR	C.61
1889180000	MF-SI 8/5 MC NE WS	C.61
1889190000	MF-SI 10/5 MC NE WS	C.61
1889230000	MF-SI 8/6 MC SDR	C.62
1889240000	MF-SI 8/6 MC NE WS	C.62
1889250000	MF-SI 10/6 MC SDR	C.62
1889260000	MF-SI 10/6 MC NE WS	C.62
1889550000	CLI T 3-30	D.16
1889560000	CLI T 1-30	D.16
1889570000	CLI T 2-30	D.16
1889580000	CLI T 02-30	D.16
1889770000	MF-SI 7/5-6.5 MC SDR	C.63
1889780000	MF-SI 7/5-6.5 MC NE WS	C.63
1889790000	MF-SI 10/5-6.5 MC SDR	C.63
1889800000	MF-SI 10/5-6.5 MC NE WS	C.63

1890000000

1890460000	ESG 9/20 L MC NE WS	E.20
1890470000	ESG 8/17 L MC NE WS	E.15
1891670000	WSMC 11-15	D.96
1891680000	WSMC 6-10	D.96
1891780000	TM 1/18 TWIN HF/HB	D.15
1891810000	TM 0/18 TWIN HF/HB	D.15
1897570000	ESG 8/11 MC NE WS	E.14
1899230000	CLI M 2-18 SDR SG	D.85
1899240000	CLI C 2-9 SDR CD	D.50
1899250000	CLI M 2-9 SDR CD	D.86
1899260000	CLI M 2-15 SDR SG	D.85
1899290000	CLI C 02-9 SDR CD	D.49

1900000000

1905490000	M-PRINT PRO	B.12
1905490000	M-PRINT PRO	F.9
1905950000	WS 10/8 PLUS MC NE WS	C.31
1905970000	WS 10/12 MC NE WS	C.32
1906000000	WS 12/8 PLUS MC NE WS	C.31
1906010000	WS 12/8 PLUS MC SDR	C.31
1906030000	WS 10/8 PLUS MC SDR	C.31
1906060000	WS 10/12 MC SDR	C.32
1906110000	SM 27/18 MC NE RT	E.29
1906120000	SM 27/18 K MC NE RT	E.29
1907520000	DEK 5/5 PLUS MC NE GE	C.14
1907530000	MF 4/5.2 MC NE WS	C.46

1910000000

1912090000	DEK 5/6 MC NE OR	C.15
1912130000	ESG 8/13.5/43.3 SAI AU	E.14
1912140000	WSMC 16-20	D.96
1912150000	WSMC 21-25	D.96
1912160000	WSMC 26-30	D.96
1912170000	WSMC 1-5	D.96
1912500000	CLI C 02-24 SDR SG	D.49
1912510000	CLI C 02-27 SDR SG	D.49
1912550000	CLI C 02-3 SDR SG	D.49
1912580000	CLI C 02-30 SDR SG	D.49
1912590000	CLI C 02-33 SDR SG	D.49
1912600000	CLI C 02-36 SDR SG	D.49
1912610000	CLI C 02-39 SDR SG	D.49
1912640000	CLI C 1-27 SDR SG	D.50
1912650000	CLI C 1-3 SDR SG	D.50
1912660000	CLI C 1-30 SDR SG	D.50
1912670000	CLI C 1-33 SDR SG	D.50
1912680000	CLI C 1-39 SDR SG	D.50
1912700000	CLI C 1-6 SDR SG	D.50
1912710000	CLI C 2-24 SDR SG	D.50
1912720000	CLI C 2-27 SDR SG	D.50
1912730000	CLI C 2-30 SDR SG	D.50

Order No.	Type	Page
1912740000	CLI C 2-33 SDR SG	D.50
1912750000	CLI C 2-36 SDR SG	D.50
1912760000	CLI C 2-39 SDR SG	D.50
1912770000	CLI C 3-24 SDR SG	D.51
1912780000	CLI C 3-27 SDR SG	D.51
1912790000	CLI C 3-30 SDR SG	D.51
1912800000	CLI C 3-33 SDR SG	D.51
1912810000	CLI C 3-36 SDR SG	D.51
1912820000	CLI C 3-39 SDR SG	D.51
1912830000	CLI M 2-4 SDR SG	D.85
1912840000	CLI M 2-6 SDR SG	D.85
1912860000	CLI M 2-24 SDR SG	D.85
1912870000	CLI M 2-27 SDR SG	D.85
1912880000	CLI M 2-30 SDR SG	D.85
1912920000	CLI M 2-33 SDR SG	D.85
1912950000	CLI M 2-36 SDR SG	D.85
1912960000	CLI M 2-39 SDR SG	D.85
1915320000	LM MT300 202/12 GE	E.69
1915340000	SM 27/18 K MC NE GE	E.29
1917420000	WS 10/6 MC M NE GN	C.28
1917430000	WS 10/6 MC M NE GE	C.28
1917440000	WS 10/6 MC M NE RT	C.28
1918470000	SF 0/21 MC SDR V2	D.7
1918480000	SF 0/21 MC NE GE V2	D.7
1918490000	SF 0/21 MC NE RT V2	D.7
1918500000	SF 0/21 MC NE WS V2	D.7
1918510000	SF 0/21 MC NE BL V2	D.7
1918530000	SF 00/21 MC SDR V2	D.7
1918560000	SF 00/21 MC NE GE V2	D.7
1918570000	SF 00/21 MC NE RT V2	D.7
1918580000	SF 00/21 MC NE WS V2	D.7
1918590000	SF 00/21 MC NE BL V2	D.7
1918600000	SF 1/21 MC NE RT V2	D.7
1918610000	SF 1/21 MC NE GE V2	D.7
1918620000	SF 1/21 MC NE BL V2	D.7
1918630000	SF 1/21 MC NE WS V2	D.7
1918640000	SF 1/21 MC SDR V2	D.7
1918650000	SF 2/21 MC SDR V2	D.7
1918660000	SF 2/21 MC NE GE V2	D.7
1918670000	SF 2/21 MC NE RT V2	D.7
1918690000	SF 2/21 MC NE WS V2	D.7
1918700000	SF 2/21 MC NE BL V2	D.7
1918880000	SF 3/21 MC SDR V2	D.7
1918890000	SF 3/21 MC NE GE V2	D.7
1918900000	SF 3/21 MC NE RT V2	D.7
1918910000	SF 3/21 MC NE WS V2	D.7
1918920000	SF 3/21 MC NE BL V2	D.7
1918990000	SF 4.5/21 MC SDR V2	D.7
1919000000	SF 4.5/21 MC NE GE V2	D.7
1919010000	SF 4.5/21 MC NE RT V2	D.7
1919020000	SF 4.5/21 MC NE WS V2	D.7
1919030000	SF 4.5/21 MC NE BL V2	D.7
1919050000	SF 4/21 MC SDR V2	D.7
1919060000	SF 4/21 MC NE GE V2	D.7
1919070000	SF 4/21 MC NE RT V2	D.7
1919080000	SF 4/21 MC NE WS V2	D.7
1919090000	SF 4/21 MC NE BL V2	D.7
1919110000	SF 5/21 MC SDR V2	D.7
1919120000	SF 5/21 MC NE GE V2	D.7
1919130000	SF 5/21 MC NE RT V2	D.7
1919140000	SF 5/21 MC NE WS V2	D.7
1919150000	SF 5/21 MC NE BL V2	D.7
1919160000	SF 6/21 MC SDR V2	D.7
1919170000	SF 6/21 MC NE GE V2	D.7
1919180000	SF 6/21 MC NE RT V2	D.7
1919190000	SF 6/21 MC NE WS V2	D.7
1919200000	SF 6/21 MC NE BL V2	D.7
1919210000	SF 0/12 MC NE GE V2	D.7
1919220000	SF 0/12 MC NE BL V2	D.7
1919230000	SF 0/12 MC NE RT V2	D.7
1919240000	SF 0/12 MC NE WS V2	D.7
1919250000	SF 0/12 MC SDR V2	D.7
1919260000	SF 00/12 MC NE GE V2	D.7
1919270000	SF 00/12 MC NE BL V2	D.7
1919280000	SF 00/12 MC NE RT V2	D.7
1919290000	SF 00/12 MC NE WS V2	D.7
1919300000	SF 00/12 MC SDR V2	D.7
1919320000	SF 1/12 MC NE RT V2	D.7
1919340000	SF 1/12 MC NE GE V2	D.7
1919360000	SF 1/12 MC NE BL V2	D.7
1919390000	SF 1/12 MC NE WS V2	D.7
1919420000	SF 1/12 MC SDR V2	D.7
1919460000	SF 2/12 MC NE RT V2	D.7
1919470000	SF 2/12 MC NE GE V2	D.7
1919480000	SF 2/12 MC NE BL V2	D.7
1919490000	SF 2/12 MC NE WS V2	D.7
1919500000	SF 2/12 MC SDR V2	D.7
1919510000	SF 3/12 MC SDR V2	D.7
1919520000	SF 3/12 MC NE GE V2	D.7
1919530000	SF 3/12 MC NE RT V2	D.7
1919540000	SF 3/12 MC NE WS V2	D.7
1919550000	SF 3/12 MC NE BL V2	D.7
1919570000	SF 4/12 MC NE RT V2	D.7
1919580000	SF 4/12 MC NE GE V2	D.7
1919590000	SF 4/12 MC NE BL V2	D.7
1919600000	SF 4/12 MC NE WS V2	D.7
1919610000	SF 4/12 MC SDR V2	D.7
1919620000	SF 5/12 MC NE GE V2	D.7
1919630000	SF 5/12 MC NE BL V2	D.7
1919640000	SF 5/12 MC NE RT V2	D.7
1919650000	SF 5/12 MC NE WS V2	D.7
1919660000	SF 5/12 MC SDR V2	D.7
1919870000	ESO 8/20 P DIN A4 WS	D.21
1919880000	ESO 8/20 P DIN A4 GE	D.21
1919890000	ESO 8/20 DIN A4 WS	D.21
1919900000	ESO 8/20 DIN A4 GE	D.21
1919940000	ESG 5/10 MC NE WS	E.9

1920000000

Order No.	Type	Page
1920640000	PLOTTER PEN 0.25 P-INK	F.11
1920640000	PLOTTER PEN 0.25 P-INK	F.13
1920650000	PLOTTER PEN 0.35 P-INK	F.11
1920650000	PLOTTER PEN 0.35 P-INK	F.13
1924260000	MF-W 5/5 MINI MC NE RT	C.57
1924270000	MF-W 5/5 MINI MC NE BL	C.57
1924280000	MF-W 5/5 MINI MC NE GE	C.57
1924290000	MF-W 5/5 MINI MC NE GN	C.57
1924310000	MCP AP SF4-6	F.11
1924310000	MCP AP SF4-6	F.13
1924330000	P-CLEANER	F.11
1924330000	P-CLEANER	F.13
1924340000	P-Ink 2.0	F.11
1924340000	P-Ink 2.0	F.13
1924360000	MCP AP PLUS	F.11
1924370000	MCP AP LABLES	F.11
1924370000	MCP AP LABLES	F.13
1924930000	WSM SERVICE BOX KOMP.	D.95
1927510000	WS 12/5 PLUS MC NE WS	C.25
1927520000	WS 12/5 PLUS MC SDR	C.25
1927530000	WS 12/6 PLUS MC NE WS	C.30
1927540000	WS 12/6 PLUS MC SDR	C.30

1930000000

Order No.	Type	Page
1934190000	THM WO 51/36 WS	D.41
1934330000	CC 30/60 K MC NE SI	E.40
1934370000	CC 30/60 K MC SDR	E.40
1934390000	CC 30/60 K MC NE WS	E.40
1934400000	CC 30/60 MC NE SI	E.40
1934410000	CC 30/60 MC SDR	E.40
1934420000	CC 30/60 MC NE WS	E.40
1934430000	CC-H 30/60	E.40
1934440000	ETO CC 30/60 TRANSPAR.	E.40
1934450000	STR CC 30/60 TRANSPARENT	E.40
1935130000	MCP EP	F.13

1950000000

Order No.	Type	Page
1950820000	SF-TOOL 00-6	D.7
1951870000	WS 8/5 PLUS MC NE WS	C.22
1951880000	WS 8/6 PLUS MC NE WS	C.27
1951920000	DEK 5/30 MC NE WS	C.19
1951920000	DEK 5/30 MC NE WS	C.86
1954050000	MF 5/10 MC NE WS	C.49
1957340000	MFF 10/6 MC NE GE	C.51

1960000000

Order No.	Type	Page
1961900000	HSS-HF 1/8 1.8-2.8/50Y	D.35
1961910000	HSS-HF 3/16 2.8-4.2/50Y	D.35
1961920000	HSS-HF 1/4 4.2-5.8/50Y	D.35
1961930000	HSS-HF 3/8 5.8-8.0/50Y	D.35
1961940000	HSS-HF 1/2 8.0-11.0/50Y	D.35
1961950000	HSS-HF 3/4 11.0-17.0/50Y	D.35
1961960000	HSS-HF 1 17.0-23.0/50Y	D.35
1961970000	HSS-HF 1/8 1.8-2.8/25Y	D.35
1961980000	HSS-HF 3/16 2.8-4.2/25Y	D.35
1961990000	HSS-HF 1/4 4.2-5.8/25Y	D.35
1962000000	HSS-HF 3/8 5.8-8.0/25Y	D.35
1962010000	HSS-HF 1/2 8.0-11.0/25Y	D.35
1962020000	HSS-HF 3/4 11.0-17.0/25Y	D.35
1962030000	HSS-HF 1 17.0-23.0/25Y	D.35
1963650000	SFX 11/60 MC NE RT	D.9
1968130000	THM MT30X 17/9 WS	E.66
1968140000	ESG 9/20 L MC SDR	E.20

1970000000

Order No.	Type	Page
1975160000	LM MT300 105/105 SI	E.69

1990000000

Order No.	Type	Page
1991670000	THM ET S7 1500 GE	E.67
1991680000	THM ET S7 1500 TU	E.67

2000000000

Order No.	Type	Page
2003750000	DEK 5/3.5 PLUS MC NE WS	C.13
2003760000	WS 10/3.5 PLUS MC NE WS	C.21
2003770000	WS 10/5 M PLUS MC NE WS	C.24
2003780000	WS 10/6 M PLUS MC NE WS	C.29
2005040000	RIBBON MM 80/300 WS	E.62
2005040000	RIBBON MM 80/300 WS	E.62
2005040000	RIBBON MM 80/300 WS	E.63
2005040000	RIBBON MM 80/300 WS	E.63
2005040000	RIBBON MM 80/300 WS	F.15
2005040000	RIBBON MM 80/300 WS	F.17
2005070000	RIBBON MM 110/360 SW	D.41
2005070000	RIBBON MM 110/360 SW	D.42
2005070000	RIBBON MM 110/360 SW	D.42
2005070000	RIBBON MM 110/360 SW	E.64
2005070000	RIBBON MM 110/360 SW	E.65
2005070000	RIBBON MM 110/360 SW	E.65
2005070000	RIBBON MM 110/360 SW	E.66
2005070000	RIBBON MM 110/360 SW	E.66
2005070000	RIBBON MM 110/360 SW	E.67
2005070000	RIBBON MM 110/360 SW	E.67
2005070000	RIBBON MM 110/360 SW	F.15
2005070000	RIBBON MM 110/360 SW	F.17
2005080000	RIBBON MM 80/360 SW	C.95
2005080000	RIBBON MM 80/360 SW	D.29
2005080000	RIBBON MM 80/360 SW	D.29
2005080000	RIBBON MM 80/360 SW	D.30
2005080000	RIBBON MM 80/360 SW	E.62
2005080000	RIBBON MM 80/360 SW	E.62
2005080000	RIBBON MM 80/360 SW	E.63
2005080000	RIBBON MM 80/360 SW	E.63
2005080000	RIBBON MM 80/360 SW	E.63
2005080000	RIBBON MM 80/360 SW	E.64
2005080000	RIBBON MM 80/360 SW	E.64
2005080000	RIBBON MM 80/360 SW	E.67
2005080000	RIBBON MM 80/360 SW	F.15
2005080000	RIBBON MM 80/360 SW	F.17
2005090000	RIBBON MM-TB 25/360 SW	C.95
2005090000	RIBBON MM-TB 25/360 SW	F.15
2005100000	ESG 6/17 MM WS	E.62
2005110000	ESG 6/17 MM GE	E.62
2005120000	ESG 6/17 MM GR	E.62
2005130000	ESG 6/17 MM SW	E.62
2005140000	ESG 8/20 MM WS	E.62
2005150000	ESG 8/20 MM GE	E.62
2005160000	ESG 8/20 MM GR	E.62
2005170000	ESG 8/20 MM SW	E.62
2005180000	ELS 8/20 MM WS	C.95
2005180000	ELS 8/20 MM WS	D.21
2005180000	ELS 8/20 MM WS	E.64
2005190000	ESG 9/17 MM WS	E.62
2005200000	ELS 16/40 MM WS	C.88
2005200000	ELS 16/40 MM WS	C.95
2005200000	ELS 16/40 MM WS	D.22
2005200000	ELS 16/40 MM WS	E.64
2005210000	ESG 9/17 MM GE	E.62
2005230000	ESG 9/17 MM GR	E.62
2005240000	ELS 8/20 MM GE	C.95
2005240000	ELS 8/20 MM GE	D.21
2005240000	ELS 8/20 MM GE	E.64
2005250000	ESG 9/17 MM SW	E.62
2005260000	ELS 16/40 MM GE	C.88
2005260000	ELS 16/40 MM GE	C.95
2005260000	ELS 16/40 MM GE	D.22
2005260000	ELS 16/40 MM GE	E.64
2005270000	CC 85/54 MM WS	E.63
2005280000	CC 85/54 MM GE	E.63
2005290000	CC 85/54 MM GR	E.63
2005310000	CC 85/54 MM SW	E.63
2005320000	SFX 9/24 MM WS	D.30
2005330000	CC 30/60 MM WS	E.63
2005340000	SFX 11/60 MM WS	D.30
2005350000	CC 30/60 MM GE	E.63
2005360000	SFX 30/60 MM WS	D.30
2005370000	CC 30/60 MM GR	E.63
2005380000	SFX 9/24 MM GE	D.30
2005390000	CC 30/60 MM SW	E.63
2005400000	SFX 11/60 MM GE	D.30
2005410000	CC 15/60 MM WS	E.63
2005420000	SFX 30/60 MM GE	D.30
2005430000	CC 15/60 MM GE	E.63
2005440000	TM-I 12 MM WS	D.29
2005450000	TM-I 15 MM WS	D.29
2005460000	CC 15/60 MM GR	E.63
2005470000	TM-I 18 MM WS	D.29
2005480000	CC 15/60 MM SW	E.63
2005490000	TM-I 20 MM WS	D.29
2005500000	CC 15/45 MM WS	E.63
2005510000	TM-I 23 MM WS	D.29
2005520000	CC 15/45 MM GE	E.63
2005530000	TM-I 30 MM WS	D.29
2005540000	CC 15/45 MM GR	E.63
2005550000	TM-I 12 MM GE	D.29
2005570000	CC 15/45 MM SW	E.63
2005580000	TM-I 15 MM GE	D.29
2005600000	CC 15/27 MM WS	E.63
2005610000	TM-I 18 MM GE	D.29
2005630000	CC 15/27 MM GE	E.63
2005640000	TM-I 20 MM GE	D.29
2005660000	CC 15/27 MM GR	E.63
2005670000	TM-I 23 MM GE	D.29
2005690000	CC 15/27 MM SW	E.63
2005700000	TM-I 30 MM GE	D.29
2005730000	TM-I 12 MM RT	D.29
2005760000	TM-I 15 MM RT	D.29
2005790000	TM-I 18 MM RT	D.29
2005810000	SM 27/18-22 MM GE	E.63
2005820000	TM-I 20 MM RT	D.29
2005840000	SM 27/18-22 MM WS	E.63
2005850000	TM-I 23 MM RT	D.29
2005860000	SM 27/18-22 MM GR	E.63
2005870000	TM-I 30 MM RT	D.29
2005880000	SM 27/18-22 MM SW	E.63
2005890000	TM-I 12 MM BL	D.29
2005900000	SM 27/18-22 MM RT	E.63
2005910000	TM-I 15 MM BL	D.29
2005920000	SM 27/18-22 MM GN	E.63
2005930000	TM-I 18 MM BL	D.29
2005950000	TM-I 20 MM BL	D.29
2005970000	TM-I 23 MM BL	D.29
2005990000	TM-I 30 MM BL	D.29
2006010000	WM 0/21 1.0-2.0 MM WS	D.29
2006030000	WM 1/21 2.0-3.5 MM WS	D.29
2006050000	WM 2/21 3.5-5.0 MM WS	D.29
2006060000	SM DIA 60-22 MM GE	E.63
2006070000	WM 3/21 5.0-8.0 MM WS	D.29
2006080000	SM 36/18-30 MM GE	E.63
2006090000	WM 0/21 1.0-2.0 MM GE	D.29
2006100000	SM 36/18-30 MM WS	E.63
2006110000	WM 1/21 2.0-3.5 MM GE	D.29
2006120000	SM 36/18-30 MM GR	E.63
2006130000	WM 2/21 3.5-5.0 MM GE	D.29
2006140000	SM 36/18-30 MM SW	E.63
2006150000	WM 3/21 5.0-8.0 MM GE	D.29
2006160000	SM 36/18-30 MM RT	E.63
2006170000	WM 0/12 1.0-2.0 MM WS	D.29
2006180000	SM 36/18-30 MM GN	E.63
2006190000	WM 1/12 2.0-3.5 MM WS	D.29
2006200000	SM 18/9.5 MM SW	E.62
2006210000	WM 2/12 3.5-5.0 MM WS	D.29
2006220000	SM 18/9.5 MM WS	E.62
2006230000	WM 3/12 5.0-8.0 MM WS	D.29
2006240000	SM 18/9.5 MM GE	E.62
2006250000	WM 0/12 1.0-2.0 MM GE	D.29
2006260000	SM 18/9.5 MM GR	E.62
2006270000	WM 1/12 2.0-3.5 MM GE	D.29
2006280000	SM 27/18 MM WS	E.62
2006290000	WM 2/12 3.5-5.0 MM GE	D.29
2006300000	SM 27/18 MM GE	E.62
2006310000	WM 3/12 5.0-8.0 MM GE	D.29
2006320000	SM 27/18 MM SW	E.62
2006330000	WM 0/6 1.0-2.0 MM WS	D.29
2006340000	SM 27/18 MM GR	E.62
2006350000	WM 1/6 2.0-3.5 MM WS	D.29
2006360000	SM 27/18 MM RT	E.62
2006370000	WM 2/6 3.5-5.0 MM WS	D.29
2006380000	SM 27/18 MM GN	E.62
2006390000	WM 3/6 5.0-8.0 MM WS	D.29
2006400000	SM 27/8 MM WS	E.62
2006410000	WM 0/6 1.0-2.0 MM GE	D.29
2006420000	SM 27/8 MM GE	E.62
2006430000	WM 1/6 2.0-3.5 MM GE	D.29
2006440000	SM 27/8 MM SW	E.62
2006450000	WM 2/6 3.5-5.0 MM GE	D.29
2006460000	SM 27/8 MM RT	E.62
2006470000	WM 3/6 5.0-8.0 MM GE	D.29
2006480000	SM 27/8 MM GR	E.62
2006490000	SM 27/8 MM GN	E.62
2006500000	SM 27/12.5 MM WS	E.62
2006510000	SM 27/12.5 MM GE	E.62
2006520000	SM 27/12.5 MM GR	E.62
2006530000	SM 27/12.5 MM SW	E.62
2006540000	SM 27/12.5 MM RT	E.62
2006550000	SM 27/12.5 MM GN	E.62
2006560000	EL 12 MM SI 30M	E.64
2006570000	EL 12 MM WS 30M	E.64
2006580000	EL 12 MM GE 30M	E.64
2006590000	EL 15 MM WS 30M	E.64
2006600000	EL 15 MM GE 30M	E.64
2006610000	EL 15 MM SI 30M	E.64
2006620000	EL 27 MM SI 30M	E.64
2006630000	EL 27 MM WS 30M	E.64
2006640000	EL 27 MM GE 30M	E.64
2006650000	EL 38 MM SI 30M	E.64
2006660000	EL 38 MM WS 30M	E.64
2006670000	EL 38 MM GE 30M	E.64
2006680000	EL 60 MM SI 30M	E.64
2006690000	EL 60 MM WS 30M	E.64
2006700000	EL 60 MM GE 30M	E.64
2006710000	EL 100 MM SI 30M	E.64
2006720000	EL 100 MM WS 30M	E.64
2006730000	EL 100 MM GE 30M	E.64
2007100000	DEK 5/3.5 MM WS	C.95
2007110000	DEK 5/5 MM WS	C.95
2007120000	DEK 5/6 MM WS	C.95
2007130000	DEK 5/8 MM WS	C.95
2007140000	WS 8/3.5 MM WS	C.95
2007150000	WS 8/5 MM WS	C.95
2007160000	WS 8/6 MM WS	C.95
2007170000	WS 8/8 MM WS	C.95
2007180000	WS 12/3.5 MM WS	C.95
2007190000	WS 12/5 MM WS	C.95
2007200000	WS 12/6 MM WS	C.95
2007210000	WS 12/8 MM WS	C.95
2007760000	WS 10/3.5 PLUS MC SDR	C.21
2007770000	WS 10/5 M PLUS MC SDR	C.24
2007780000	WS 10/6 M PLUS MC SDR	C.29
2007790000	DEK 5/3.5 PLUS MC SDR	C.13
2009890000	SFX 10/60 S MC NE WS V0	D.9

Order No.	Type	Page
2009900000	SFX 10/60 S MC NE GE V0	D.9
2009910000	SFX 9/40 S MC NE WS V0	D.9
2009920000	SFX 9/40 S MC NE GE V0	D.9
2009930000	SFX 9/24 S MC NE WS V0	D.9
2009940000	SFX 9/24 S MC NE GE V0	D.9
2009980000	ELS 6/30 MM WS	C.86
2009980000	ELS 6/30 MM WS	C.95
2009980000	ELS 6/30 MM WS	D.21
2009980000	ELS 6/30 MM WS	E.64

2010000000

2010620000	ELS 6/30 MM GE	C.86
2010620000	ELS 6/30 MM GE	C.95
2010620000	ELS 6/30 MM GE	D.21
2010620000	ELS 6/30 MM GE	E.64

2040000000

2047320000	MF-ABB 12/5 MC NE WS	C.64
2047340000	MF-ABB 12/6 MC NE WS	C.64
2047350000	MF-ABB 12/8 MC NE WS	C.65
2047360000	ESG 15/10 MC NE WS	E.24
2047380000	CC DIA 30 K MC NE WS	E.43
2047390000	CC DIA 30 K MC NE GE	E.43
2047400000	CC DIA 30 K MC NE GR	E.43
2047430000	ESG 9/17.7 K MC NE WS	E.18
2047460000	MF-ABB 12/5 MC SDR	C.64
2047510000	MF-ABB 12/6 MC SDR	C.64
2047520000	MF-ABB 12/8 MC SDR	C.65
2047540000	ESG 15/10 MC SDR	E.24
2047550000	ESG 9/17.7 K MC SDR	E.18
2047560000	CC DIA 30 K MC SDR	E.43

2060000000

2068020000	PRIMER CC-M	D.25
2068020000	PRIMER CC-M	D.25
2068020000	PRIMER CC-M	D.26
2068020000	PRIMER CC-M	D.26
2068020000	PRIMER CC-M	E.49
2068020000	PRIMER CC-M	E.49
2068020000	PRIMER CC-M	E.50
2068020000	PRIMER CC-M	E.50
2068020000	PRIMER CC-M	E.51
2068020000	PRIMER CC-M	E.51
2068020000	PRIMER CC-M	E.52
2068020000	PRIMER CC-M	E.52
2068020000	PRIMER CC-M	E.53
2068020000	PRIMER CC-M	E.53
2068020000	PRIMER CC-M	E.54
2068020000	PRIMER CC-M	E.54
2068020000	PRIMER CC-M	E.55
2068020000	PRIMER CC-M	E.55
2068020000	PRIMER CC-M	E.56
2068020000	PRIMER CC-M	E.56
2068020000	PRIMER CC-M	E.57
2068020000	PRIMER CC-M	E.57
2068020000	PRIMER CC-M	E.58
2068020000	PRIMER CC-M	E.58
2068020000	PRIMER CC-M	E.59

2090000000

2093010000	THM ET S7 1500-13 TU	E.67
2093070000	THM ET S7 1500-13 GE	E.67

2120000000

2123070000	CC 85/27 K MC NE SI	E.41

2430000000

2430920000	THM MMP	F.15
2437470000	HS 0.8-2.4/25 MM W	D.33
2437480000	HS 0.8-2.4/25 MM Y	D.33
2437490000	HS 0.8-2.4/50 MM W	D.33
2437500000	HS 0.8-2.4/50 MM Y	D.33
2437510000	HS 1.0-3.2/25 MM W	D.33
2437520000	HS 1.0-3.2/25 MM Y	D.33
2437530000	HS 1.0-3.2/50 MM W	D.33
2437540000	HS 1.0-3.2/50 MM Y	D.33
2437550000	HS 1.6-4.8/25 MM W	D.33
2437560000	HS 1.6-4.8/25 MM Y	D.33
2437570000	HS 1.6-4.8/50 MM W	D.33
2437580000	HS 1.6-4.8/50 MM Y	D.33
2437590000	HS 12.7-38.1/25 MM W	D.33
2437600000	HS 12.7-38.1/25 MM Y	D.33
2437610000	HS 12.7-38.1/50 MM W	D.33
2437620000	HS 12.7-38.1/50 MM Y	D.33
2437630000	HS 2.1-6.4/25 MM W	D.33
2437640000	HS 2.1-6.4/25 MM Y	D.33
2437650000	HS 2.1-6.4/50 MM W	D.33
2437660000	HS 2.1-6.4/50 MM Y	D.33
2437670000	HS 3.2-9.5/25 MM W	D.33
2437680000	HS 3.2-9.5/25 MM Y	D.33
2437690000	HS 3.2-9.5/50 MM W	D.33
2437700000	HS 3.2-9.5/50 MM Y	D.33
2437710000	HS 4.2-12.7/25 MM W	D.33

Order No.	Type	Page
2437720000	HS 4.2-12.7/25 MM Y	D.33
2437730000	HS 4.2-12.7/50 MM W	D.33
2437740000	HS 4.2-12.7/50 MM Y	D.33
2437750000	HS 6.4-19.1/25 MM W	D.33
2437760000	HS 6.4-19.1/25 MM Y	D.33
2437770000	HS 6.4-19.1/50 MM W	D.33
2437780000	HS 6.4-19.1/50 MM Y	D.33
2437790000	HS 8.5-25.4/25 MM W	D.33
2437800000	HS 8.5-25.4/25 MM Y	D.33
2437810000	HS 8.5-25.4/50 MM W	D.33
2437820000	HS 8.5-25.4/50 MM Y	D.33
2437830000	HS-HF 1.2-2.4/25 MM W	D.34
2437840000	HS-HF 1.2-2.4/25 MM Y	D.34
2437850000	HS-HF 1.2-2.4/50 MM W	D.34
2437860000	HS-HF 1.2-2.4/50 MM Y	D.34
2437870000	HS-HF 1.6-3.2/25 MM W	D.34
2437880000	HS-HF 1.6-3.2/25 MM Y	D.34
2437890000	HS-HF 1.6-3.2/50 MM W	D.34
2437900000	HS-HF 1.6-3.2/50 MM Y	D.34
2437910000	HS-HF 12.7-25.4/25 MM W	D.34
2437920000	HS-HF 12.7-25.4/25 MM Y	D.34
2437930000	HS-HF 12.7-25.4/50 MM W	D.34
2437940000	HS-HF 12.7-25.4/50 MM Y	D.34
2437950000	HS-HF 19.5-38.1/25 MM W	D.34
2437960000	HS-HF 19.5-38.1/25 MM Y	D.34
2437970000	HS-HF 19.5-38.1/50 MM W	D.34
2437980000	HS-HF 19.5-38.1/50 MM Y	D.34
2437990000	HS-HF 2.4-4.8/25 MM W	D.34
2438000000	HS-HF 2.4-4.8/25 MM Y	D.34
2438010000	HS-HF 2.4-4.8/50 MM W	D.34
2438020000	HS-HF 2.4-4.8/50 MM Y	D.34
2438040000	HS-HF 3.2-6.4/25 MM W	D.34
2438050000	HS-HF 3.2-6.4/25 MM Y	D.34
2438060000	HS-HF 3.2-6.4/50 MM W	D.34
2438070000	HS-HF 3.2-6.4/50 MM Y	D.34
2438090000	HS-HF 4.8-9.5/25 MM W	D.34
2438100000	HS-HF 4.8-9.5/25 MM Y	D.34
2438110000	HS-HF 4.8-9.5/50 MM W	D.34
2438120000	HS-HF 4.8-9.5/50 MM Y	D.34
2438140000	HS-HF 6.4-12.7/25 MM W	D.34
2438150000	HS-HF 6.4-12.7/25 MM Y	D.34
2438160000	HS-HF 6.4-12.7/50 MM W	D.34
2438170000	HS-HF 6.4-12.7/50 MM Y	D.34
2438190000	HS-HF 9.5-19.1/25 MM W	D.34
2438200000	HS-HF 9.5-19.1/25 MM Y	D.34
2438210000	HS-HF 9.5-19.1/50 MM W	D.34
2438220000	HS-HF 9.5-19.1/50 MM Y	D.34
2438510000	MCP PLUS 2	F.11
2438520000	MCP BASIC 2	F.13

2440000000

2445070000	WAD 12 MC NE WS	C.83
2445080000	WAD 12 MC NE GE	C.83
2445090000	WAD 12 MC B GE/SW	C.83
2445100000	WAD 12 MC SDR	C.83
2448860000	DEK-A 5/8 MM WS	C.95
2448870000	THM PLUS M	F.17
2448880000	RIBBON MM-HS 60/300 SW	D.33
2448880000	RIBBON MM-HS 60/300 SW	D.33
2448880000	RIBBON MM-HS 60/300 SW	D.34
2448880000	RIBBON MM-HS 60/300 SW	D.34
2448880000	RIBBON MM-HS 60/300 SW	D.35
2448880000	RIBBON MM-HS 60/300 SW	D.35
2448880000	RIBBON MM-HS 60/300 SW	F.15
2448880000	RIBBON MM-HS 60/300 SW	F.17
2448880000	RIBBON MM-HS 60/300 SW	F.19
2448920000	WS-A 12/8 MM WS	C.95
2448930000	WS-A 8/8 MM WS	C.95

2450000000

2455620000	THM MT30X 101/74 WS	E.66
2457760000	THM MMP CASE	F.15

2490000000

2493070000	MCP PLUS 2 COVER	F.11
2493080000	MCP BASIC 2 COVER	F.13

7940000000

7940006040	CB 135/2.5 NATUR	D.98
7940006047	CB 135/2.5 BLACK	D.98
7940006048	CB 160/2.6 NATUR	D.98
7940006049	CB 160/2.6 BLACK	D.98
7940006050	CB 200/2.6 NATUR	D.98
7940006051	CB 200/2.6 BLACK	D.98
7940006052	CB 120/4.5 NATUR	D.98
7940006053	CB 120/4.5 BLACK	D.98
7940006054	CB 250/4.8 NATUR	D.98
7940006055	CB 250/4.8 BLACK	D.98
7940006056	CB 370/3.5 NATUR	D.98
7940006057	CB 370/3.5 BLACK	D.98
7940006058	CB 390/4.8 NATUR	D.98
7940006059	CB 390/4.8 BLACK	D.98
7940006060	CB 430/4.5 NATUR	D.98
7940006061	CB 430/4.5 BLACK	D.98
7940006062	CB 120/7.8 NATUR	D.98

Order No.	Type	Page
7940006063	CB 120/7.8 BLACK	D.98
7940006064	CB 180/7.8 NATUR	D.98
7940006065	CB 180/7.8 BLACK	D.98
7940006066	CB 240/7.8 NATUR	D.98
7940006067	CB 240/7.8 BLACK	D.98
7940006068	CB 300/7.8 NATUR	D.98
7940006069	CB 300/7.8 BLACK	D.98
7940006070	CB 450/7.5 NATUR	D.98
7940006071	CB 450/7.5 BLACK	D.98
7940006072	CB 540/7.5 NATUR	D.98
7940006073	CB 540/7.5 BLACK	D.98
7940006074	CB 780/9.0 NATUR	D.98
7940006075	CB 780/9.0 BLACK	D.98
7940006076	CB 225/12.5 NATUR	D.98
7940006077	CB 225/12.5 BLACK	D.98
7940006078	CB 500/12.5 NATUR	D.98
7940006079	CB 500/12.5 BLACK	D.98
7940006082	CB 850/12.5 NATUR	D.98
7940006085	CB 1000/12.5 BLACK	D.98

We cannot guarantee that there are no mistakes in the publications or software provided by us to the customer for the purpose of making orders. We try our best to quickly correct errors in our printed media.

All orders are based on our general terms of delivery, which can be reviewed on the websites of our group companies where you place your order. On demand we can also send the general terms of delivery to you.

Weidmüller – Your partner in Industrial Connectivity

As experienced experts we support our customers and partners around the world with products, solutions and services in the industrial environment of power, signal and data. We are at home in their industries and markets and know the technological challenges of tomorrow. We are therefore continuously developing innovative, sustainable and useful solutions for their individual needs. Together we set standards in Industrial Connectivity.

aps

apsindustrial.com.au

Sales: 1300 309 303
Sales Fax: 1300 309 308

CONNECT WITH US

MELBOURNE
Ph: (03) 8514 3500
Fax: (03) 8514 3510

SYDNEY
Ph: (02) 8898 6200
Fax: (02) 8898 6202

BRISBANE
Ph: (07) 3899 1322
Fax: (07) 3899 1422

ADELAIDE
Ph: (08) 8111 5100
Fax: (08) 8111 5105

PERTH
Ph: (08) 9249 9155
Fax: (08) 9249 9418

Weidmüller Interface GmbH & Co. KG
Klingenbergstraße 16
32758 Detmold, Germany
T +49 5231 14-0
F +49 5231 14-292083
info@weidmueller.com
www.weidmueller.com

Your local Weidmüller partner can be found on our website:
www.weidmueller.com/countries

Made in Germany

4 050118 406702

Order number: 2028760000/11/2016/SMKD